NASA SP-60

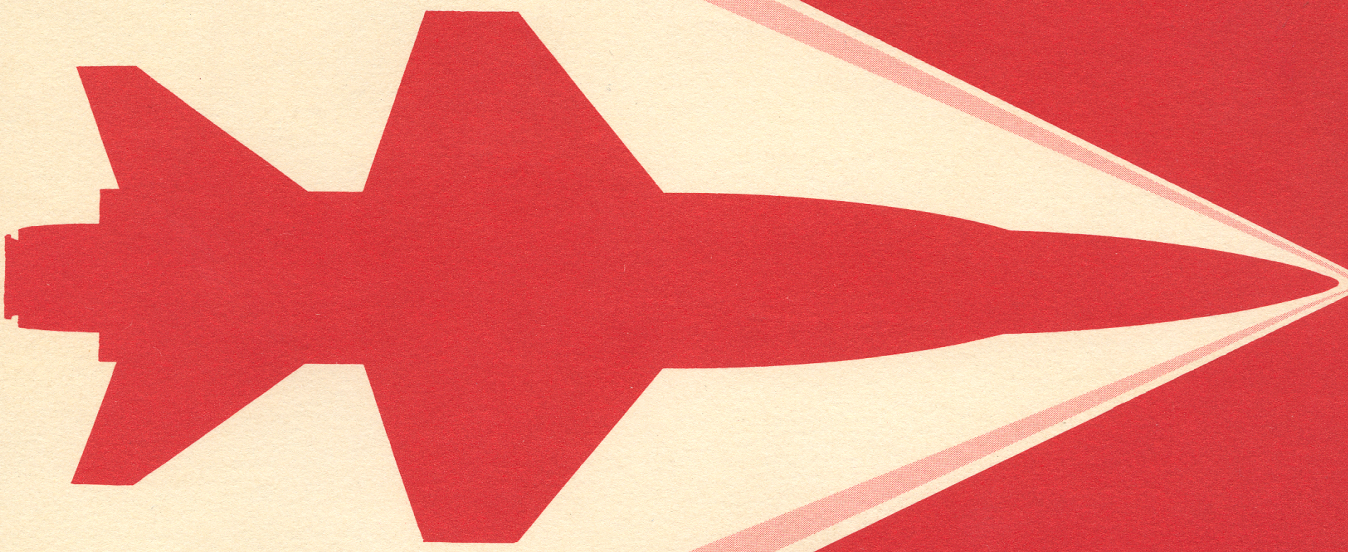

X-15 RESEARCH RESULTS

With a Selected Bibliography

NATIONAL AERONAUTICS AND SPACE ADMINISTRATION

NASA SP-60

X-15 RESEARCH RESULTS
With a Selected Bibliography

By Wendell H. Stillwell

Scientific and Technical Information Division
NATIONAL AERONAUTICS AND SPACE ADMINISTRATION

1965

Washington, D.C.

For sale by the Superintendent of Documents, U.S. Government Printing Office, Washington, D.C., 20402-Price 55 cents

Foreword

IN A PERIOD of a little more than sixty years since the first flight of the Wright Brothers, man's exploration of three-dimensional space above the surface of the Earth has extended beyond the atmosphere. Spectacular and exciting events in this dramatic quest have been well publicized. Behind these milestones of practical flight have been less publicized achievements in scientific research, making such progress possible. Although the X–15 has had its share of newsworthy milestones, its contributions to scientific research have been a more essential and more meaningful part of the program from its inception. This semi-technical summary of the X–15 program is directed toward the less publicized aspects of its achievements.

The year 1964 marks the tenth anniversary of the inception of the X–15 flight-research program, the fifth year since the first X–15 flight. When the program was first approved, its objectives were clearly stated in terms of aerodynamic heating, speed, altitude, stability-and-control research, and bioastronautics. Although these objectives have been essentially accomplished, it now appears that the three X–15's may be flown for perhaps another five years, in a new role as test beds for fresh experiments utilizing the X–15 performance, which still offers more than twice the speed and three times the altitude capability of any other aircraft now in existence.

Even though the program has been most successful in terms of achieving its planned objectives and is continuing to play an important role in aerospace research, many notable benefits have been of a different nature—more intangible and somewhat unforeseen at the time the X–15 program was approved. In the early years of our nation's space program, which has been based to a large extent on the unmanned-missile technology that had been developed over the five years prior to Project Mercury, the X–15 has kept in proper perspective the role of the pilot in future manned space programs. It has pointed the way to simplified operational concepts that should

provide a high degree of redundancy and increased chance of success in these future missions. All of the people in industry and in government who have had to face the problems of design and of building the hardware and making it work have gained experience of great value to the more recent programs now reaching flight phase and to future aeronautical and space endeavors of this country.

The X–15 program and Project Mercury have represented a parallel, two-pronged approach to solving some of the problems of manned space flight. While Mercury was demonstrating man's capability to function effectively in space, the X–15 was demonstrating man's ability to control a high-performance vehicle in a near-space environment. At the same time, considerable new knowledge was obtained on the techniques and problems associated with lifting reentry.

Already the lessons learned are being applied to our new manned space programs. The pilot is playing a much greater role in these programs. Certainly the problem of launching the lunar-excursion module from the surface of the Moon through the sole efforts of its two-man crew must appear more practical and feasible in the light of the repeated launchings of the X–15 through the efforts of its pilot and the launch operator on the carrier B–52 than would be the case if it were compared only with the elaborate launch procedures and large numbers of people, buried safely in blockhouses, that typify all other launch operations to date. Future space programs may well include a lifting reentry and a more conventional landing on Earth, in the fashion demonstrated by the X–15.

Edwards, California
November 1, 1964

Paul F. Bikle, *Director*
NASA Flight Research Center

Contents

CHAPTER		PAGE
	Foreword	*iii*
	Chronology	*vi*
1	The Role of the X–15	*1*
2	The First Hypersonic Airplane	*9*
3	Developing a Concept	*17*
4	Flight Research	*33*
5	Aerodynamic Characteristics of Supersonic-Hypersonic Flight	*47*
6	A Hypersonic Structure	*59*
7	The Dynamics of Flight	*71*
8	Man-Machine Integration	*83*
9	A Flying Laboratory	*95*
	Bibliography	*103*
	Index	*117*

Chronology

June 1952 NACA Committee on Aerodynamics recommends increase in research dealing with flight to Mach 10 and to altitudes from 12 to 50 miles. Also recommends that NACA endeavor to define problems associated with space flights at speeds up to the velocity of escape from Earth's gravity.

July 1952 NACA Executive Committee adopts recommendations of Committee on Aerodynamics.

September 1952 Preliminary studies of research on space flight and associated problems begun.

February 1954 NACA Research Airplane Projects panel meeting discusses need for a new research airplane to study hypersonic and space flight.

March 1954 Laboratories requested to submit views on most important research objectives and design requirements of a new research airplane.

May 1954 NACA teams establish characteristics of a new research airplane, which subsequently becomes the X–15.

July 1954 Proposal for new research airplane presented to the Air Force and Navy.

December 1954 Memorandum of understanding for a "Joint Project for a New High-Speed Research Airplane" signed by representatives of the Air Force, Navy, and NACA.

December 1954 Invitations issued by the Air Force to contractors to participate in the X–15 design competition.

September 1955 North American Aviation, Inc., selected to develop three X–15 research airplanes.

February 1956 Reaction Motors, Inc., awarded development contract for XLR–99 rocket engine.

December 1956 X–15 mock-up completed.

September 1957 Design configuration set. Construction starts.

October 1958 Factory rollout of No. 1 airplane.

June 8, 1959 First glide flight, No. 1 airplane.

September 17, 1959 First powered flight, No. 2 airplane.

November 15, 1960 First flight with XLR–99 engine.

February 7, 1961 Last flight with interim rocket engine.

March 7, 1961 First flight to Mach 4.

June 23, 1961 First flight to Mach 5.

October 11, 1961 First flight above 200 000 ft.

November 9, 1961 First flight to Mach 6.

December 20, 1961 First flight of No. 3 airplane.

July 17, 1962 First flight above 300 000 ft.

November 9, 1962 No. 2 airplane damaged during emergency landing.

June 27, 1963 50th flight over Mach 4.

January 28, 1964 100th flight in series.

June 25, 1964 First flight of rebuilt No. 2 airplane.

August 12, 1964 50th flight over Mach 5.

August 14, 1964 75th flight over Mach 4.

October 15, 1964 50th flight by No. 1 airplane; 119th flight in program.

CHAPTER 1

The Role of the X–15

NOT SINCE THE WRIGHT BROTHERS solved the basic problems of sustained, controlled flight has there been such an assault upon our atmosphere as during the first years of the space age. Man extended and speeded up his travels within the vast ocean of air surrounding the Earth until he achieved flight outside its confines. This remarkable accomplishment was the culmination of a long history of effort to harness the force of that air so that he could explore the three-dimensional ocean of atmosphere in which he lives. That history had shown him that before he could explore his ethereal ocean, he must first explore the more restrictive world of aerodynamic forces.

Knowledge about this world came as man developed theories and experimental techniques that helped him understand the complex reaction of air upon a vehicle moving through it. One of the earliest theories came from Leonardo da Vinci, who sought to explain the flight of birds. It was Sir Isaac Newton who, among his many achievements, first put a possible explanation for aerodynamic forces into mathematical form. Later, crude experiments began to provide measurable answers to supplement the theories of airflow. Sometimes the theories failed to stand up in the light of experimental evidence. Often both theory and experiment gave incomplete answers.

But man learned to apply this knowledge. Whenever enough theory was available to answer some questions and enough experimental evidence was at hand to answer others, he has advanced in flight, often past his full understanding of how he did it. While the Wright Brothers had learned many answers before their first flight, men were still trying to discover all the theories that explained it

long after it was history. Every pioneering flight stimulated the building of other airplanes, and further theoretical and experimental studies. From all of these efforts has come the detailed understanding of the aerodynamics of flight so necessary as the firm foundation upon which aviation progress has been built.

Nowhere is the durability of this foundation more evident than in the most advanced airplane in the world, the X–15 rocket airplane. For the mathematical theory that Newton published in 1726—long discounted because it couldn't be applied to airflow at low speeds—is now used to help understand the aerodynamic forces encountered by the X–15 at speeds of 4000 miles per hour.

The X–15 program is adding to the historic foundation of aerodynamics, sometimes measurably, often intangibly, in ways as yet unrealized. Not only has it doubled the speed of piloted flight; it has prepared the way for non-orbiting flight into space. It has pushed piloted flight to an altitude of 67 miles, above 99.999 percent of the atmospheric ocean. Although the X–15 has provided much new knowledge about this once-feared region, its return journey from there has proved even more fruitful. Reentry compounds the effects of aerodynamic and space flight with a maneuver that is more demanding of both pilot and aircraft than any heretofore encountered. Yet, though severely taxing, reentry flight has been mastered, and many previous unknowns no longer remain.

Today, after 120 flights, and accumulated flying time of two hours at speeds above 3000 mph, the three X–15 airplanes show the effects of having pushed past man's complete understanding. Wrinkles and buckles mar the once-sleek fuselages. Gaps have been cut elsewhere. Scars are visible where the skin of the wings has been hammered back in place. The three X–15's appear old and tired after many pioneering flights. One of them has a vertical tail with a razor-sharp leading edge, a radical departure from the others. None of them has the vertical tail with which it first flew. Other changes are hidden, such as the added structure that stiffens the fuselage and vertical tail, and the electronics that now help operate the controls.

The changes came from broad-scale attacks, carried out in three phases. The first comprised the early flights, which explored the boundaries of the major research areas. The second consisted of methodical flights to fill in necessary details. Most of this is now

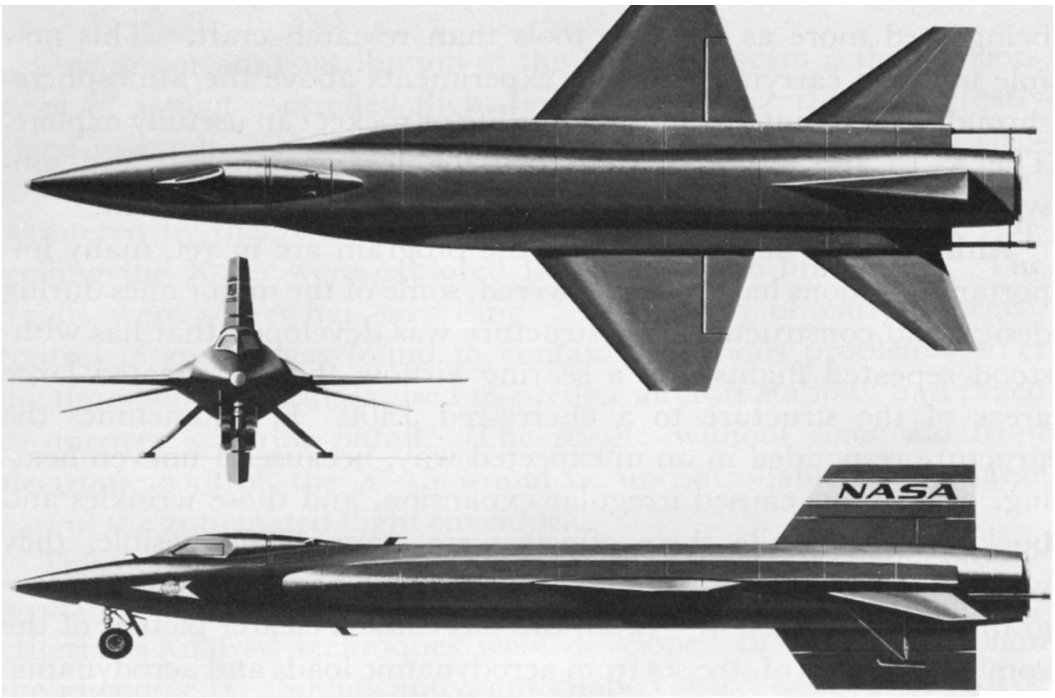

Three views of the X–15's original configuration, with which it achieved a maximum speed of Mach 6.06 and a maximum altitude of 354 200 ft. Its launch weight was 33 000 lb.; landing weight, 14 700 lb. The lower half of its vertical tail had to be jettisoned before landing, since, as the little head-on view makes clear, it otherwise would have protruded below the landing gear when the latter was extended.

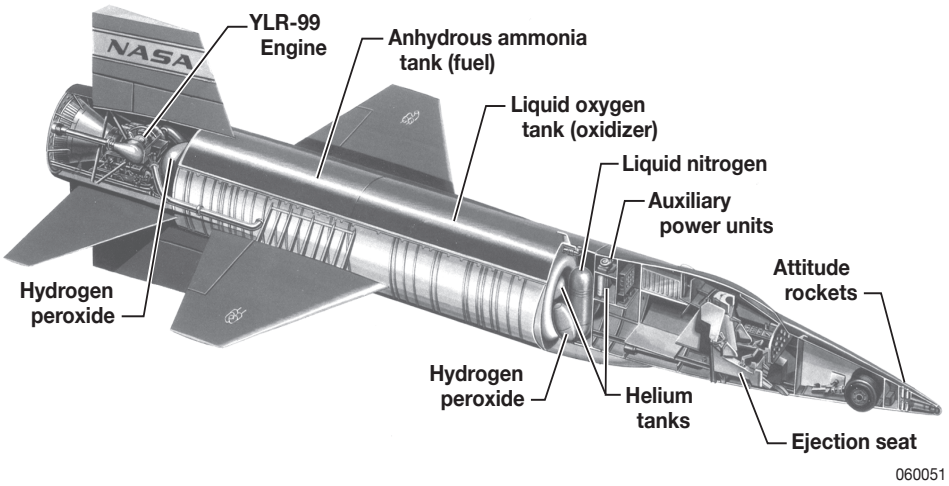

This cutaway drawing reveals the volume of tankage needed to give the X–15 its dazzling propulsion, its pressurization, and its attitude control in space. Liquid-oxygen capacity, 1003 gal.; anhydrous-ammonia capacity, 1445 gal.

history. In the third, and current, phase the X–15 airplanes are being used more as research tools than research craft. This new role includes carrying scientific experiments above the atmosphere-shrouded Earth into regions no satellite or rocket can usefully explore. The X–15 also serves as a test bed for new components and subsystems, subjecting them to a hypersonic flight environment.

Although not all the results of the program are in yet, many important questions have been answered, some of the major ones during design and construction. A structure was developed that has withstood repeated flights into a searing airflow that has heated large areas of the structure to a cherry-red 1300° F. Sometimes the structure responded in an unexpected way, because of uneven heating. Hot spots caused irregular expansion, and those wrinkles and buckles. But while these effects were dramatically visible, they were always localized and merely slowed the pace of the flight program, never stopped it. From this has come a clearer picture of the combined effects of stresses from aerodynamic loads and aerodynamic heating.

It has also shown the interplay between airflow, elastic properties of the structure, and thermodynamic properties of air. The X–15 is the first airplane to push from supersonic speeds to hypersonic speeds, where the river of airflow heats leading edges to 1300° F. It provided the first full-scale hypersonic flight data to researchers who had been concerned with hypersonic theory but who had been limited to the cold-flow results of existing ground facilities. Those cold results had produced little agreement among the several theories for predicting heat flow into an aircraft structure.

From the X–15 data, researchers discovered that theories and experimental techniques were considerably in error. This significant result started detailed measurements and analysis of the airflow nearest the external skin, trying to find the reason. Although the complete story of heat flow is known only in a general way, available theories have been modified so as to yield dependable predictions for it at hypersonic speeds.

In addition, the forces that support, slow down, and stabilize the X–15 can be reliably calculated. The X–15 data have also shown that small-scale wind-tunnel tests accurately forecast full-scale aerodynamic forces, with but minor exception. This increased researchers' confidence in these experimental tools.

Significant Help From Flight Simulator

One important contribution of the X–15 program is the development of a pilot-controlled flight-simulation device that has greatly aided research. This device combines aerodynamics with an electronic computer so as to simulate any flight condition likely to be encountered by the X–15. With it, many of the unknowns of controlling the X–15 were explored long before the first flight. The results were somewhat surprising. The region of early concern, control in space, was found to contain no serious problems. Yet the time-honored criteria used to predict aircraft stability had failed to uncover a major pitfall. The result: without some aid from electronic control, the X–15 would be uncontrollable over a large part of the anticipated flight envelope.

This major obstacle was overcome, but not without changes to the airplane's tail surfaces and control system as well as to its stability criteria. Analysis techniques were developed that helped explain the phenomena. Significantly, automatic control came to be looked upon not as a replacement for the pilot but as a useful, helpful, even necessary aid, without which the full potential of the X–15 would not have been achieved.

In addition to contributing to high-speed flight, the X–15 program lowered a barrier at the low-speed end of the flight, for the subsequent landing. This landing was expected to be critical, since it would require such precise judgment and control by the pilot that he would have no margin for error. But techniques were developed that gave back to the pilot enough margin so that the landing is now a routine maneuver. Pilots and aerodynamicists now plan with confidence the landing of future airplanes that will have even more extreme landing characteristics.

The X–15 pilots removed one earlier barrier, a psychological one. When some scientists looked spaceward, they became concerned that man himself would be the limiting factor. Indeed, in the missile dawn of the early 1950's, a large segment of the aeronautical industry began to speculate that man might soon be relegated to pushing buttons. No one working on the X–15 project agreed with this view, least of all the pilots. They viewed hypersonic and space flight as a demanding expansion of previous flight experience, not a radical departure. Now, 120 flights have shown us that this traditional

concept for piloted flight research, while needing some modification, is also applicable to the space era. Many now wish that all the X–15 components would exhibit the same steady, competent reliability that the pilots do.

Perhaps the X–15's most significant role has been to sustain interest in manned, maneuverable flight in high-speed aircraft during a period when the world's gaze turned to orbital space flight. The existence of this active program stimulated creative thought and focused attention on the future of hypersonic aircraft in the rapidly advancing age of space travel. Now that men have begun long-range planning of the nation's space program, they envision daily shuttle runs to orbital space laboratories and foresee the need for efficient, reusable space ferries to cross the aerodynamic river. Scientists now talk of two-stage rocket planes and recoverable boosters. Also proponents of the two principal means for orbital and super-orbital reentry—ballistic capsule and lifting body—are coming closer together, for the force that brakes a capsule can be utilized for maneuvering, as the X–15 has proved. Although the stubby wings of the X–15 may look rather puny, many space officials believe they point the way to the future. Thus the X–15 and Mercury programs are seen, in retrospect, as having made a valuable two-pronged contribution to future manned space flight.

Many strong building blocks have come from the experience of doing-the-job; from learning safe operational techniques and flight procedures; from gaining experience with piloted hypersonic flight and non-orbiting space flight as well as with the intricacies of missile-type operations with large rocket engines and a two-stage aerospace-booster configuration. This is knowledge that may someday pay off in unexpected ways.

But if the X–15 program has been the source of much new knowledge, it is because there were many unknowns when this bold program was undertaken. A large measure of the success of the program is due to the individuals of extraordinary vision who had the resolution to push ahead of these unknowns. They were men who were prepared to take giant steps, sometimes falteringly, not always successfully, but eventually yielding results. They were men who knew that the foundations upon which the X–15 would be built were sound, yet knew they couldn't wait for all the answers before going ahead. They knew that to go ahead with incomplete

knowledge would invite failure, and that technological barriers can become psychological barriers as well. They had no intention of trying to batter down these barriers. They knew that measurable contributions would come from studying and probing until enough unknowns were removed so that they could ease their way through to the next obstacle. For they had their sights set way ahead of the X–15, to its successor, and another.

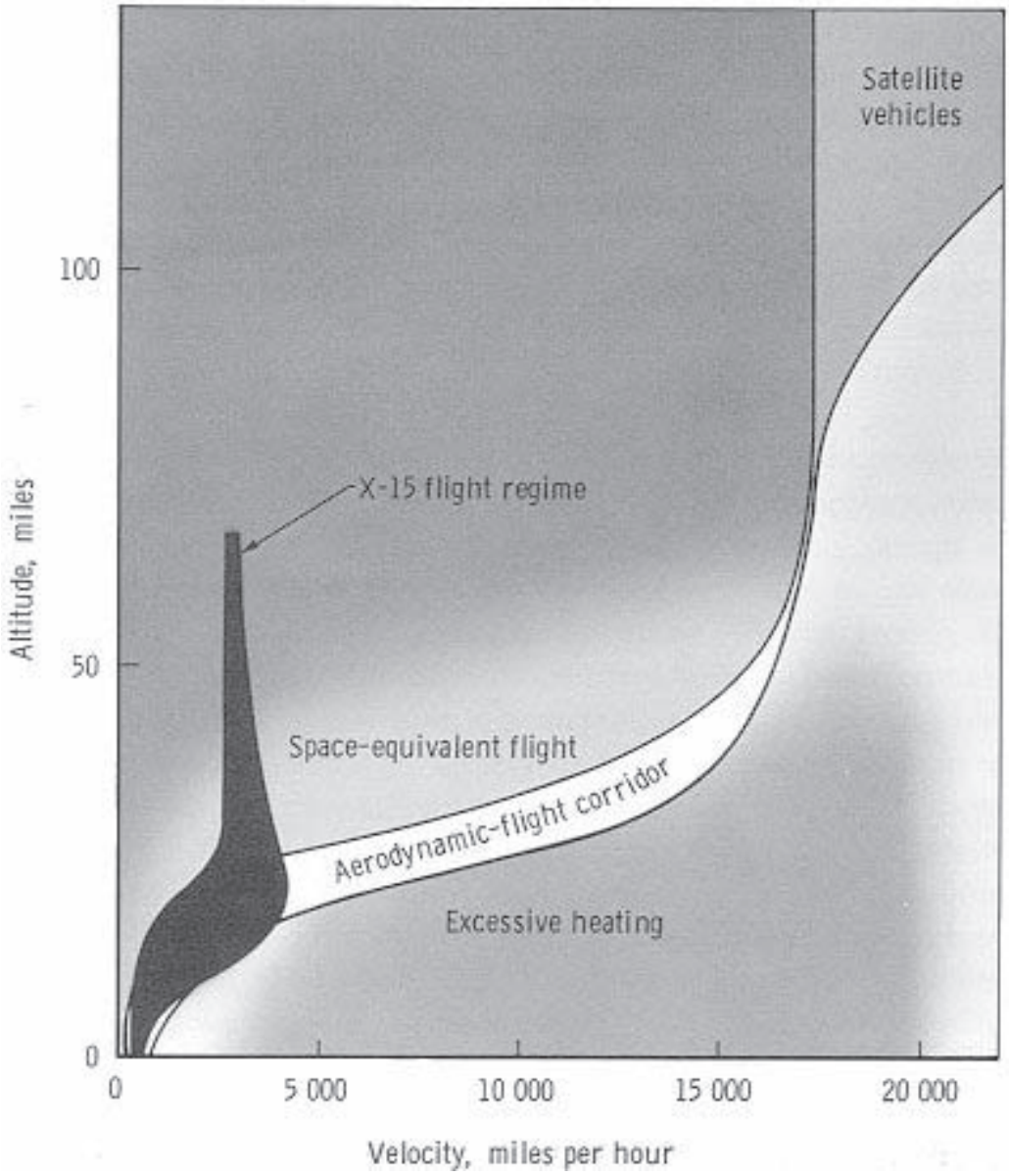

This diagram shows how the X–15 has explored the aerodynamic-flight corridor to a speed of 4000 mph and the space-equivalent region above it to an altitude of 67 miles. The aerodynamic-flight corridor is the pathway that reentry spacecraft of the lifting-body type would use to return to Earth from orbital space stations.

From their stimulus, the United States acted, and acted fast. Initiated as a matter of national urgency, the program emerged from behind security restrictions to become intimately associated with national prestige. Today, a successor is still many years away, and the X–15 remains the only aircraft capable of studying phenomena at hypersonic speeds, space-equivalent flight, and reentry flight. And it has gained a new role as a workhorse. Rarely has a research program encompassed so many fields of basic and applied science, and less often still has any been able to contribute for such a long period in a fast-advancing technological age. Yet, just as the Wright Brothers left many questions unanswered, today, long after the X–15 first flew 4000 mph, men are still trying to find a complete explanation for airflow. But as long as Earth's atmosphere exists, whenever men fly that fast, they will be traveling in a region whose secrets the X–15 was first to probe.

CHAPTER 2

The First Hypersonic Airplane

THROUGH TWO HUNDRED YEARS of analysis and experiment, scientists and engineers have slowly accumulated a detailed picture of flight through our atmosphere. They know that at high speeds the dense layer of air close to the Earth's surface generates pressures that hinder an aircraft, while at high altitudes the air density is so low that extremely fast speeds are necessary to generate enough pressure to keep a plane flying. They designed airplanes as a compromise between these forces, and flight became confined to a corridor that is bounded by ever-increasing combinations of altitude and velocity.

As man pushed aircraft farther up this flight corridor, the problems began to multiply. New aerodynamic knowledge and new scientific disciplines had to be added to the world of airflow. The concept of the atmosphere as a single gaseous envelope gave way to one that recognized it as a series of layers, each with its own characteristics. Airflow, too, was found to have distinct regions and characteristics. At velocities less than 500 mph, it is tractable and easily defined. At higher speeds, its character undergoes marked change, sometimes producing abrupt discontinuities in aerodynamic pressures. Even before man's first flight, the noted German physicist Ernst Mach had shown that a major discontinuity occurs when the velocity of airflow around an object approaches the speed of sound in air (760 mph at sea-level pressure and temperature). Later work showed that the air pressures an airplane experiences vary with the ratio of velocity of airflow to speed of sound, and scientists adopted this ratio, called Mach number, as a measure of the flow conditions at high speeds.

The effect of flight to Mach 1 produces large changes in the air pressures that support, retard, twist, pitch, roll, and yaw an airplane. But man edged past this speed into the realm of supersonic flight, and by the time Mach 1.5 was attained, airplanes had undergone a vast transition in technology. Some men saw in this transition

the basis for pushing much farther up the flight corridor. In the early 1950's, a few visionary men looked far up that corridor and became intrigued by a goal much closer than the theoretical limit at the speed of light. They saw that the corridor flared dramatically upward at orbital speed (Mach 24), leading out of the Earth's atmosphere into space, defining the start of a path to the Moon, Mars, and beyond.

But if their gaze was on orbital flight, their minds were on a torrent of new problems that had to be overcome to achieve it. The supersonic-flight region led into hypersonic flight—a fearsome region with a thermal barrier, which looked far more formidable than had the earlier, sonic barrier. This new barrier came from the friction of air as it flows around an aircraft. At Mach 10, that friction would make the air hot enough to melt the toughest steel. At Mach 20, the air temperature would reach an unbelievable 17 000° F. Thus aerodynamic heating was added to the growing list of new disciplines.

Other new problems came into view. Flight above the atmosphere would render aerodynamic controls useless, requiring another method of control. The pilot's response to the weightlessness of orbital flight was a controversial subject. Some expressed grave doubts that he could withstand prolonged periods of orbital flight. The reentry into the atmosphere from space would perhaps compound all of the problems of hypersonic flight and space flight. Yet these problems were academic unless powerplants an order of magnitude more muscular than were then available could be developed to propel an aircraft into space. Little wonder, therefore, that the pioneers envisioned a slow and tortuous route to reach their goal. They had yet to realize that manned orbital flight was possible in one big jump, through the wedding of large ballistic missiles and blunt reentry capsules.

The vision of these men, however, began to stimulate thought and focus interest within the aeronautical community on the prospects for orbital flight. Early studies showed that much could be learned about space flight without achieving orbital speeds. By zooming above the normal flight corridor at less than orbital speeds, one could study non-aerodynamic control and weightlessness. Reentry from such a maneuver would approximate reentry from space. Perhaps more significant was the fact that if a speed of Mach 8–10 could be achieved, aerodynamics would be over the hump of hyper-

sonic flow, for air pressures show far less variation above this speed than below.

The initial investigative work was guided by extensive theoretical analysis and ground-facility experiments, but critical problems abounded and possible solutions were largely speculative. Theoretical methods approximated an airplane as a cone and cylinder, with wings composed of flat plates. While these theories agreed with some of the results of wind-tunnel experiments, there were many disagreements. There were doubts about the accuracy of wind-tunnel measurements, because of their extremely small scale. Although large hypersonic tunnels were being developed, an airplane had already flown faster than the top speed that could be duplicated in any wind tunnel big enough for reliable development-testing. Many of the pioneers became convinced that the best way to attack the many unknowns would be to meet them head-on—in full-scale flight research. They pressed for an airplane to make the first step into the hypersonic, space-equivalent, and reentry flight regimes, to lay the groundwork for following airplanes. A decisive influence was the fact that rapid progress was already being made on the development of powerful, liquid-fueled rocket engines, though they were not intended for airplanes.

Among the several visionary men of the era, the late Robert J. Woods, of Bell Aircraft Corp. (now Bell Aerospace Corp.), was outstanding. His efforts to "sell" manned space flight began in June, 1952, some five years before the Earth's first artificial satellite appeared. In a bold proposal, he urged the United States to "evaluate and analyze the basic problems of space flight . . . and endeavor to establish a concept of a suitable test vehicle." One important and, to Woods, fundamental part of his recommendation was that the (then) National Advisory Committee for Aeronautics should carry forward this project. NACA was a government organization (later forming the nucleus of the National Aeronautics and Space Administration) that had long been in the forefront of high-speed aeronautical research. Many of the foremost proponents of hypersonic flight were on its staff. NACA had also coordinated aeronautical technology among the military services, civil aviation, and aircraft industry, and was responsive to their respective needs. NACA was most active and eager for a bold step into hypersonic flight.

Basic Studies Began in 1954

But at a time when the current struggle was to push aircraft speeds from Mach 1.5 to 2.0, two more years elapsed before a climate developed in which the urgency for hypersonic flight was backed up by resources of money and manpower. In March, 1954, NACA's Langley Aeronautical Laboratory, Ames Aeronautical Laboratory, and High Speed Flight Station began the studies that led to the X–15 program. This early work was the first to identify all major problems in detail and examine feasible solutions. Only then could the researchers decide how big their first step should be.

They knew at once that Mach 8–10 was unobtainable. Materials and technology were not available for such speeds. But the work of the Langley Laboratory showed that Mach 6–7 was within reach, as well as an altitude of 250 000 feet, well above the conventional flight corridor. And, of course, even Mach 6 was a giant step. To attain this speed would require a rocket engine of 50 000-pounds thrust and a weight of propellants 1½ times the weight of the basic airplane. These were difficult goals, but within the state of the art.

The major problems would be to achieve a configuration that was stable and controllable over the entire range of speed and altitude, and prevent it from being destroyed by aerodynamic heating. The stability-and-control problem appeared to be solvable, although a few innovations would be required. Most importantly, the Langley study pointed to a way through the thermal barrier. It showed that if the airplane were exposed to high-temperature airflow for only a brief period of time, its structure could be designed to absorb most of the heating, and temperatures could be restricted to a maximum of about 1200° F. This concept of a "heat sink" structure was based upon use of a new high-temperature nickel-chrome alloy, called Inconel X by its developer, the International Nickel Co. Inconel X would retain most of its strength at 1200° F, a temperature that would melt aluminum and render stainless steel useless. However, no manufacturer had ever made an aircraft of Inconel X.

The Langley study influenced the X–15 program also through its somewhat philosophical approach to the craft's development and method of operation. In the view of the Langley study team, any new airplane should be a flight-research tool to obtain a maxi-

mum amount of data for the development of following airplanes. The design, therefore, should not be optimized for a specific mission, but made as useful as possible for exploratory flight—a rather vague criterion. A tentative time limit of only three years was set for the design and construction, in order that flight data could be obtained as soon as possible. Such a tight schedule established the need for somewhat of a brute-force approach. The design must stay within the state of the art and avoid the use of unconventional techniques that would require long development time. Other Langley guidelines specified the use of proven techniques as far as possible, and "the simplest way to do the job." They emphasized that the airplane should not become encumbered with systems or components not essential to flight research. These requirements were tempered by knowledge that a three-year development schedule would leave little or no time to perfect systems and subsystems before first flight.

The design philosophy was also influenced by the fact that new aerodynamic regimes were to be explored in a carefully regulated, progressive manner, thus gradually exposing the airplane and pilot to any critical condition for which complete data might have been impossible to obtain during the speeded-up design period. Significantly, early plans were for the flight program to be conducted by NACA's High Speed Flight Station (now NASA's Flight Research Center) at Edwards, California, which at that time functioned as a part of the Langley Laboratory at Hampton, Virginia, though separated from it by some 2300 miles. This close tie brought into the program at the very beginning the viewpoints of the research pilots who would fly the X–15.

An important figure in the over-all coordination was H. A. Soulé, of the Langley Laboratory, who had directed NACA's part in the research-airplane program since 1944. He and his chief associates would steer the X–15 program through the conceptual studies and the design and construction phases with one goal: to develop a satisfactory airplane in the shortest practical time. This meant severe pruning of a multitude of proposed engineering studies, every one of which could be justified in the cause of optimization, but which together could lead to fatal over-engineering in the effort to achieve an ideal aircraft. It also meant stern attention to the progress of selected studies. Mr. Soulé's task was complicated by the

fact that the interests of other government organizations would have to be served at the same time, since NACA's resources were too meager to enable it to undertake such an ambitious program alone.

By the fall of 1954, a technical proposal and operational plan had been formulated and presented to several government-industry advisory groups on aviation. NACA proposed that the new program should be an extension of the existing, cooperative Air Force-Navy-NACA research-airplane program. This joint program, which dates from 1944, had resulted in the well-known first flight to Mach 1, by the X–1 rocket airplane; the first flight to Mach 2, by the D–558–II rocket airplane; and the first flight to Mach 3, by the X–2 rocket airplane. Less well-known are 355 other rocket-airplane flights and more than 200 jet-airplane flights made under this program. These were flights that in 1947 helped lay bare some of the problems of transonic flight, at speeds now commonplace for jet transports. These flights also laid the technical and managerial foundations for the X–15 program, and led to its immediate and full support by the United States Air Force, Navy, and Department of Defense.

Because of the magnitude of the new research-airplane program, a formal Memorandum of Understanding was drawn up among the Air Force, Navy, and NACA, setting the basic guidelines upon which the program operates to this day. A distinctive feature of the memorandum is that it is not just a definition of the lines of authority and control. Rather, it lays out a fundamental pattern of cooperation among government agencies that continues as a basic feature of the X–15 program, and has had no small effect on the successful pursuit of the research. In essence, it states briefly that each partner agrees to carry out the task it is best qualified for.

The Memorandum of Understanding may also be the only place where the true purpose of the X–15 program is spelled out. This is contained in a specific provision for disseminating the results of the program to the U.S. aircraft industry. It adds that the program is a matter of national urgency.

This urgency was already obvious. In less than 10 months from the time NACA initiated the study to determine if hypersonic flight was feasible, a detailed program had been submitted to the aircraft industry, and several firms were already making preliminary design studies for flight to Mach 6–7. This rapid progress, perhaps more

Noted predecessors of the X–15 in the cooperative research-airplane program of the Air Force, Navy, and NACA, dating from 1944, were the X–1 (above), which made the world's first supersonic flight, and the X–2 (below), which first flew to Mach 3.

than any other factor, tells of the invisible pressure that had resulted from the stimulus of the strong individuals who pioneered the X–15. A national program to develop the world's first hypersonic airplane was underway.

CHAPTER 3

Developing a Concept

WHEREAS THE COMPLETE DEVELOPMENT of the first powered aircraft was carried out by two men, the complexities of a modern aircraft require a ponderous procedure to shepherd it from technical proposal through design and construction and to provide support during its flight program. For the X–15, this shepherding role has been provided by the Aeronautical Systems Division (formerly Wright Air Development Center) of the Air Force Systems Command. It has included research-and-development support not only for an airplane with revolutionary performance but also for the most powerful—and potentially most dangerous—powerplant ever developed for aircraft use. lt has encompassed new concepts for pilot protection, numerous first-time subsystems, modifications and support for two launch airplanes, and the eventual rebuilding of two of the original three X–15's. It will surely include other items as the program goes on.

A third partner joined the X–15 team when North American Aviation, Inc., won the design competition with other aircraft manufacturers. The proposal of the Los Angeles Division of NAA was chosen by joint Air Force-Navy-NACA agreement as "the one most suitable for research and potentially the simplest to make safe for the mission." The contract called for the construction of three aircraft, with the expectation that two would always be in readiness and one undergoing modification or repair. Two craft would have been enough to handle the anticipated research workload, but if there had been only two, a mishap to one of them—always a strong possibility in exploratory flight research—would have seriously curtailed the program.

Although NACA's studies showed possible solutions for many of the major problems, it remained for one of America's crack design groups actually to solve them. And it is also true in any ambitious

endeavor that the magnitude of a problem seldom becomes fully apparent until someone tries to solve it. The basic problem North American faced was that of building an airplane of new materials to explore flight conditions that were not precisely defined and for which incomplete aerodynamic information was available. Yet it would have to accomplish this on an abbreviated schedule, despite an appalling inadequacy of data.

The original design goals were Mach 6.6 and 250 000 feet, but there were no restrictions to prevent flights that might exceed those goals. The flight program would explore all of the corridor to the maximum practical speed, and it would investigate the space-equivalent region above the corridor. The reentry maneuver would compound many factors. Both airplane and pilot would be subjected to acceleration forces of six times gravity (6 G's). The pilot would be required to maintain precise control during this period, with both airplane and control system undergoing rapid, large changes in response. These nice generalities had to be translated into hard, cold criteria and design data.

The development of any aircraft requires many compromises, since a designer seldom has a complete answer for every problem. If there are unlimited funds available to attack problems, an airplane can represent a high degree of perfection. But this process is also time-consuming. For the X–15 design, compromises were all the more inevitable and the optimization difficult. The X–15 would still be on the drawing boards if construction had been delayed until an ideal solution to every problem had been found. A reconciliation of the differing viewpoints of the several partners in the program was also necessary. While all were agreed on the importance of the program, their diverse backgrounds gave each a different objective.

In spite of differences, the project rolled ahead. In all of this, the overriding consideration was the brief time schedule. There literally was no room for prolonged study or debate. While three years may seem at first to be ample time in which to produce a new airplane, it must be remembered that simpler aircraft than the X–15 normally require longer than that for construction. For a new flight regime and use of a new structural material, the X–15 schedule was most ambitious. One important help in meeting it, however, was the initial decision to explore new flight regimes in a progressive manner, so that complete solutions for every problem need not be

found before the first flight. Not all could be put off until the flight program began, though.

The sum product of a year of study, a year of design, and a year of construction is an airplane that is a composite of theory, wind-tunnel experiments, practical experience, and intuition—none of which provides an exact answer. The X–15 represents an optimization, within limits, for heating, structure, propulsion, and stability. It is also a compromise, with many obvious and not so obvious departures from previous jet- or rocket-plane experience. The fuselage consists largely of two cylindrical tanks for rocket-engine propellants. To these were added a small compartment at the forward end, for the pilot and instrumentation, and another at the aft end, for the rocket engine. Large, bulbous fairings extend along the sides of the fuselage to house control cables, hydraulic lines, propellant lines, and wiring that has to be routed outside the tanks. The big fuselage-

An X–15 is seen just prior to launch from a B–52 at 45 000 ft., 200 miles from home base. The X–15 pilot und B–52 launch-panel operator have completed their pre-launch check procedures. The chase plane in the distance is keeping a sharp eye on the X–15 during the checkout.

fairings combination has a decided effect on the total aerodynamic lift of the X–15. The airflow near these surfaces provides well over half of the total lifting force, particularly at hypersonic speeds. Thus, the small size of the wings reflects the relatively small percentage of lifting force they are required to provide. (They do most of their work during launch and landing.)

The design of the structure to withstand hypersonic flight brought one of the prime purposes of the X–15 into sharp focus: to gain knowledge about heating and the hot structural concept. The structure could have been protected by insulation or cooling techniques that would have kept temperatures well below 1200° F. A basic feature of the X–15 concept, however, was that a hot structure would permit more to be learned about aerodynamic heating and elastic effects than one protected from high temperatures. Therefore, 1200° F became a goal rather than a limit.

The complicating factor was that loads and temperatures must be absorbed with a minimum of structural weight. Yet Inconel X weighs three times as much as aluminum, and any excess weight has a critical effect on the performance of a rocket airplane. Each 500 pounds cuts performance by 100 mph, and structural engineers strive to shave every ounce of extra material from the structure.

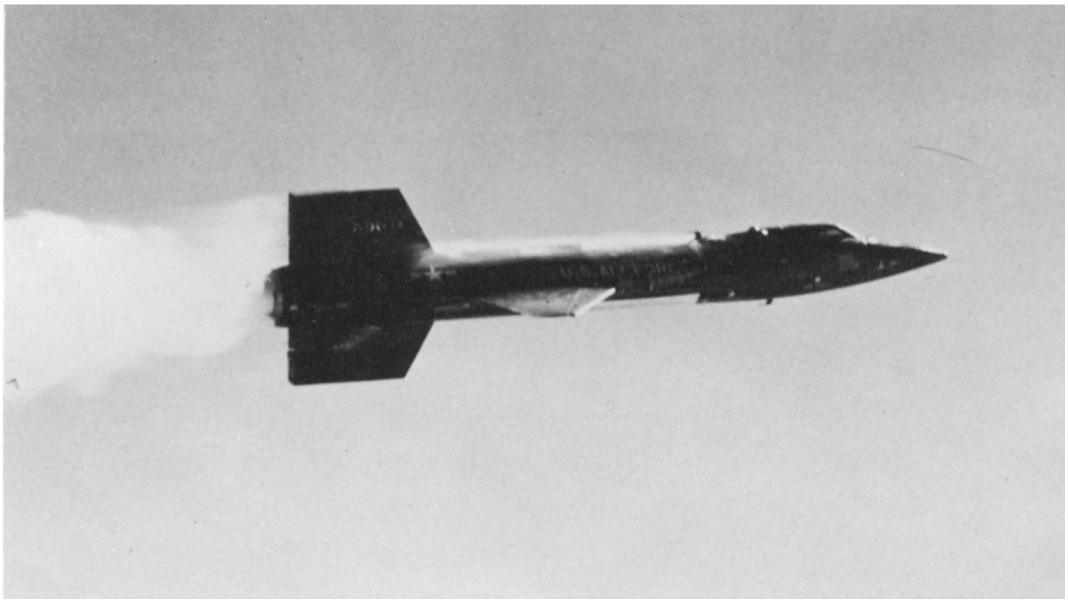

An instant or two after launch, the X–15 is seen roaring off on its own, with Inconel X skin glistening in the sun. At burnout, it will be accelerating at 4 G's, or 90 additional miles per hour every second.

This science, or art, had already advanced aluminum aircraft structures to a high level of load-carrying efficiency. There were always unpredictable, troublesome interactions, however, and structural designers usually relied upon laboratory tests to confirm each new design. Normal practice was to build one airplane that was statically loaded to the equivalent of anticipated flight loads, in order to evaluate its strength.

The X–15, however, would have to enter the high-load region without this time-honored test of its structure. The most severe stresses are encountered when the structure undergoes aerodynamic heating, and no static-test facility existed in which the X–15 could try out a realistic temperature environment. Therefore, a static-test airplane was not built, and no tests were made of actual structural components. But the structural design for the high-temperature condition wasn't left to analysis alone. An extensive testing program was conducted during the design to prove out the approaches being taken. Many tests were made of sections of the structure under high temperatures and thermal gradients. These helped define some of the difficulties and also improved static-test techniques.

NAA saved considerable weight through the use of titanium in parts of the internal structure not subject to high temperatures. Titanium, while usable to only about 800° F, weighs considerably less than Inconel X. The structural design was influenced to some extent by the requirements for processing and fabricating these materials. Inconel X soon stopped being just a laboratory curiosity. Production-manufacturing techniques were developed to form, machine, and heat-treat it. In many instances, an exhaustive development program was required just to establish the method for making a part. Thus much practical experience was gained in the design, fabrication, and testing of new materials.

Additional weight was saved on the X–15 by the use of a rather novel landing-gear arrangement. The main landing gear consists of two narrow skis, attached at the aft end of the fuselage and stowed externally along the side fairings during flight. When unlocked, the skis fall into the down position, with some help from airflow. A conventional dual-wheel nose gear is used. This gear is stowed internally to protect its rubber tires from aerodynamic heating.

Contrasting with the X–15's small wings are its relatively large and massive tail surfaces. These surfaces, like the fins on an arrow,

stabilize the craft in its flight. But, unlike an arrow, which ideally never veers from its path, the X–15 must be able to change alignment with the airflow, to maneuver and turn. And it is a most difficult design compromise to achieve the proper balance between stability and control. The problem in this case was greatly complicated by the different aerodynamic-flow conditions encountered within the flight corridor, and by the changes between the angle of airflow and the pitch and yaw axes required to maneuver the airplane. Criteria had been developed to guide the design, but they were derived largely from empirical data. They required considerable extrapolation for X–15 flight conditions.

Although the extrapolation in speed was rather large, the largest was in the extreme angle between pitch axis and flight path required for pullout during reentry. This results in a compounding problem, because it becomes increasingly difficult to stabilize an airplane at high angles of airflow (angle of attack) at high speed. A

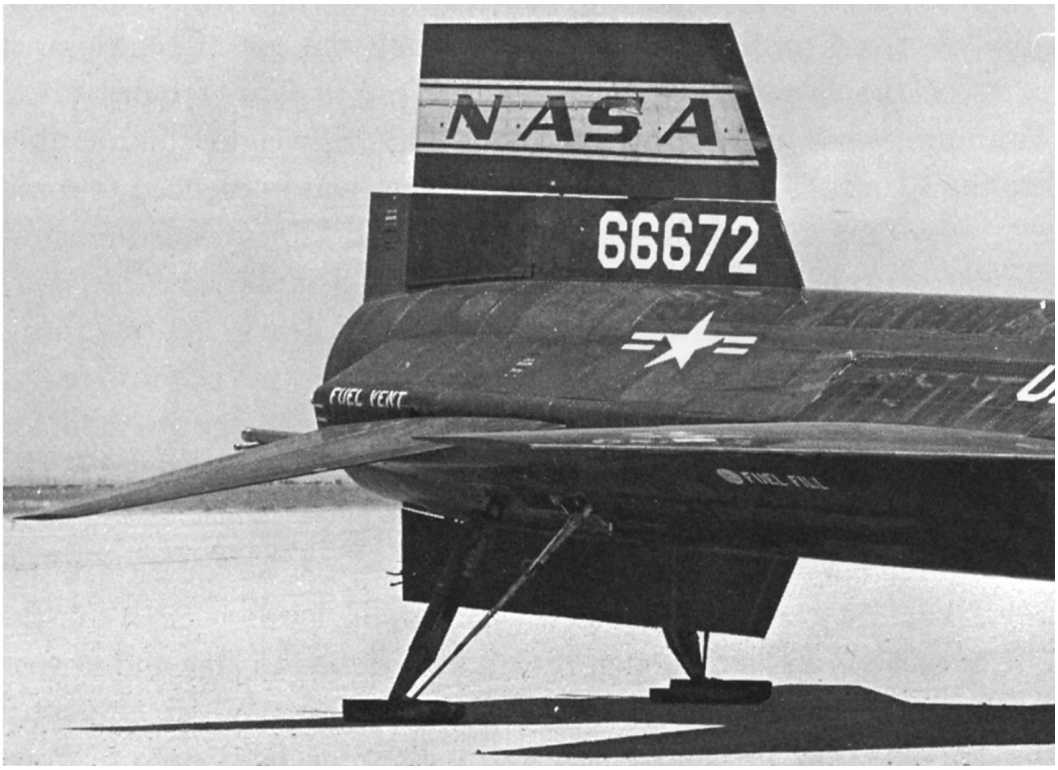

This photograph provides an unusually clear view of the X–15's unique main landing gear, and shows how much of the lower vertical tail is left after its bottom part has been jettisoned for landing. The photo also reveals the new, knife-sharp leading edge that has been given to the X–15–3 configuration's upper vertical tail in order to study heat transfer through 2500-deg. airflow.

phenomenon is encountered in which the vertical tail loses ability to stabilize the airplane and the nose tends to yaw. Indeed, the only previous airplanes that had been flown to Mach numbers above 2—the X–1A and X–2—had experienced such large decreases in stability that the pilots lost control (disastrously, in the case of the X–2) when they maneuvered the craft to angles of attack of only 5 or 6 degrees. Yet the reentry maneuver of the X–15 would normally require it to operate at an angle of attack of 20 to 25 degrees.

The initial solution, proposed by NACA, was found in the large, wedge-shaped upper-and-lower vertical-tail surfaces, which are nearly symmetrical about the aft fuselage. A wedge shape was used because it is more effective than the conventional tail as a stabilizing surface at hypersonic speeds. A vertical-tail area equal to 60 percent of the wing area was required to give the X–15 adequate directional stability. Even this was a compromise, though, for weight and different flight conditions. As an additional factor of safety, therefore, panels that could be extended outward, thus increasing the pressure and stabilizing forces, were incorporated in the vertical tails. These panels—another NACA proposal—also serve as speed brakes, and the pilot can use them at any time during flight. Both braking effect and stability can be varied through wide ranges by extension of the speed brakes and by variable deflection of the tail surfaces. The large size of the lower vertical tail required for adequate control at high angles of attack required provision for jettisoning a portion of it prior to landing, since it extends below the landing gear.

A disadvantage of the wedge shape is high drag, caused by airflow around its blunt aft end. This drag force, when added to the drag from the blunt aft ends of the side fairings and rocket-engine nozzle, equals the entire aerodynamic drag of an F–104 jet fighter.

Control for maneuvering flight is provided by partially rotatable horizontal-tail surfaces. Roll control is achieved by a unique mechanism that provides differential deflection of the left and right horizontal-tail surfaces. This somewhat unconventional control technique, called “rolling tail,” was unproven at the time of the X–15 design. However, NAA had studied such control systems for several years, its studies including wind-tunnel experiments from subsonic to supersonic speeds. Pitch control is provided by deflecting the left and right horizontal tails symmetrically.

The combination of large control surfaces and high aerodynamic pressures forced designers to use hydraulic systems to actuate the surfaces. This type of power steering introduces its own characteristics into aircraft-control response, as well as making the airplane

The blunt aft ends of the X–15's side fairings, vertical tails, and the rocket-engine nozzle represent one of the many compromises that a hypersonic configuration demanded. Together they produce as much drag as an F–104 jet fighter.

absolutely dependent upon the proper functioning of the hydraulic system. It did facilitate the incorporation of electronic controls, which were shown to be helpful to the pilot, especially during reentry. There had to be assurance, however, that a malfunction of any component during flight would not introduce unwanted control motions. Thus the design of the control system provided a safe alternative response in the event of any component failure as well as for normal operation. Many of the X–15's operating characteristics are similarly based upon fail-safe considerations.

A unique feature of the control system is the three control sticks in the cockpit. One is a conventional center stick, which controls the airplane in pitch and roll as it would in a jet fighter or a Piper Cub. The center stick is directly linked to one that is at the pilot's right side. The latter is operated by hand movement only, so the pilot's arm can remain fixed during high accelerations experienced

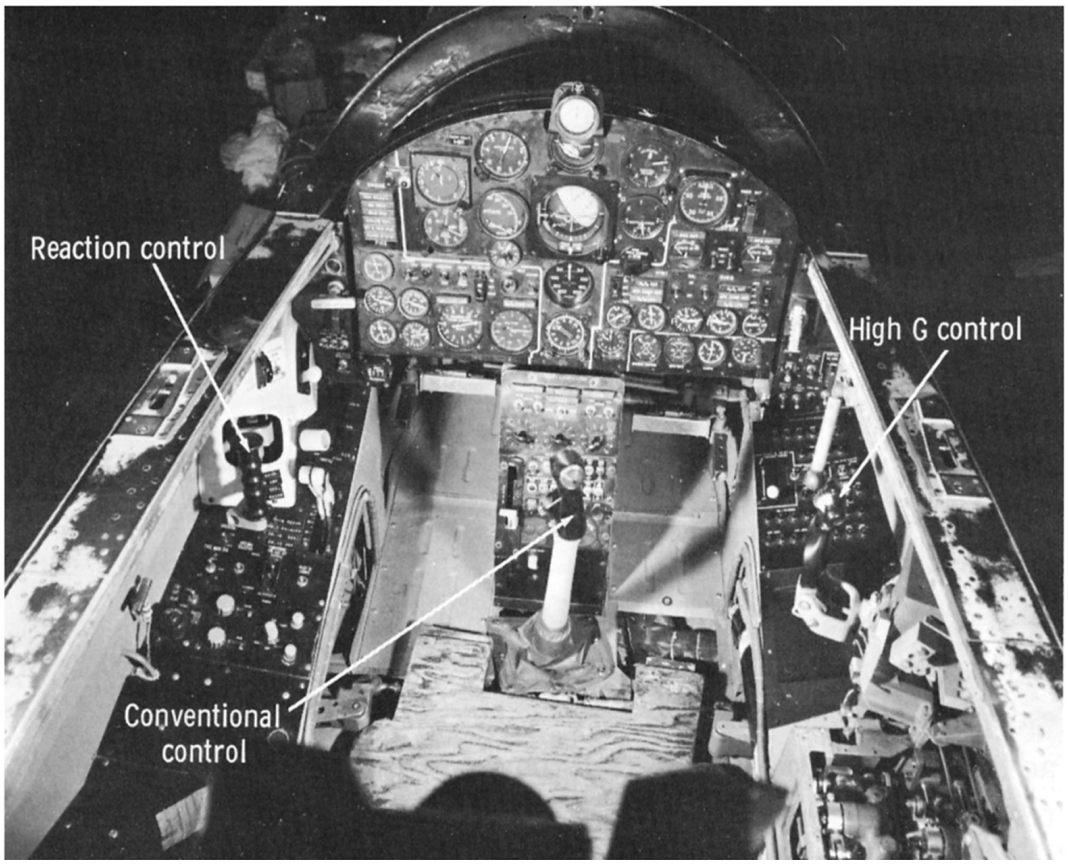

The X-15's cockpit is quite like a jet fighter's, except for its unique arrangement of three control sticks. The one at left governs the jet reaction controls, in space-equivalent flight. The one at right is used in high-G flight and is mechanically linked to the conventional stick at center.

during powered flight and reentry. This is an essential feature, which enables the pilot to maintain precise control for these conditions. The third control stick is located at the pilot's left, and is used to control the X–15 when it is above the atmosphere. This stick actuates reaction jets, which utilize man's oldest harnessed-energy form, steam. The X–15 uses a modern form of superheated steam, from the decomposition of hydrogen peroxide (H_2O_2). This concept was later adopted for the Mercury-capsule jet controls. The reaction thrust is produced by small rocket motors located in the nose, for pitch and yaw control, and within the wings, for roll control. While such a system was simple in principle, control by means of reaction jets was as novel in 1956, when it was introduced, as orbital rendezvous is today. The transition from aerodynamic control to jet control loomed as the most difficult problem for this vast, unexplored flight regime.

There were many other new and peculiar conditions for the pilots to face. Altogether, they would be tackling the most demanding task ever encountered in piloted aircraft. Some of the control-system and physical characteristics were tailored to their capabilities to attain the desired airplane-pilot combination. While the pilot is an integral part of the concept, with maximum provision made for his safety, he needs to be able to escape from unforeseen hazardous conditions. The difficulty, in the case of the X–15, was that to create a system that would protect the pilot during escape anywhere within the flight corridor or above it would require a development program nearly as large as that of the airplane. lt would also require a prohibitive increase in airplane weight. The result was that an over-all escape capability was not provided. The airplane itself was regarded as the best protective device for the pilot at high speeds. At low speeds, he could use an ejection seat similar to that used in most military aircraft.

But "low speed" for the X–15 is 2000 mph, and to provide for escape over this much of the corridor required a state-of-the-art advance in escape systems. Extensive wind-tunnel and rocket-sled esting was necessary to achieve an aerodynamically stable ejection seat. Another major effort was required to provide protection for the pilot against windblast during ejection. Finally, the desired escape capability was provided by a combination of pressure suit and ejection seat.

Major Advance in Powerplant Needed

Aircraft speeds couldn't be pushed far up the flight corridor without major advances in powerplants. And the farther up the corridor one goes, the tougher the going gets. There's enough power in one engine of the trusty old DC–3 to pull a planeload of passengers along at 100 mph, but it isn't enough even to pump the propellants to the X–15 rocket engine. Although by 1955 the United States had eight years' experience with aircraft rocket engines, one of 50 000-pounds thrust was a big advance over any used for that purpose before. Missiles had provided the only previous experience with large rocket engines. And the X–15 couldn't become a one-shot operation. Its engine would have to be an aircraft engine, capable of variable thrust over at least 50 percent of the thrust range and having other normal cockpit control features, such as restarting. A major problem was the threat of a launch-pad disaster with such a large rocket engine and the enormous amount of fuel carried aboard the X–15. This potential danger had to be minimized not only to insure the safety of the X–15's pilot but that of the pilot and crew of the B–52 that would launch it. Thus, safety of operation became an overriding consideration for the X–15 engine.

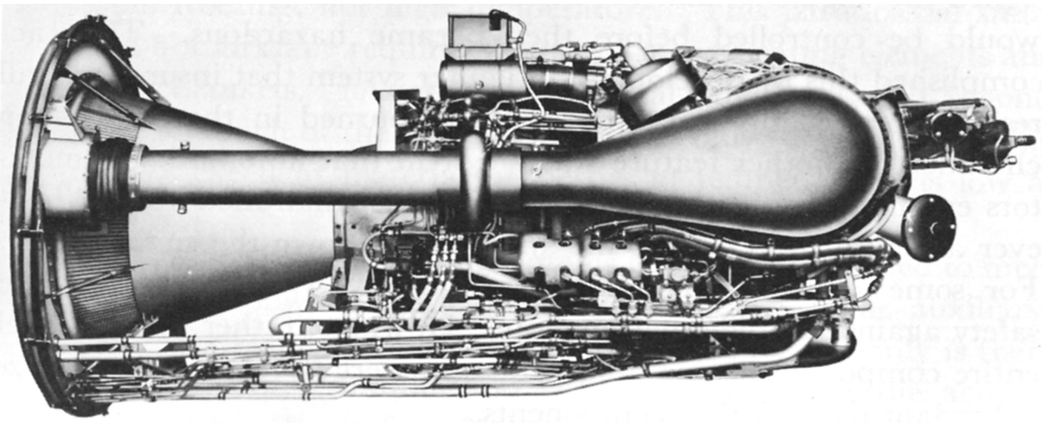

A closeup of the X–15's remarkable XLR–99 rocket engine. Its 57 000-lb. maximum thrust is equivalent at burnout to 600 000 hp. The engine can be throttled from 40-percent to 100-percent thrust. Its propellants flow at the rate of 13 000 lb. per minute at maximum thrust, exhausting the entire 18 000-1b. fuel supply in 85 seconds. The engine's nozzle diameter is 39.3 in.; its over-all length, 82 in.; its weight, 1025 lb.

The problem was two-fold. The huge amount of fuel that was pumped through the engine meant that in the event of engine malfunction, a lot of unburned fuel could accumulate in a fraction of a second. At the same time, combustion difficulties were inherent in an engine in which burning takes place by mixing two liquids together, rather than a liquid and a gas, as in a jet engine or automobile engine. While initially it appeared that a missile engine could be adapted for the X–15, it soon became evident that none would meet the stringent safety requirements.

Subsequently, Reaction Motors, Inc. (now the Reaction Motors Division of the Thiokol Chemical Corp.), was selected to develop what became the XLR–99 rocket engine. lt was clear that this firm was undertaking the development of more than just a suitable engine composed of thrust chamber, pumps, and controls. The technical requirements contained a new specification that "any single malfunction in either engine or propulsion system should not create a condition which would be hazardous to the pilot."

Reaction Motors was well prepared for this task. lt had built many rocket engines for the X–1 and D–558–II research airplanes, and in some 384 flights it had never had a disastrous engine failure. As a result of this background, its engineers adopted a rigorous design philosophy that left its mark on every detail part in the propulsion system. While endeavoring to prevent malfunctions, they designed the engine so that the conditions following any malfunctions would be controlled before they became hazardous. They accomplished this by developing an igniter system that insures that all residual propellants are vaporized and burned in the combustion chamber. Another feature was a system that automatically monitors engine operation and senses component malfunctions. Whenever a malfunction occurs, the system shuts down the engine safely. For some controls, component redundancy was used to provide safety against a single malfunction. However, rather than parallel entire components, some unique designs were developed that utilize redundant paths within components.

The added complexities needed to achieve safe operation of the X–15 engine make it appear to be a "plumber's nightmare" when compared to other rocket engines of its era. And normally the penalty for complexity is reduced reliability in operation. But inflight reliability has been 96 percent—a remarkable figure com-

pared to that of missile engines of similar design. lt is obvious that safety of operation was not gained at the sacrifice of over-all reliability.

The engine burns a mixture of anhydrous ammonia (NH_3) and liquefied oxygen (LO_2). These propellants pose a few handling problems, because of the corrosive properties of ammonia and the low temperatures of liquid oxygen, which boils at –297° F. Since the propellant tanks are an integral part of the airplane structure, temperature extremes between structure close to the lox tank and surrounding structure have exerted a major influence on thermal stresses and structural design. The lox tank has a capacity of 1003 gallons; the ammonia tank, 1445 gallons. This gives a burning time of 85 seconds at full thrust. An important feature of the X–15's lox system is the need for replenishing it after takeoff, because of the large amount lost through boil-off during the climb to launch altitude aboard the B–52. This topping-off takes place continuously, under control of a B–52 crewman, from tanks within the B–52, which have a capacity 1½ times that of the X–15's.

The X–15 also carries, besides engine propellants, vast quantities of hydrogen peroxide (H_2O_2), liquefied nitrogen (–310° F), gaseous nitrogen, and gaseous helium (–240° F), used to operate various subsystems. With such large amounts of super-cold liquids flowing within the airplane, its internal components need protection from freezing, not high temperature. This paradoxical situation in a hot airplane requires the use of many heating elements and insulation blankets. (Another paradoxical situation is that Inconel X, of which much of the plane is made, not only resists high heating but retains excellent material properties at temperatures as low as –300° F.)

Many unique systems and subsystems had to be developed to meet a host of new power requirements and functions. The auxiliary-power requirements, in particular, were severe, for not only is there large demand for hydraulic and electrical power but the aerodynamic controls will not function without hydraulic power. Therefore, dualization is used in critical components, from fuel tanks to hydraulic actuators. The hydraulic pump and electrical generator are driven by a 50 000-rpm, high-temperature steam turbine, which operates on hydrogen peroxide. The hydrogen-peroxide tanks also supply the reaction-jet control system.

A second major subsystem is the air-conditioning unit, which protects the pilot and instrumentation from the effects of heating and also cools the auxiliary-power system. It operates from liquid nitrogen, and, in addition to cooling, pressurizes the cockpit, instrument compartment, pilot's suit, hydraulic reservoir, and canopy seal.

One of the most complex and vital subsystems is the payload, the research-instrument system. It was, of course, of utmost importance to bring back a record of the temperatures and the aerodynamic forces in this new environment, and the response of the structure to them. This required installing thermocouples and probes and tubing within the structure, as well as inserting them into the layer of airflow around it. That necessitated cutting holes in the wings and along the fuselage in locations that plagued the structural engineers, and the installation had to be done while the airplane was being built. By the time this work was completed, some 1400 pounds had been added to the airplane's weight. The research-instrument system was perhaps the only one in which such a large weight would be accepted, though reluctantly.

Throughout the design and construction, one goal for the X–15 was to make it as simple as possible, to use conventional design techniques, and to use proven components wherever possible. Even a cursory glance shows, however, that there is little conventional about the X–15 or its systems. The many new concepts were the products of necessity rather than desire. Newly conceived components together with new materials and new processes have made even simple systems become complex development projects. As a result, a rigorous product-improvement-and-development program is still underway five years after the first flight. Thus, from a 1956 aerodynamic design, a 1957 structural design, 1958 fabrication techniques, and a 1959–64 development-test program, the X–15 has evolved into an airplane in which updating and systems research have been important factors.

The prime objective of the X–15 program has remained flight research, however. By the time of the first flight, much had already been learned about hypersonic flow by focusing the talents of many men on X–15 problems. Many of the worries over flight above the atmosphere had been dispelled. Yet hypersonic, exo-atmospheric, and reentry-flight research was still a vague and obscure world. Were the problems imagined or real? And what of those problems

that man cannot foresee? The X–15 team was sure of only one thing. The problems would come to light through probing the flight corridor, until all the interactions among aerodynamics, structure, stability, systems, and pilot control had been forced into view, and the adequacy or inadequacy of man's knowledge and capability revealed.

CHAPTER 4

Flight Research

THE HEART of an exploratory research program is planning. For the X–15, it is nearly endless, and in a constant state of flux. This work started with a feasibility study, which revealed that major changes in flight-operations procedures from those of previous research airplanes would be required. This grew into a program of ever-increasing detail and variety to explore the many facets of flight within the corridor as well as in the space-equivalent and reentry regions.

With a performance capability of Mach 6 and 250 000 feet, the X–15 had outgrown the type of operation that had suited the X–1 and X–2. The expanded requirements were evident in the B–52 launch airplane, pilot training, emergency-rescue facilities, emergency-landing facilities, and in a facility to coordinate and control each flight, as well as a radar and communications network. All these had to be developed and integrated into an over-all plan that would provide maximum support for the pilot on each flight. Little wonder, therefore, that preparations for flight operations started almost as early as the design studies began, in 1956. Work was underway at various facilities of NACA, the Air Force, and North American Aviation. Most of it was being done by the two groups that would carry forward the flight-research program: the NACA High Speed Flight Station and the Air Force Flight Test Center, both at Edwards Air Force Base, California. These two organizations had worked together in a spirit of cooperation and friendly competition since the X–1 and D–558–I research programs of 1947. They were experienced in the peculiarities of rocket-airplane operations and the techniques for exploring new aerodynamic conditions in flight. To them, the X–15 was more than just the newest of the X-series of research airplanes. The advanced nature of the program, airplane, systems, and region of exploration would

require a supporting organization as large as the combined staff needed for all previous rocket airplanes.

North American Aviation played a major role, of course, during the initial phases of the flight program. Its demonstration and de-bugging of the new airframe and systems comprised, in many respects, the most arduous and frustrating period of flight operations. The first year, in particular, was full of technical problems and heartbreak. One airplane split open on landing. Later, its hydrogen-peroxide tank exploded, and its engine compartment was gutted by fire on the ground. Another X–15 blew apart on the rocket test stand. Flight research has never been painless, however, and these setbacks were soon followed by success. Inevitably, the NAA flights and the research program overlapped, since not only were two of the three airplanes in operation but an interim rocket engine was in use for the early flights. (The XLR–99 engine was delayed, and two RMI XLR–11 rocket engines, having a total thrust of 16 000 pounds, were installed and flown for 30 flights of the X–15.) In addition, exploratory research flights to determine practical operating limits merged with many of the detailed research flights, and even with some flights carrying scientific experiments. Such flexibility is normal, however, since flight research does not consist of driving rigidly toward fixed goals.

The X–15 program progressed from flight to flight on foundations laid upon freshly discovered aerodynamic and operational characteristics. This research approach requires preflight analysis of all constraints on aerodynamic and stability-and-control characteristics, on structural loads, and on aerodynamic-heating effects to determine the boundary within which the flight can be made with confidence. The constraints are regarded as critical limits, and the delicate balance between adequacy and inadequacy can most easily be found by approaching a limit yet never exceeding it.

Operational considerations require an answer to every question of “What if this malfunctions?” before a pilot is faced with it, perhaps critically, in flight. Often the success of a mission depends upon the pilot’s ability to switch to alternate plans or alternate modes of operation when a system or component fails. And flight research requires a certain wariness for unanticipated problems and the inevitable fact that they become obvious only when a system or component is exposed to them at a critical time. Yet some risk must be taken,

for a too-conservative approach makes it almost impossible to attain major goals in a practical length of time.

These factors have always been important to flight research, but they were severely compounded in the case of the X–15. In investigating the reentry maneuver and conditions of high aerodynamic heating, the airplane is irrevocably committed to flight in regions from which the pilot cannot back off in case he encounters an unforeseen hazard. The complicating factor is that the load-carrying ability of the heat-sink structure is not so closely associated with specific speed-altitude-load conditions as it is in most other airplanes. Instead, it depends largely upon the history of each flight up to the time it encounters the particular condition. Therefore, it wasn't at all easy to predict margins of safety for the X–15's structural temperatures in its initial high-heating flights. Moreover, since both airframe and systems were being continuously modified and updated as a result of flight experience, many limiting conditions changed during the program.

Thus, while an operational margin of safety has always governed the program, rather diverse criteria have had to be used to define that margin. Generally, each flight is a reasonable extrapolation of previous experience to higher speed, altitude, temperature, angle-of-attack, and acceleration, or to a lower level of stability. The magnitude of the extrapolation depends on a comparison of flight results, on wind-tunnel and theoretical analysis, on pilot comments, and on other pertinent factors. The accuracy of aerodynamic data determined in flight naturally has a bearing on flight planning. So data-reduction and analysis are as important considerations as operational and piloting factors.

Through an intensive program of 26 flights in the 1960–62 period (in addition to flights required for pilot-training or systems-check), the X–15 probed flight to its design goals of Mach 6, 250 000-feet altitude, and 1200° F structural temperatures. This was very close to the number of flights originally planned to reach those goals, but the types of flight differed considerably from those of the initial plan. Some deviations were made to explore a serious stability-and-control problem found at high angle of attack. Another was made to explore high-heating conditions after thermal gradients greater than expected had deformed the structure to a minor but potentially dangerous extent.

The pace to push past the design goals was slower. Another year and a half passed before the present maximum altitude of 354 200 feet was attained. Maximum temperature was raised to 1325° F in a flight to high-heating conditions at Mach 5 and low altittude.

A large measure of the success of the program has been due to a research tool—the X–15 flight simulator—that was not available when planning started, ten years ago. The flight simulator consists of an extensive array of analog-computing equipment that simulates the X–15 aerodynamic characteristics and computes aircraft motions. Linked to the computer are exact duplicates of the X–15 cockpit, instruments, and control system, including hydraulics and dummy control surfaces.

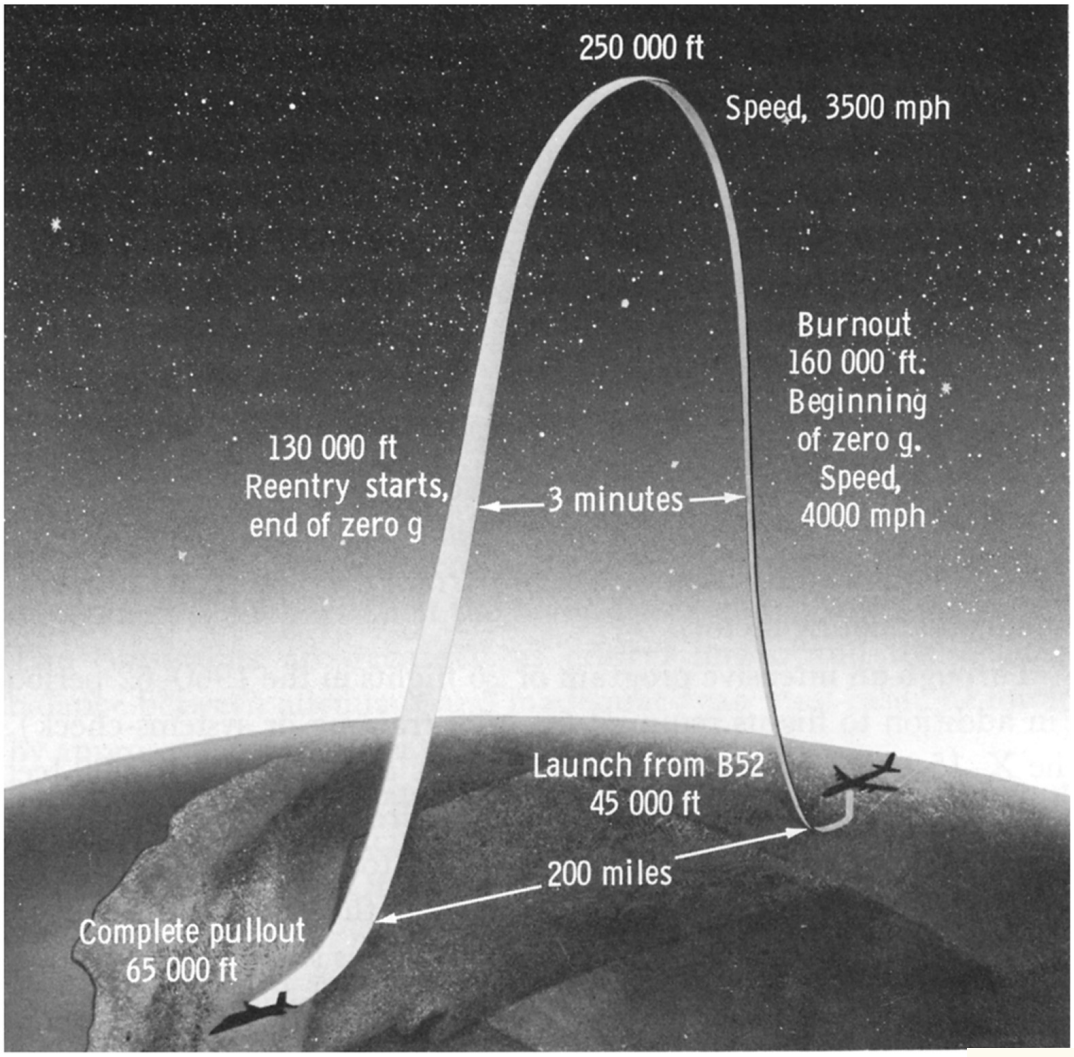

Profile and pertinent details of a flight in which the X–15 achieved its design goals in speed and altitude and came very close to that point in structural temperature.

The X–15 flight simulator is somewhat like a Link trainer. But its technology and complexity are as far advanced beyond those of the Link trainer as the complexity of a modern high-speed digital computer exceeds that of a desk-top adding machine. With the simulator, both pilots and engineers can study flight conditions from launch to the start of the landing maneuver. A flight is "flown" from a cockpit that is exactly like that of the airplane. Only the actual motions of pilot and airplane are missing.

Long before the first flight, X–15 pilots had become familiar with the demands for precise control, especially during the first 85 seconds—the powered phase, which establishes conditions for the entire flight. They had trained for the peculiarities of control above the atmosphere with the jet reaction rockets. They had simulated reentries at high angle of attack over and over again. The simulator also gave them practice in the research maneuvers and timing necessary to provide maximum data points for each costly flight. They had practiced the many flight-plan variations that might be demanded by malfunctions of rocket engine, subsystems, or pilot display. They thus had developed alternate methods for completing each mission, and had also developed alternate missions. Sometimes the flight simulator proved its worth not so much by indicating exact procedures as by giving the pilot a very clear appreciation of incorrect procedures.

Without this remarkable aid, the research program probably would have progressed at a snail's pace. Yet the flight simulator was not ready-made at the start of the program. In fact, the complete story of its technology is in large measure the story of how it grew with the X–15 program. The potential of flight simulators for aircraft development was just beginning to be appreciated at the time of the X–15 design. Thus there was interest at the start in using one to study X–15 piloting problems and control-system characteristics. Early simulators were limited in scope, though, and concentrated upon control areas about which the least was known: the exit condition, out-of-atmosphere flight, and reentry. Noteworthy was the fact that angle of attack and sideslip were found to be primary flight-control parameters, and hence would have to be included in the pilot's display. One of the chief early uses of the simulator was to evaluate the final control-system hardware and to analyze effects of component failures.

The initial simulations were expanded, and it soon was apparent that the simulator had a new role, far more significant than at first realized. This was in the area of flight support; namely pilot training (as already described), flight planning, and flight analysis. The two last matters are closely interlocked, which insured that each step in the program would be reasonable and practical. Pilot training was also closely integrated, since often the margin of safety was influenced by a pilot's confidence in the results from the flight simulator. During the exploratory program, the capability of the simulator to duplicate controllability at hypersonic speeds and high angle of attack was an important factor in determining the magnitude of each subsequent step up the flight corridor.

Even after 120 flights, pilots spend 8 to 10 hours in the simulator before each 10–12-minute research flight.

The importance of the flight simulator today reflects the confidence that pilots and research engineers have gained in simulation tech-

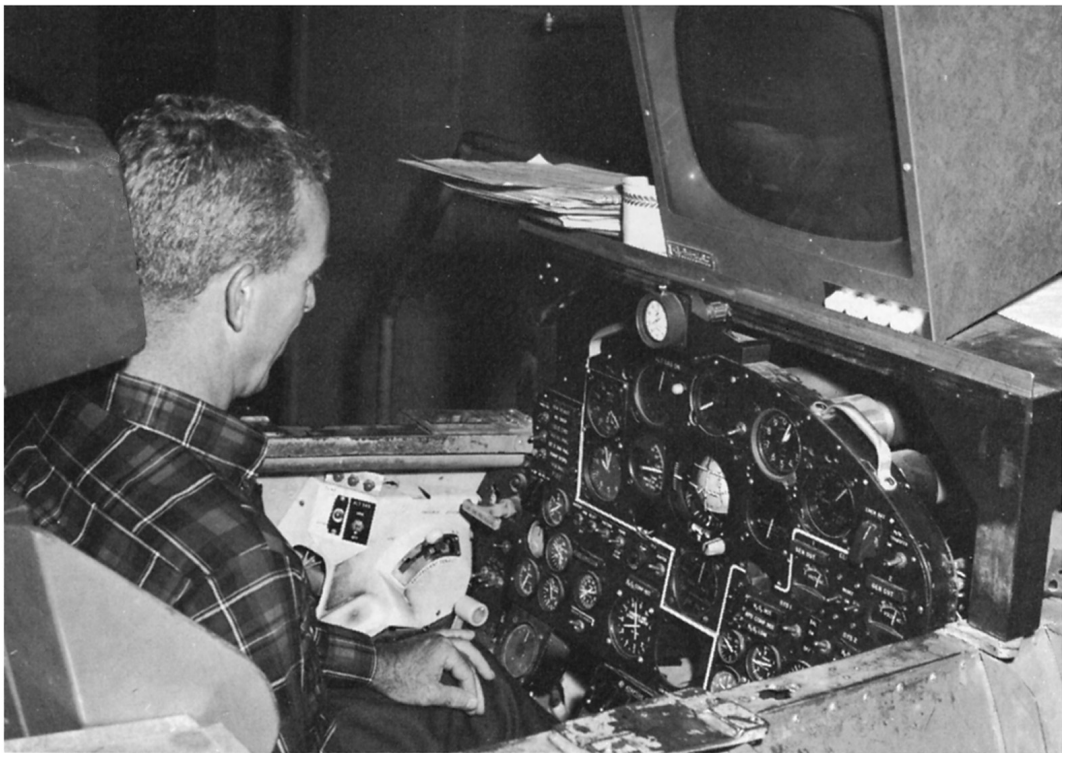

Before each 10–12-minute research mission, X–15 pilots train as long as 10 hours in the electronic simulator at Edwards AF Base. Chief Research Pilot Walker is sitting in its cockpit here. The simulator duplicates the X–15's cockpit, instruments, and control system, including hydraulics and dummy control surfaces, and is nearly as long as the aircraft itself.

niques. This confidence was lacking at the start of the program, since the simulator basically provides instrument flight without motion cues, conditions not always amenable to extrapolation to flight. However, much has been learned about what can and cannot be established on a flight simulator, so that even critical control regions are now approached in flight with much confidence.

The application of the X–15 simulation techniques to other programs has accelerated flight-simulation studies throughout the aerospace industry. Interestingly, this is one of the research results not foreseen.

Navy's Centrifuge Valuable Aid

A notable contribution to flight simulation was also made by the Navy, theretofore a rather silent partner in the X–15 program. The Aviation Medical Acceleration Laboratory at the Naval Air Development Center, Johnsville, Pa., has a huge centrifuge, capable of carrying a pilot in a simulated cockpit. The cockpit is contained in a gondola, which can be rotated in two axes. It is mounted at the end of a 50-foot arm. By proper and continuous control of the two axes in combination with rotation of the arm, the forces from high-G flight can be imposed on the pilot. This centrifuge was an ideal tool with which to explore the powered and reentry phases of X–15 flights.

Another significant aspect of the NADC centrifuge soon became apparent. Previously, the gondola had been driven along a programed G pattern, not influenced by the pilot; he was, in effect, a passenger. But in flight an X–15 pilot not only would have to withstand high G forces but maintain precise control while being squashed down in his seat or forced backward or forward. lt was important to find out how well he could maintain control, especially during marginal conditions, such as a stability-augmentation failure during reentry. The latter would superimpose dynamic acceleration forces from aircraft oscillations on already severe pullout G's. There were no guidelines for defining the degree of control to be expected from a pilot undergoing such jostling.

To study this phase, the NADC centrifuge was linked to an electronic computer, similar to the one used with the X–15 flight simulator, and the pilot's controls. The computer output drives the centrifuge in such a manner that the pilot experiences a convincing

approximation of the linear acceleration he would feel while flying the X–15 if he made the same control motions. (The angular accelerations may be unlike those of flight, but normally they are of secondary importance.) This type of closed-loop hookup (pilot control to computer to centrifuge) had never been attempted before. It was a far more complex problem than developing the electronics for the immobile flight simulator.

With this centrifuge technique, pilots "flew" about 400 reentries before the first X–15 flight. The G conditions on most of these simulated reentries were more severe than those experienced later in actual flights. The simulation contributed materially to the development and verification of the pilot's restraint-support system, instrument display, and side-located controller. The X–15 work proved that, with proper provision, a pilot could control to high acceleration levels.

Aside from its benefit to the X–15 program, the new centrifuge technique led to fresh research into pilot control of aircraft-spacecraft. The Aviation Medical Acceleration Laboratory was soon deluged with requests to make closed-loop dynamic flight simulations, particularly for proposed space vehicles. Many of these studies have now been completed. They have shown that pilot-astronaut control is possible to 12–15 G's. This research will pay off in the next generation of manned space vehicles. The X–15 closed-loop program was also the forerunner of centrifuges that NASA has built for its Ames Research Center and Manned Spacecraft Center.

In addition to hundreds of hours of training with the flight simulator and the NADC centrifuge, the X–15 pilots have also trained in special jet aircraft. These aircraft were used for limited explorations of some of the new flight conditions. For example, an exploratory evaluation of the side controller was made as early as 1956 in a T–33 trainer, and later in an F–107 experimental aircraft. Other tests were made of reaction jet controls, and the reentry maneuver was explored with two special test aircraft that were in effect airborne flight simulators. One of the earliest programs, still in use, is X–15 approach-and-landing training in an F–104 fighter. This practice, which involves deliberately inducing as much drag as possible, has been especially important in maintaining pilot proficiency in landing, since for any single pilot there are often long intervals between X–15 flights.

Many flight tests were made to integrate the X–15 with the B–52 launch-airplane operation. The air-launch technique had been proven, of course, with previous rocket airplanes. The concept has grown, however, from a simple method for carrying the research aircraft to high initial altitude, to an integral part of the research-aircraft operation. For the X–15, the air-launch operation has become in effect the launching of a two-stage aerospace vehicle, utilizing a recoverable first-stage booster capable of launching the second stage at an altitude of 45 000 feet and a speed of 550 mph. As with any two-stage vehicle, there are mutual interferences. They have required, among other things, stiffening of the X–15 tail structure to withstand pressure fluctuations from the airflow around the B–52 and from the jet-engine noise.

Several of the X–15 systems operate from power and supply sources within the B–52 until shortly before launch; namely, breathing oxygen, electrical power, nitrogen gas, and liquid oxygen. These supplies are controlled by a launch crewman in the B–52, who also monitors and aligns pertinent X–15 instrumentation and electrical equipment. In coordination with the X–15 pilot, he helps make a complete pre-launch check of the latter aircraft's systems. Since this is made in a true flight environment, the procedure has helped importantly to assure satisfactory flight operations. The mission can be recalled if a malfunction or irregularity occurs prior to second-stage launch. These check-out procedures are also important to B–52 crew safety, since the explosive potential of the volatile propellants aboard the X–15 is such that the B–52 crew has little protection in its .040-inch-thick aluminum "blockhouse."

The launch is a relatively straightforward free-fall maneuver, but it was the subject of early study and concern. Extensive wind-tunnel tests were made to examine X–15 launch motions and develop techniques to insure clean separation from the B–52.

The X–15 required a major change in flight operations from those of previous rocket airplanes, which had operated in the near vicinity of Rogers Dry Lake, at Edwards. With a Mach 6 capability, the X–15 had outgrown a one-base operation, since it may cover a ground track of 300 miles on each flight. The primary landing site is at Edwards, which requires launching at varied distances away from the home base, depending on the specific flight mission and its required range. A complicating factor in flight

operations is that the launch must be made near an emergency landing site, and other emergency landing sites must be within gliding distance as the craft progresses toward home base, for use in the event of engine failure.

Fortunately, the California-Nevada desert region is an ideal location for such requirements, because of many flat, barren land areas, formed by ancient lakes that are now dry and hard-packed. Ten dry lakes, spaced 30 to 50 miles apart, have been designated for X–15 use, five as emergency landing sites near launch location, five as emergency landing sites down-range. The X–15 pilots are thoroughly familiar with the approach procedures for all emergency landing sites.

Because of wide variations in the research maneuvers, successive flights may be made along widely separated ground tracks. The track will normally pass within range of two or three emergency sites. The desired research maneuvers often must be altered to make sure that the flight path passes near emergency landing sites. These

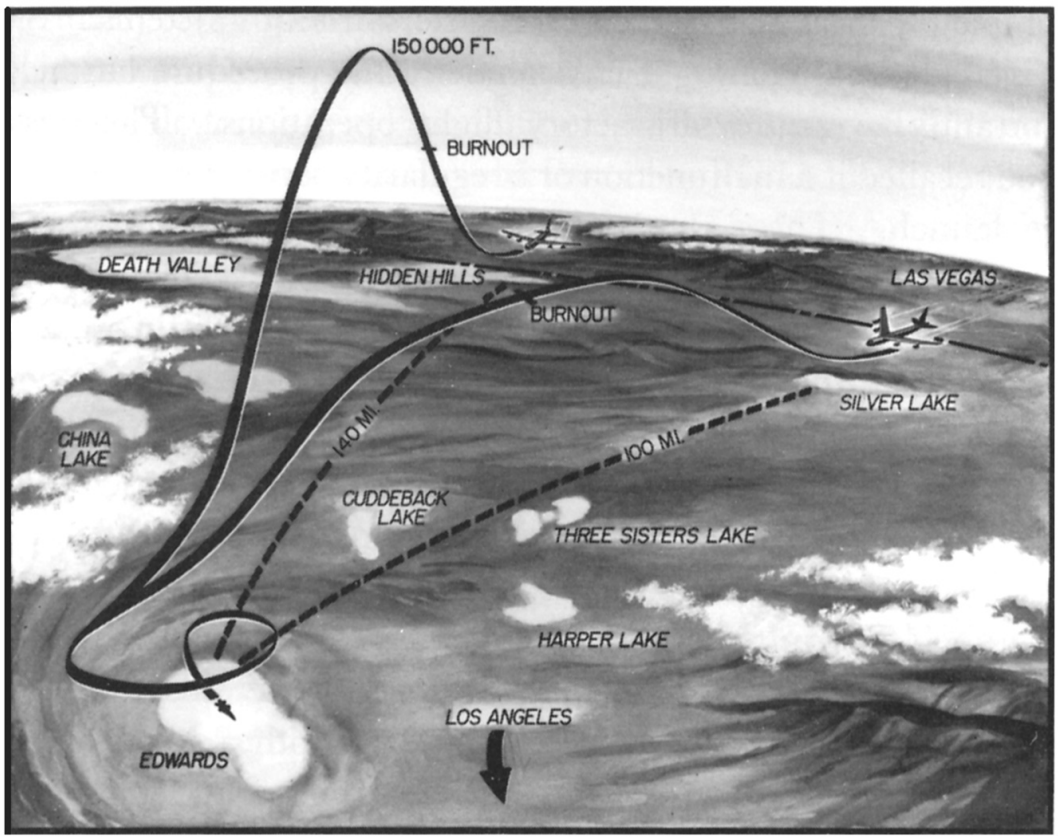

This drawing shows the flight paths of two typical research missions of the X–15. Radar stations at Beatty and Ely, Nev., and at home base track each flight from takeoff, attached to a B–52 drop plane, to landing. Launch always occurs near one of the many dry lakes in the region, some of which are indicated here.

procedures are studied on the flight simulator, and pilots predetermine alternate sites and the techniques to reach them for each flight. On four occasions, rocket-engine malfunctions have necessitated landing at an emergency site.

Emergency ground-support teams, fire trucks, and rescue equipment are available at all sites. Airborne emergency teams, consisting of helicopters with a rescue team and a C–130 cargo airplane with a pararescue team, are also positioned along the track.

An important adjunct to mission success has been the extensive support the X–15 pilot receives during a flight from the many people "looking over his shoulder," both in the air and on the ground. On hand during a flight are chase aircraft, which accompany the B–52 to the launch point. Although these are soon left far behind after X–15 launch, other chase planes are located along the intended track to pick up the X–15 as it nears the primary or alternate emergency landing sites.

Coordination and control of the farflung operation are carried out from a command post at the NASA Flight Research Center. Into it comes information pertinent to the X–15's geographic location, performance, and systems status, and the status of the B–52, chase planes, and ground-support teams. Responsibility for the coordination of this information, as well as for the complete mission, rests with a flight controller. This function is carried out either by one of the X–15 pilots or by some other experienced research pilot. The flight controller is in communication with the X–15 pilot at all times, to provide aid, since he has far more information available to him than the pilot has. This information is provided by a team of specialists who monitor telemetry signals from the airplane. One of the primary functions of the flight controller is to monitor the X–15's geographic position in relation to the amount of energy it will need to reach an intended landing site. The flight controller also provides navigation information to help the X–15 pilot reach any desired site.

The flight controller's capability to monitor the complete operation is provided by a radar-telemetry-communications network that extends 400 miles, from Edwards to Wendover, Utah. Ground stations are located at Edwards; Beatty, Nevada; and Ely, Nevada. Each station is an independent unit, though all stations are interconnected by telephone lines or microwave-relay stations. This network is another joint USAF–NASA facility. Like most other features of

the program, the range has been updated to provide additional flexibility, accuracy, and/or reliability.

Another integral part of a flight-research program is extensive and detailed measurements of aircraft behavior. These measurements enable X–15 pilots to approach critical conditions with confidence, and also provide data to uncover unforeseen problems. However, determining suitable instrumentation is not an exact science. In many cases, although the airplane seemed to be overinstrumented during design, it was found to be underinstrumented in specific areas during the flight program. In addition, many compromises had to be made between the amount of instrumentation for research measurements and that for systems monitoring. Other compromises were necessary for measuring and recording techniques. A vast array of gauges, transducers, thermocouples, potentiometers, and gyros is required to measure the response of the X–15 to its environment.

Because of the difficulty of measuring pressures accurately in the near-vacuum conditions of high-altitude flight, an alternate method for measuring velocity and altitude had to be developed. The system uses a missile-type inertial-reference system, with integrating accelerometers to determine speed, altitude, and vertical velocity. The system also measures airplane roll, pitch, and yaw angle relative to the Earth, to indicate aircraft attitude to the pilot. Alignment and stabilization are accomplished during the climb to launch altitude by means of equipment within the B–52.

Another system development was required for measuring angles of attack and yaw. Although flight measurements of these quantities had always been important for analysis of aerodynamic data, they took on added significance for the X–15 when early simulator studies showed that they would be required as primary pilot-control parameters during much of a flight. Rather severe requirements were placed on the system, since it would have to measure airflow angles at air temperatures to 2500° F and have satisfactory response for very low as well as high air pressures. The system consists of a sphere, 6½ inches in diameter, mounted at the apex of the airplane nose. This sensor is rotated by a servo system to align pressure orifices on the sphere with the airflow. The system has been highly successful for the precise control that the X–15 requires.

A most important contribution to mission success is the “blood, sweat, and tears” of the men who work to get the X–15 off the

ground. An unsung effort, averaging 30 days in duration, is required to prepare and check-out the airplane and systems for every flight. Many of the systems and subsystems were taking a larger than normal step into unknown areas. Inevitable compromises during design and construction resulted in an extensive development effort for many components and subsystems, as part of the flight-research program. A rigorous program of product improvement and updating of systems has continued throughout flight operations. While this work ultimately forced a somewhat slower pace upon the program, its results are found in the remarkably successful record of safe flight operations and in-flight reliability.

The flight achievements, of course, are the payoff for the meticulous preparations that have gone on for the past 10 years. Without this vast support, the pilots might have taken too large a step into new flight regimes. While many problems were encountered, they have been surmounted, some as a result of pilot training, others as a result of measurements of the response of the airplane to the new flight environment.

Just as each X–15 flight leaves a few less unknowns for succeeding flights, so will the X–15 program leave a few less unknowns for succeeding airplanes. By exploring the limits of piloted flight within the corridor as well as above it, man has expanded his knowledge in many fields. The real significance of the four miles of data from each flight came from tedious analysis of the response, which provided some insight into basic forces. Sometimes an examination of gross effects sufficed, but more often it required a penetrating look into the very core of aerodynamic flow. From this has come the first detailed picture of airflow around an airplane at hypersonic speeds.

CHAPTER 5

Aerodynamic Characteristics of Supersonic-Hypersonic Flight

OUR DEPTH OF UNDERSTANDING of how we fly has come from study of the mechanics of flight and the theory of airflow. This comprises the science of aerodynamics, which has its roots in the study of fluid mechanics and concerns all the forces acting on an airplane as a result of its motion through the air. When an airplane passes through the atmosphere, the air molecules behave like a fluid, flowing around the wings and fuselage, tending to stick to the surface and be dragged along behind, and, under certain conditions, being compressed. The pressure from this flow exerts the well-known lift and drag forces, and the less familiar stabilizing forces.

Airflow shows an amazing variety of characteristics, which have been the subject of intensive theoretical analysis and study in wind tunnels. At slow speeds, the pressures an airplane generates as it moves through the air are small relative to the ambient atmospheric pressure. The balance between these two pressures establishes the boundaries of the aerodynamic flight corridor. The pressure produced by motion, called dynamic pressure, increases as the square of velocity. At Mach 1.2, the dynamic pressure is equal to the atmospheric pressure; at Mach 6, it is 25 times greater. This increase in dynamic pressure permits sustained flight at high altitude, where the atmospheric pressure is extremely low, provided the speed is high enough.

Pressure forces are also affected by changes in airflow, from its elastic and viscous characteristics as it flows around an aircraft. Drastic changes in flow, as previously noted, are encountered in flight to high speeds. At 4000 mph, the airflow bears little resemblance to that at 400 mph. It will, in fact, have gone through four regions: subsonic, transonic, supersonic, and hypersonic.

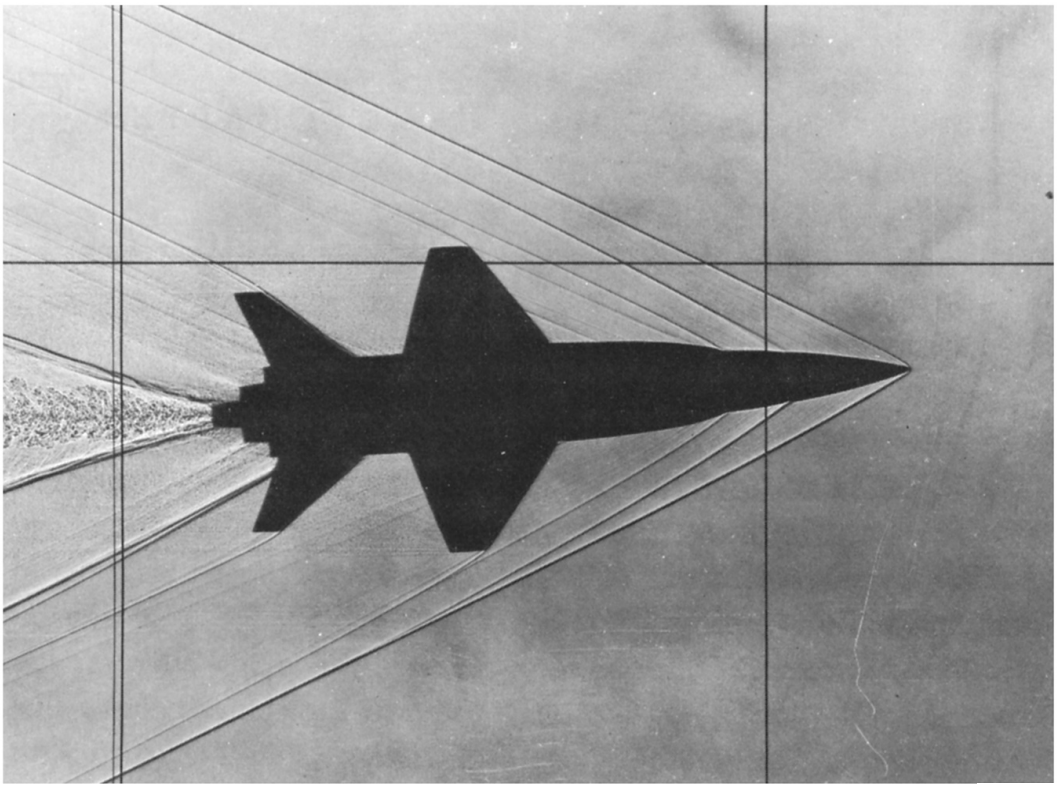

These dramatic photographs of free-flight models of the X–15 being fired into a wind tunnel vividly detail the shock-wave patterns for airflow at Mach 3.5 (above) and at Mach 6.

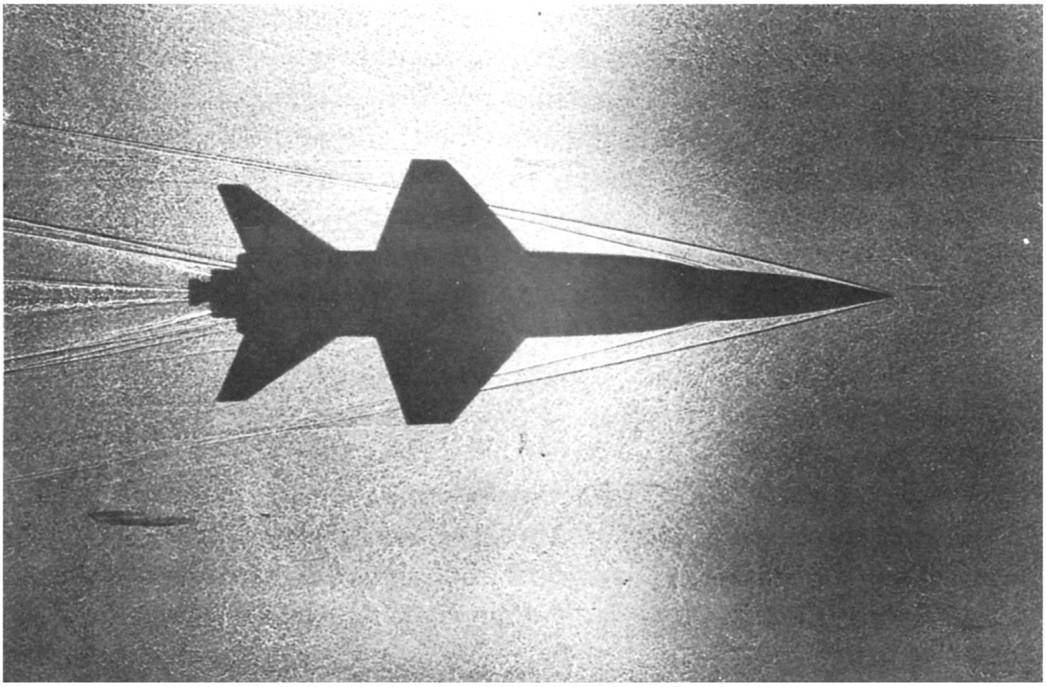

The major consequence of flight to high speed is the effect on airflow, because of the elasticity (compression and expansion) of air. At the slowest speeds, subsonic, the effects are not pronounced. As airflow velocities increase, the air becomes compressed, and pressure begins to pile up ahead of each part of the aircraft, until finally distinct pressure waves, or shock waves, form. The transonic airflow region is where shock waves first appear on an aircraft, though these shocks may be only local in nature. It is a region of mixed and erratic flow between subsonic and supersonic flow, which causes abrupt changes in lift and drag forces and airplane stability. As speed is further increased, local regions of subsonic flow disappear, and the flow is everywhere supersonic. The air has become further compressed. The shock waves are now distinct and trail aft in the form of a wedge, or cone, behind any object that interferes with the airstream. While a shock wave is normally less than .001-inch thick, the air undergoes large changes in pressure, density, and temperature across this minute boundary. These effects are far-reaching, even extending to the ground in the form of sonic booms. Aerodynamic theory has been developed that enables the characteristics of these shock waves to be precisely calculated.

At higher supersonic speeds, the shock waves continue to increase in strength, bending back to form an acute angle with the aircraft surfaces. The equations of supersonic flow at this point no longer apply, and many interactions between shock waves and flow field are evidenced. One major effect is a loss of lifting effectiveness of the wings and tail surfaces, because the shock waves attenuate the aerodynamic forces. Of more significance, the friction of the air flowing along any surface raises air temperature to many times that of the surrounding atmosphere. Airflow is now in the hypersonic-flow region, and the science of thermodynamics is added to aerodynamics. Though not exactly defined, it is generally accepted as applying to speeds above about Mach 5. It is an area of multiple shock waves and interference effects. The difficulty for the aerodynamicist arises from trying to understand the effects of flow that is discontinuous at each shock wave. Each new geometric shape calls for reorganization of theory.

By optimizing the shape, size, and relative locations of wing, tail, and fuselage, an airplane is made highly efficient for one flow region. But that particular configuration may have many adverse

interference effects when airflow enters a new flight regime. Many compromises are necessary to achieve one configuration that is satisfactory from subsonic to hypersonic speeds.

Facing Major Gaps in Knowledge

At the time the X-15 was designed, theory and empirical data (much of it from previous research airplanes) provided a good understanding of the mechanics of airflow for speeds to about Mach 3. But there were major gaps in aerodynamic knowledge above this speed. Some of these gaps were bridged by wind-tunnel tests of scale models of the X-15. However, although models of the X-15 were tested in many supersonic and hypersonic wind tunnels, they were of very small scale—1/15 or 1/50—and no verification had been made of the results from small-scale models for flight at hypersonic speeds. Moreover, wind tunnels approximate flow conditions rather than exactly duplicating them. Hence, a valuable part of the X-15 program would be to verify or modify the picture of hypersonic flow derived from these experimental techniques and from theoretical analyses.

Over the years, various analytical techniques have been developed by which basic aerodynamic characteristics can be extracted from flight measurements of airplane response. In general, it was found that these techniques could be extended to the X-15's ranges of speed and angle of attack. However, since most X-15 maneuvers are of a transient nature, the evaluation of dynamic motions was aided considerably by using the flight simulator to "match" the actual flight maneuvers. New techniques were required for the analysis of aerodynamic heating, however. Since the thermocouples provide only a measure of the response of the structure, techniques were developed on a digital computer to determine heat flow from the air into the structure.

Details of Hypersonic Flow Emerge

From these analyses, the details of hypersonic flow began to unfold. The results confirmed many of its nonlinear characteristics. The data also confirmed another peculiar trend of hypersonic flight: the reduced importance of the wings for lift. At Mach 6 and 25° angle of attack, the large fuselage and side fairings on the X-15 contribute

70 percent of the total lift, enough to permit reentry from an altitude of 250 000 feet with fuselage lift alone.

As the shock waves trail aft from the fuselage nose, canopy, side fairings, wing leading edge, and other protuberances, they interfere with the flow and cause further changes in flow angle and pressure forces. The wing and fuselage also induce a swirling motion in the airflow as it sweeps aft. Another significant change in flow occurs whenever the airplane pitches to a different angle of attack, for this alters the position of the shock waves sweeping aft.

The consequences of these interactions become apparent when flow impinges on the tail surfaces, which provide the means of control as well as the major part of the stability. They may have a favorable effect on the balance between stability and control. In the case of pitch control, the X–15 can be maneuvered to higher angle of attack at Mach 6 than at Mach 3.

At high angle of attack, the changes in flow angle influence the forces on the lower vertical tail, which becomes more effective. The upper vertical tail, on the other hand, comes into a region of lower pressure, and loses much of its effectiveness. The lower vertical tail is able to offset this, though, and provides adequate directional stability to the highest angle of attack attainable—a lack of which proved so disastrous to the X–1A and X–2.

In solving the directional-stability problem, a new difficulty manifested itself. The force on the lower vertical tail that stabilizes the airplane also tends to roll the plane whenever the counterbalancing force on the upper vertical tail is lacking. This type of motion has always plagued pilots, and aircraft designers try to obtain a balance between the rolling and yawing motions that the pilot must counteract. On conventional aircraft, which have virtually all the vertical tail above the fuselage, the roll is in a direction that eases the pilot's control problem. In the X–15 configuration, however, yawing produces an adverse rolling moment, which severely complicates the pilot's control task.

This adverse roll was of great concern during reentry flight at high angle of attack, and will be dealt with in more detail in a later section. It is sufficient to point out here that it was a major problem during the flight program. Fortunately, the lower half of the lower vertical tail is jettisoned prior to landing. Thus, a logical first approach to the stability problem was to remove this surface,

thus reducing the magnitude of the adverse moment. This also reduced directional stability to marginal levels at certain other flight conditions, but a positive increment of stability was obtained by the use of the speed brakes. Various combinations of lower vertical tail and speed-brake position have enabled the X–15 to explore a wide range of aerodynamic characteristics; in effect, to simulate several different aircraft configurations.

From this, designers have gained a clearer understanding of the delicate balance between stability and control for reentry at high angle of attack. The X–15 program has provided insight into theoretical methods used to calculate flow conditions and forces for hypersonic flight. Because of the complexities of hypersonic flow, the calculations are normally made for an isolated fuselage, wing, and tail, to which are added the incremental effects of mutual interference from shock waves and flow. Another assumption of the theories is that the airplane is treated as composed of straight surfaces, a cone-cylinder for the fuselage and flat plates for the wings and tail. The theoretical methods also derive from assumptions of flow conditions at low angles of attack. Yet, these methods were successfully used to include the high-angle-of-attack flight of the X–15. In some cases, pressures on the wing and fuselage could be computed from simplified theories that ignore interference effects. But the key to closer agreement between theory and fact was through approximating as many of the interaction effects and nonlinearities as possible. One flaw in the theories was uncovered, however. In the region of the horizontal tail, the flow is too complex for available theories to predict the amount of control for maneuvering to high angles of attack.

The X–15's aerodynamic measurements have verified the aerodynamic results of various wind-tunnel tests. Supersonic and hypersonic tunnels have rather small test sections, some only nine inches in diameter. This requires the use of very small models, a fact that increases uncertainty when the results are extrapolated to a full-scale airplane. However, measurements in six supersonic and hypersonic wind tunnels at NASA's Langley Research Center and Ames Research Center, and at the Massachusetts Institute of Technology and Jet Propulsion Laboratory, have shown remarkable agreement with flight results. Significantly, this was the first correlation with full-scale flight data.

One area of discrepancy was found—in drag measurements. The tunnels provided accurate measurements of all the various components of drag except that produced by the blunt aft end of the airplane. This component was found to be 15 percent higher on the actual airplane—another area for further research.

From this emerging profile of aerodynamic flow has come a clearer understanding of the peculiarities of the forces from subsonic to hypersonic speeds and to 25° angle of attack. In addition, it has helped pin down some flaws in aerodynamic theory and wind-tunnel testing. As valuable as this research has been, it is of a rather complementary nature. But in the field of aerodynamic heating, fundamental contributions to hypersonic aerodynamics have been made.

This is, perhaps, a normal consequence, since it was an area with significant unknowns, not only during the feasibility studies and the design but until recent flights. Whereas consideration of aerodynamic forces was basically an extension of previous experience, aerodynamic heating of an airplane by the airflow was a completely new factor. Not the least of the difficulties has been to develop flight-test procedures and techniques to analyze structural heating from a high-temperature airflow.

One part of the problem that was well understood from the beginning pertained to the heating of air particles as aircraft speeds increased. As the particles are pushed out of the path of the airplane, some are accelerated to the speed of the plane and undergo a huge change in kinetic energy. This energy is imparted to the molecules in the form of heat, which raises the air temperature an amount proportional to the square of the velocity. At Mach 6, this heat energy raises air temperature to 2500° F, although only within a thin layer of air near the leading edges of the aircraft's wing and tail surfaces, cockpit canopy, etc.

The heat flow from the high-temperature air into the external skin of an airplane presents a complex problem, less well understood. Some early theoretical analysis dates from the 1900's, but, paradoxically, scientists at that time were concerned with the transmission of heat energy from the airplane to the atmosphere; they were trying to solve the problem of cooling aircraft engines. But the basic mechanism is identical for the X–15—the transfer of heat energy between a fluid and the surface over which it passes.

When the X–15 entered the picture, in the early 1950's, several

theories of a semi-empirical type had been developed. The methods were based on assumed flow conditions with approximate solutions, and, although showing some agreement, they showed significant differences. Experimental results were meager, and one thorough series of tests, conducted to determine which theory was more accurate, showed trends that contradicted theoretical analysis. The basic problem is insufficient understanding of the flow properties in the layer of air near the skin.

Analysis shows that the heat-energy flow into the skin from high-temperature air increases in approximate ratio to the cube of the velocity. Thus, at Mach 6, the X–15 absorbs eight times more heat than it encounters at Mach 3. (This assumes that loss of heat energy from the aircraft by radiation from the structure back to the atmosphere is small, which is the case for the X–15. At higher structural temperatures, radiation is a predominant feature, which aids in cooling the structure.)

Heat flow is also a function of air pressure, and the regions of highest heating are found on frontal and lower surfaces that encounter the full impact force of airflow. An alleviating effect comes from flights to high-altitude, low-air-density conditions. In this region, even high air temperatures transfer little heat into the structure. Conversely, the highest structural temperatures encountered with the X–15 have been at Mach 5 and relatively low altitude.

Only a small fraction of the total heat energy of the air is conducted into the aircraft structure. The predominant factors are the heat-conduction and -insulation characteristics of the hot boundary layer of air enveloping the aircraft. Where this layer of air flows in even streamlines along a surface, the heat transfer is small and predictable. But here the viscosity of air is the chief difficulty. One of air's most intransigent characteristics is that boundary-layer flow that starts out in smooth streamlines suddenly changes to a turbulent, eddying type of flow. This turbulent flow is not unusual. It is the normal condition of the flow over much of the X–15. But it introduces problems of major proportions. In spite of never-ending efforts to understand the mechanics of it, it remains a largely unpredictable phenomenon, even for subsonic flow.

With the X–15 and succeeding airplanes, boundary-layer flow assumes major significance because of its effect on aerodynamic heating. Turbulent flow breaks up the insulating properties of air-

flow near the surface, and can increase the heat flow by a factor of six over non-turbulent, or laminar, flow. The irregular nature of the flow, moreover, makes calculation of the heat transfer across the boundary layer a highly speculative proposition.

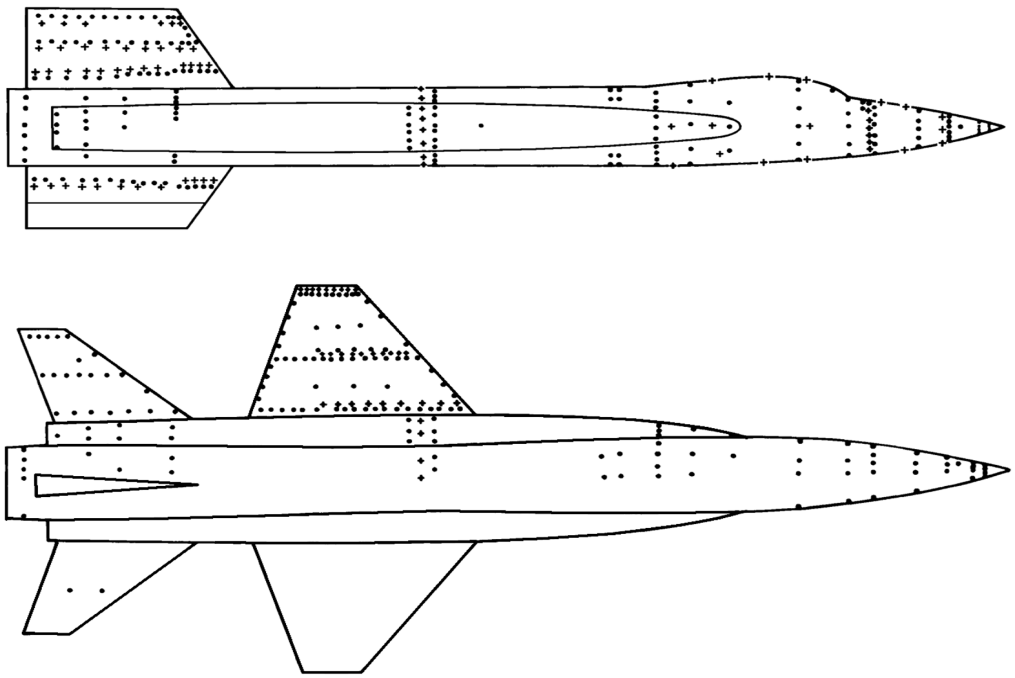

The well-dotted sketches above indicate locations of hundreds of research and systems sensors aboard the X–15. The sensors measure pressures, temperatures, strains, accelerations, velocities, control positions, angles, and physiological data. The outline drawing below shows maximum temperatures that the X–15 has experienced to date, and where they were recorded.

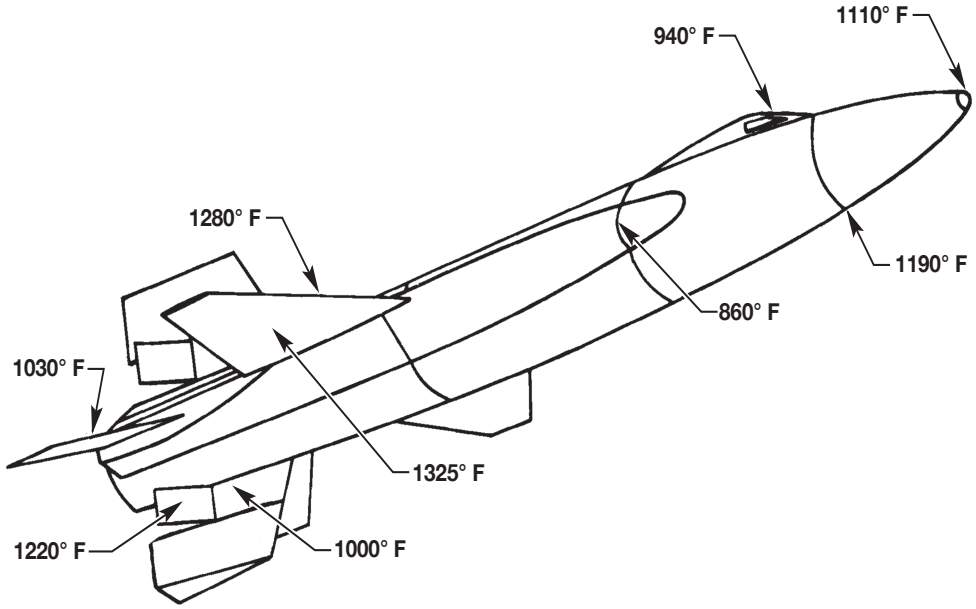

Consequently, the research contribution of the X–15 data to aerodynamic heating has been through clearer understanding of heat transfer and local flow conditions across a turbulent boundary layer. This pioneering work showed initially that heat flow into the X–15 was 30–40 percent lower than predicted by available theories. This large discrepancy, while favorable to keeping structural temperatures low during flight to high speed, stimulated further analysis of the flow conditions.

It appeared at first that the answer might lie in the difference between the type of shock wave assumed for the theories and the kind encountered in flight. Theory was based upon flow around pointed surfaces, with the shock wave attached to the surface and trailing aft in a straight line. In actuality, the blunt leading-edge surfaces of the X–15 produce curved shock waves which remain positioned ahead of the leading points. These differences were disproven as a factor, however, through a series of research flights with a specially fabricated vertical tail with a sharp leading edge, which duplicated the theoretical model. No measurable difference from heat transfer with a blunt leading edge was detected.

An exact understanding of the differences between theory and fact is still to be found. Accurate knowledge of heat flow into the X–15 structure has been obtained, however. From these data, empirical factors have been developed that enable designers to predict structural temperatures for proposed flight trajectories with good accuracy. They are confident that these techniques can be used to predict temperatures to Mach 10 or 12 and smooth the path for future hypersonic aircraft.

The second part of the boundary-layer-flow problem, which concerns the point at which the flow becomes turbulent, remains as obscure as it was in 1954. Boundary-layer flow typically becomes turbulent whenever the viscosity forces binding the streamlines together are overcome by the pressure forces of the airflow along the surface. On the X–15 wing, this normally occurs anywhere from 4 to 12 inches aft of the leading edge. lt has not been possible to correlate the viscosity and pressure forces so as to provide a means for accurately predicting this phenomenon. Lacking this knowledge, designers are forced to make conservative assumptions for the higher heating of turbulent flow, as in the case of the X–15.

Thus, hypersonic flow has yet to reveal all its secrets. Enough is

known, though, to provide a basic understanding of the pressures and heat input along the wing and the fuselage. In localized areas

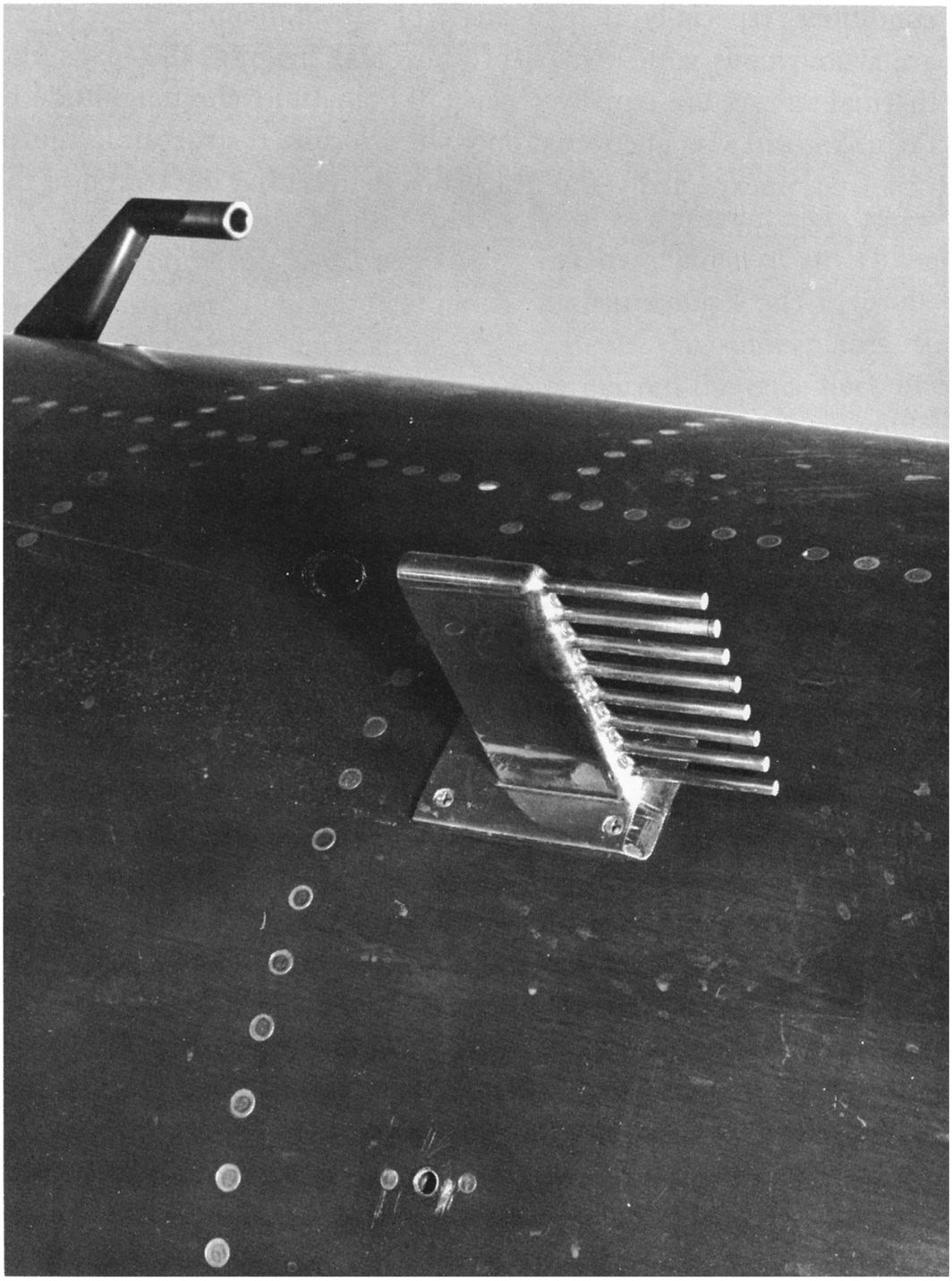

One of the many tools of the X-15's research is this multiple-probe pressure rake, mounted on the forward fuselage to measure boundary-layer airflow at hypersonic speeds. Below the rake is one of the 140 holes cut in the aircraft's skin to measure surface pressures. Above and behind the rake is a pressure probe, used only during landing, for the pilot's airspeed indicator.

with large discontinuities or interference effects, the flow is too complex to yield to a generalized analysis. For example, the wing-fuselage juncture, tail-fuselage juncture, and canopy obstruction create chaotic combinations of multiple shock waves and cross-flow conditions, especially at high angle of attack. Since these effects are synonymous with uneven pressure and heating, the loads and thermal stresses are equally obscure. Sometimes the magnitude of the unknowns was uncovered only when localized structural failures occured, unexpectedly and dramatically upsetting the tempo of the flight program.

CHAPTER 6

A Hypersonic Structure

PERHAPS NOWHERE ELSE are the broad, interdisciplinary facets of hypersonic and reentry flight so apparent as in a close examination of the X–15 structure. The basic effect of any change in airflow, aerodynamic heating, or maneuvering loads is to alter the stresses within each structural element. In some places, the combination of stresses has permanently marred the once-sleek lines of the wings and fuselage. Some scars are penalties for incomplete understanding of the aerodynamic and thermal forces of airflow from subsonic to hypersonic speeds. Others were left by the oscillatory airflow that superimposed dynamic forces on already severe static-load conditions. The deepest scars are found where the interplay among these varied stresses intensified the effects of each. Yet, these scars are superficial, of the engineering-fix type. The basic structure has withstood repeated flights into the high temperatures of hypersonic flight.

Although many details of the stresses within a heat-sink structure were uncovered during the flight program, the major questions had to be answered during design and construction. The problem for the structural engineer would be relatively simple if weight were of little importance. For example, the essential difference between the weight of a diesel train and that of an airplane is that sufficient metal is used in the former to maintain uniformly low stress levels throughout the structure, while an airplane, in order to achieve minimum weight, maintains uniformly high stress levels. For the X–15, it was essential to achieve uniformly high stress levels within each load-carrying element for the many uneven and fluctuating load conditions of flight anywhere within the corridor, and with a reasonable margin of safety.

The compounding factor was the effect of aerodynamic heating. It required a reorientation of the structural designers' thinking, because the many interactions of a hot structure impose further stresses on a pattern already made complex by airloads. The designer

must analyze and sum the individual stresses from static airloads, dynamic airloads, aerodynamic heating, and their interactions. Since the structure responds dynamically as well as statically, a complex chain of reaction and interaction faces the analyst.

Surprisingly, the force from aerodynamic lift that sustains or maneuvers the X–15 is not a major stress problem. The total lift force on the wings of the X–15 during reentry could be carried by the wings of the Spirit of St. Louis, in which Charles Lindbergh crossed the Atlantic. But this statement neglects the distribution of that force, the added stresses from airloads that twist the wing, and the dynamic loads. When these effects are included, the wing of the Spirit of St. Louis would be as incapable of withstanding the total airload during reentry as it would be vulnerable to aerodynamic heating.

The effects from aerodynamic heating are twofold: reduction in the strength of Inconel X as temperature increases, and distortion of the structure from uneven thermal expansion. A new element was also added to structural design, for with the heat-sink concept, the time of exposure became the critical parameter that established the amount of heat flow into the external structure when exposed to a 2500° F airflow. In areas that carry only small aerodynamic loads, Inconel X can withstand considerably more than 1200° F, perhaps 1600° F. The sharp leading edge on the vertical fin has withstood 1500° F, and one non-load-carrying section of the wing skin has successfully endured 1325° F. These temperatures are experienced for only brief periods of time, however. Prolonged exposure would eventually cause these temperatures to be conducted to load-carrying members, and thus impair the structural integrity of the X–15.

The structural design requires a careful balancing between the amount of material required to carry the load and that needed to absorb the heat flow. On a typical flight, the structure near the nose experiences 20 times as much heat input as the aft end. In regions of high heat input—fuselage nose, wing leading edge, tail leading edge—solid bars of Inconel X are required to absorb the heat energy.

A factor important to design balance is that the maximum load and maximum heating temperature do not occur simultaneously. In actual practice, high temperatures have been explored in essen-

tially level flight, with low aerodynamic loads; the high loads of reentry were encountered at relative low temperatures. But whenever Mach numbers greater than 4.5 are achieved, the thermal potential of the airflow can drastically affect the plane's strength. Structural failure could occur at even low load levels during prolonged flights at Mach 5 at low altitude where the heat flow is at a maximum.

The structural engineer is faced with another formidable design task in dealing with aeroelastic and aerothermoelastic problems. The root cause is the flexibility of the structure and the deflection that accompanies each stress. Although the X–15 isn't as flexible as the wing of a jet transport, the effects on it of even minute distortion can be far-reaching. The difficulty is that though structural deflection is not objectionable, it induces additional aerodynamic forces from the change in angle between the structure and the airflow. This redistributes the airload and results in a further change in pressure forces and deflection, which continues until the aerodynamic forces and structural resistance are in equilibrium. Thus the rigidity of the structure appreciably affects the load it is subjected to. While rigidity influences fuselage design to some extent, it was a prime factor in the design of the thin wings and tail surfaces. For they must have not only adequate resistance to bending but also adequate torsional rigidity to resist twisting.

At high speeds, the large forces acting on surfaces require the designer to analyze more and more exactly these elastic deformations. Yet the solution for complex flow patterns and deflection from thermal expansion often does not yield to analysis. Another consequence of flight to speeds above the transonic region is that the airflow is characteristically fluctuating, and causes buffeting and vibrations. In some instances, resonances, or self-excited oscillations between airflow and structure, are encountered. This phenomenon, called flutter, is extremely complicated, since resonances are possible in any combination of bending and torsional oscillations.

Aeroelastic problems began to play a prominent role in high-speed aircraft design soon after World War II. Prior to that time, aircraft structures usually were sufficiently rigid and speeds sufficiently low to avoid most aeroelastic problems. But such problems had been encountered frequently enough during flight—often disastrously—to stimulate many studies into the phenomena.

By the early 1950's, much had been learned about the interactions of aerodynamic-elastic-inertial forces through theoretical analysis and experiment. But much remained vague and unknown. Each increase in speed seemed to compound the problems. Even simplified theories to account for interactions required such complicated systems of equations as to preclude their practical use in the era before modern, high-speed digital computers. Designers relied upon wind-tunnel tests with dynamically-scaled models to study the aeroelastic response of the structure. They sometimes obtained final verification only through slow and tedious flight tests.

The X–15's extension of flight conditions to Mach 6 and large aerodynamic forces represented a step into many new aeroelastic areas. At the time of the design, there were no experimental flutter data for speeds above Mach 3, and an adequate aerodynamic theory had not been established. To this perplexity was added the question of the effects of heating the structure to 1200° F. This high temperature not only reduces the strength but the stiffness of Inconel X, lessening its resistance to deflection.

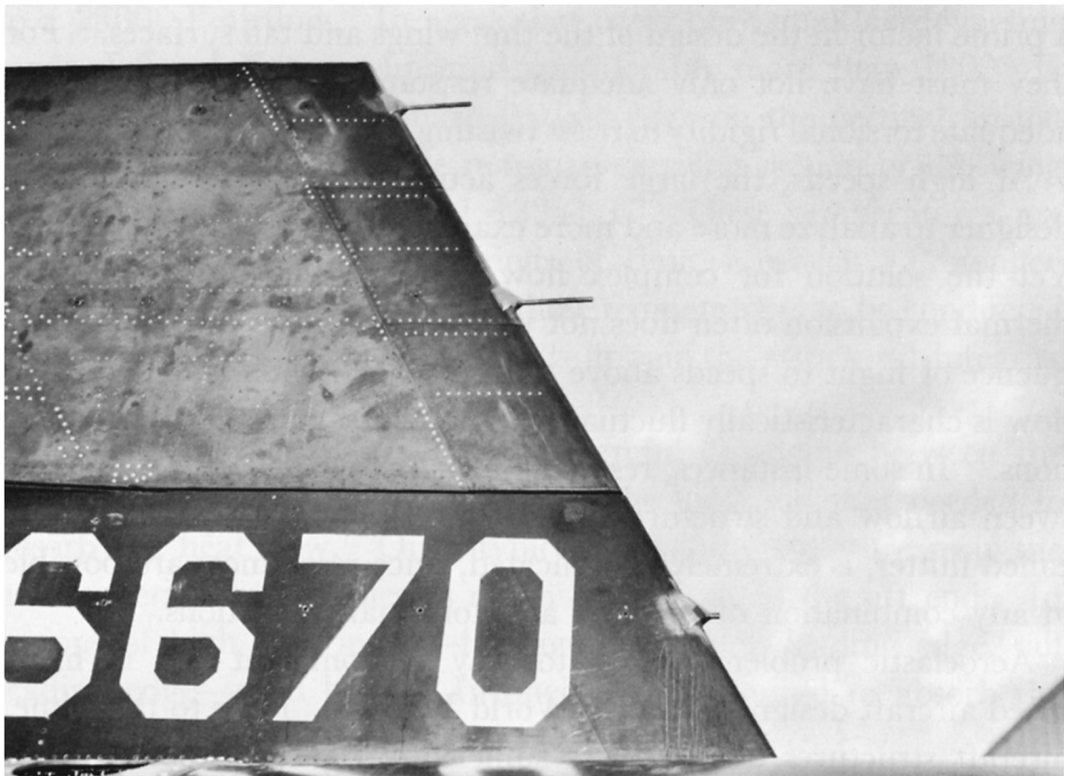

Pressure tubes in the leading edge of the X-15's upper vertical tail measure airflow conditions in the wake of the fuselage. The craft's instrumentation, elaborate despite weight and volume restrictions, measured pressure at 160 locations.

The thermal expansion of a hot structure reduces stiffness more markedly, however. The uneven heating of the structure produces large differences in the expansion of its various elements. The distortion caused by this uneven expansion seriously increases the aeroelastic problems, for it can reduce stiffness as much as 60 percent.

Although some aeroelastic problems could be scaled for wind-tunnel testing, no facility existed for combined testing of aerothermoelastic problems during the design period. (Later, some full-scale tests were made in a new NASA facility to proof-test the vertical tail at Mach 7 and design temperature and pressures.)

A rather novel test program was undertaken to overcome this potentially serious lack. Small dynamic models were tested in the "cold" condition, with their stiffness reduced to simulate the hot-structure condition. The amount of reduction in stiffness was determined from laboratory tests of structural samples subjected to the anticipated load-temperature variation with time during flight. A very extensive test program was carried out, including tests in eight different wind tunnels, at speeds to Mach 7.

From these various design conditions and procedures, a structure developed that bears many similarities to, as well as differences from, those of previous aircraft technology. The basic structure is a conventional monocoque design, in which the primary loads are carried in the external skin of the fuselage and wing. The fuselage skin also forms the outer shell of the propellant tanks. Thus, it must withstand the stresses from propellant weight as well as from internal tank pressurization. To absorb heat input, skin thicknesses on the forward fuselage are about three times those near the tail section. Fifteen feet aft from the nose, skin thickness is sized by load, rather than by heating, and is comparable to that of aluminum structure.

An important feature of the structural design is that only a small amount of the heat absorbed by the external skin is conducted, or radiated, to the internal structure. Consequently, much of the internal structure of the fuselage is of titanium and aluminum. Extensive use is made of corrugations and beading, to allow for uneven thermal expansion between external skin and internal structure.

The wing presented a difficult design problem, to account for uneven heating from leading edge to trailing edge and between lower and upper surfaces. At high angles of attack, inconsistent heating

typically subjects the wing's lower surface to temperatures 400° F higher than those of the upper surface. The result of higher heating at the leading edge and lower surface is that these two surfaces try to expand faster than the rest of the wing. Thus, the wing structure had to be designed to allow for this expansion without deforming to a large extent, while, at the same time, carrying rather large airloads. A balance was achieved by allowing some expansion of skin to alleviate a part of the thermally induced stresses, and by the use of titanium internal structure, which has a higher elasticity than Inconel X. The internal structure provides enough restraint between attach points to give the hot wing surfaces a tufted-pillow appearance as they try to expand. Corrugations in the internal structure allow it to flex enough to keep skin stress within tolerable limits.

The movable horizontal tail presented another knotty structural-design problem. Aerothermoelastic effects were severely complicated, since the movable surface could not be rigidly attached to the fuselage along the length of the inboard end. All loads had to be carried through the single pivot point, which made much more difficult the problem of maintaining adequate torsional rigidity. This problem was so predominant, in fact, that it was the basic factor governing the design of the horizontal tail. In order to achieve ade-

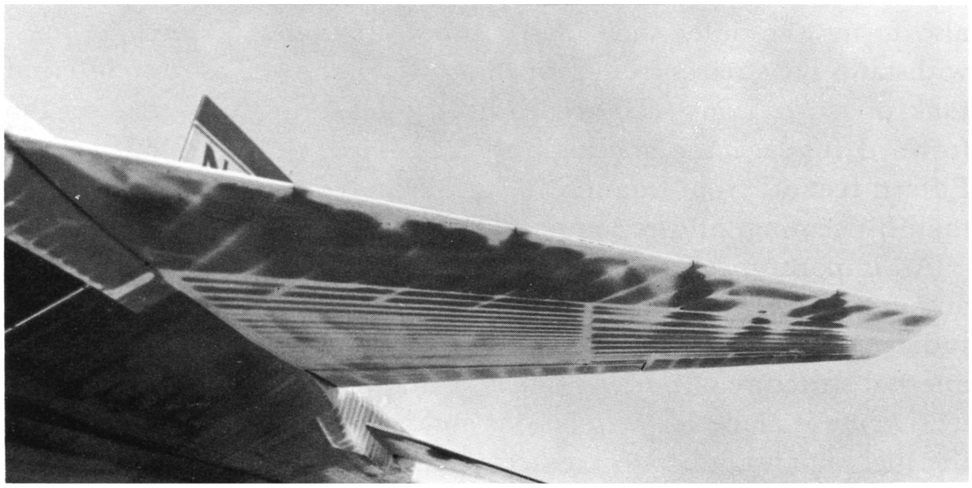

Temperature-indicating paint strikingly reveals the uneven heating to which the X–15's heat-sink wing structure was subjected during a high-heating mission. Dark areas indicate the higher temperature. Light areas reveal internal structure.

quate stiffness, the external surface here is restrained much more than the wing surface, and the pillowing effect at high temperature is quite marked. These are transient effects, however; no permanent deformation has been observed.

Despite the general information gained during design and construction, several interesting additional problems were uncovered during flight. It is not unusual that these problems occurred in regions of large aeroelastic and aerothermoelastic interactions, or in regions of large thermal stress.

A classical example of the interaction among aerodynamic flow, thermodynamic properties of air, and elastic characteristics of structure was the local buckling at four locations, just aft of the leading edge of the wing, during the first significant high-temperature flight to Mach 5. This buckling occurred directly back of the expansion slots that had been cut in the leading edge of the wing. The slots induced transition to turbulent flow, with an accompanying large increase in heat flow to the surrounding structure. The resulting

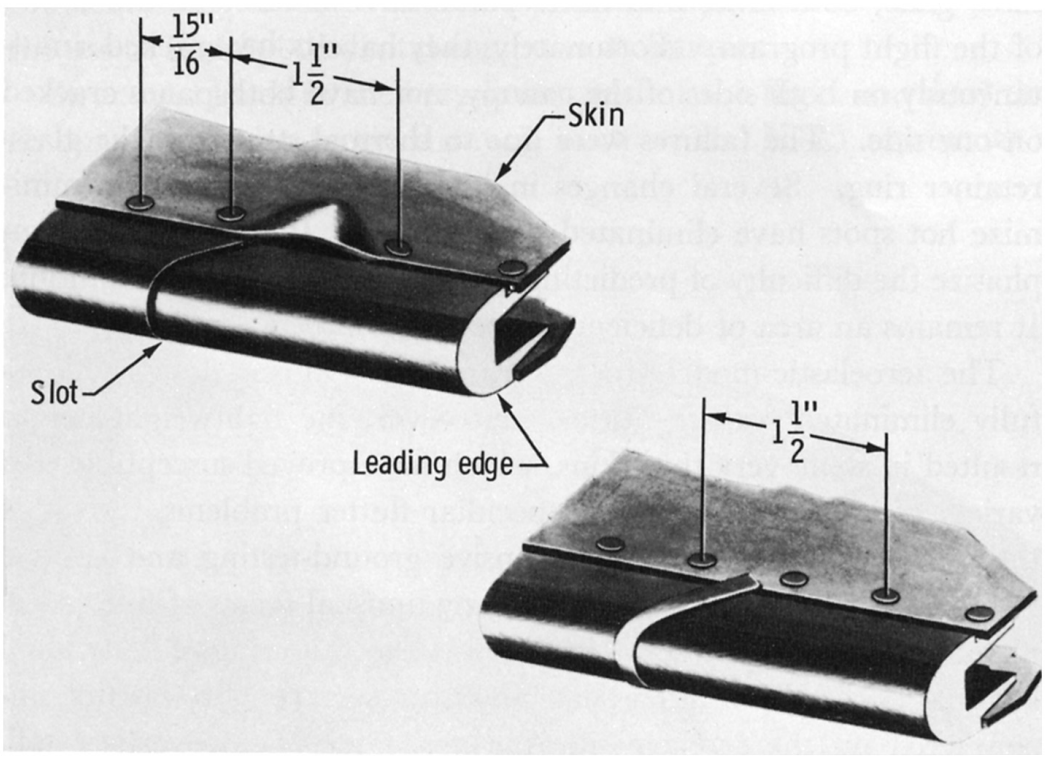

Top drawing shows a typical buckle in the wing skin of the X–15, caused by uneven expansion between the leading edge and the area directly behind it in hot airflow at hypersonic speed. Bottom drawing shows how covering the slots with small Inconel tabs and adding a rivet prevented recurrence of the buckling.

thermal stresses in the skin because of hot spots and uneven expansion produced small, lasting buckles in the wing surface. From this one flight, the problem of even small surface discontinuities was revealed, and the mechanism of the problem analyzed. Fortunately, the buckles could be removed, and relatively minor modifications were made to eliminate a recurrence. Additional expansion slots were cut, and thin cover plates were made for all slots, to prevent turbulent flow.

Another problem from turbulent flow has been the cracking of the canopy glass. The canopy protrudes into the airflow behind the nose shock wave, and, in combination with the flow around the fuselage, produces an unpredictable tangle of turbulent flow conditions. Although initial analysis indicated that the glass would be subjected to maximum temperatures of 750° F, more detailed studies revealed that the glass would be heated to the same maximum temperatures as the Inconel X structure. Structural integrity was seriously threatened, in consequence. Although the solution was a dual glass design, with an outer pane of high-temperature alumina-silica glass, both inner and outer panes have cracked in the course of the flight program. Fortunately, they have never cracked simultaneously on both sides of the canopy, nor have both panes cracked on one side. The failures were due to thermal stresses in the glass-retainer ring. Several changes in its shape and material to minimize hot spots have eliminated the problem. It has served to emphasize the difficulty of predicting thermal strsses for this condition. It remains an area of deficiency in research information.

The aeroelastic-model program carried out during design successfully eliminated surface flutter. However, the lightweight design resulted in some very thin skins, which have proved susceptible to a variety of vibration, noise, and peculiar flutter problems. Most of these were overcome during extensive ground-testing and captive B–52 flight tests. But one of the many unusual facets of flutter still plagued the flight program. This was the fluttering of individual external skin panels rather than an entire surface. It was first encountered on the fuselage side fairings, later on the vertical tail. Previous supersonic research had made it known, but it was not predicted to be a problem for the X–15. However, it was encountered at moderate supersonic speeds, and restricted flight operations over much of the corridor until a solution for it was found.

An extensive wind-tunnel and analysis program was carried out in conjunction with X–15 flight tests. By the time the program was completed, 38 panels on the airplane had been found susceptible to flutter. By good luck, relatively minor modifications, which stiffened the panels and increased their resistance to fluctuating airflow, eliminated the problem. Since this was the first occurrence of panel flutter to be well documented and explored, it stimulated much research into the basic mechanism.

More than 75 flights of the X–15 to high temperatures have demonstrated the soundness of the basic load-thermal-stress analysis. Much remains unknown about the magnitude of the individual airload and thermal stresses and deflections within the structure, however. For design, these unknowns were overcome through ingenuity and judgement in introducing assumptions for a simplified model of the structure. Sometimes, a simple beam suffices as a model. But researchers continue to try to develop models that will yield exact solutions for the distribution of load stresses and thermal stresses. For complex structure such as the X–15, it is a very difficult analysis problem trying to match actual responses to their model. It requires the use of high-speed digital-computer techniques.

Structural loads at the very lowest end of the flight corridor, the landing, have also received much study. The X–15 represents a

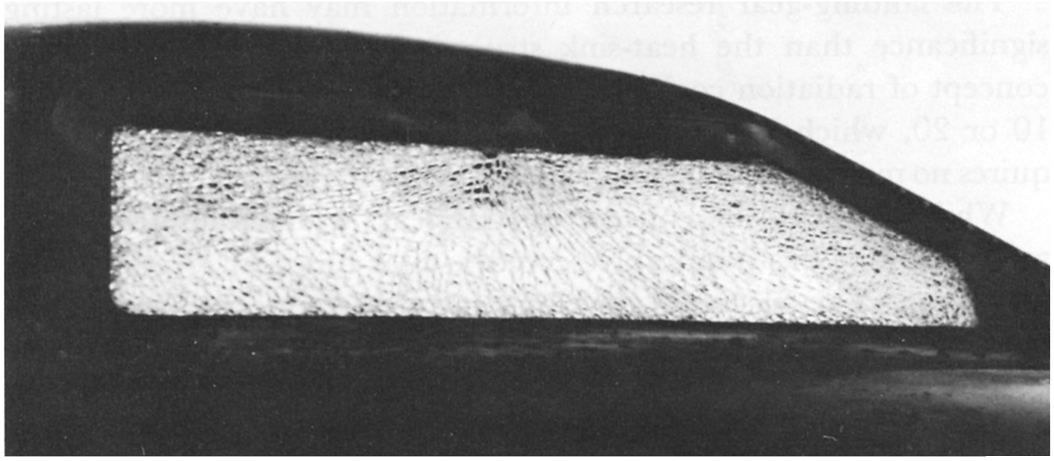

A noteworthy scar of the X–15's first flight to Mach 6 was this cracked outer panel on the right side of the windshield. Investigators found that thermal stresses higher than expected in the metal retainer holding the glass had caused the cracking.

a new class of reentry vehicles, for which the externally stored landing gear must be able to withstand high temperatures from aerodynamic heating, in addition to normal landing loads. The landing gear developed to meet these requirements for the X–15 is unusual. On a normal airplane, primary impact loads of landing are absorbed by the main gear, located close to the plane's center of gravity. But the extreme-aft location of the main landing skids on the X–15 produces dynamic-response characteristics during landing that are as unusual as the gear itself.

The primary cause of the unconventional response is the craft's downward rotation onto the nose gear immediately following the main gear's touchdown. Significantly, this movement onto the nose gear causes a subsequent rebound onto the main gear, providing a much higher load there than that at initial touchdown. In addition, the nose gear encounters loads that are two to three times greater than at either of the main-gear skids. Another unique feature is that the gear loads achieve about the same maximum level whether the pilot "greases-it-on" or lands with a high rate of descent. These new gear characteristics have not been without problems. Much study and analysis of the dynamic response of the airplane during landing has led to strengthening the gear and back-up structure and modifying the nose gear so as to provide greater energy absorption. The concept represents a distinct state-of-the-art advance for high-temperature, lightweight landing gears.

The landing-gear research information may have more lasting significance than the heat-sink structural development. A new concept of radiation cooling has been developed for flight to Mach 10 or 20, which limits structural temperatures to 3000° F yet requires no more structural weight than the X–15 has.

While the heat-sink concept now appears to have limited future application, it has admirably served a vital function for the X–15 program. The successful development of the concept has made it possible to explore hypersonic-airflow conditions of 2500° F with confidence. Certainly, the early philosophy that more could be learned from a hot structure has borne fruit. And, of course, much information pertinent to the response of the structure to airload and thermal stress has universal application. Deficiencies in research information have been pinpointed for the canopy, panel flutter, and aerothermoelastic effects. Although some details are still ob-

scure, engineers have a clearer understanding of the complex interactions between local airflow and structural response.

The success of this structural development is shown by the fact that speeds of Mach 6 and temperatures of 1200° F have been probed repeatedly. In addition, flights have been made to the high-air-pressure conditions at the lower boundary of the flight corridor between Mach 5 and Mach 6, which produced a maximum temperature of 1325° F. Thus, the full speed and temperature potentials of the X–15 have been achieved.

While the design-altitude goal of 250 000 feet has also been achieved (and actually exceeded by 100 000 feet), the full altitude potential of 400 000 feet has not been attained. The limit for flight above the corridor, however, is a compounding of many factors other than airloads and thermal effects. In fact, relatively low temperatures are encountered during a high-altitude flight, and thermal effects are of only minor importance. The primary limiting factors are the conditions encountered during reentry. These include consideration of over-all airplane response to the effects of structural load, aerodynamic flow, control system, and pilot control. Since these effects are transient in nature, reentry flight represents a difficult compounding of the dynamic response to flight to extreme altitudes.

CHAPTER 7

The Dynamics of Flight

ONE OF THE MOST VEXING PROBLEMS for the aerodynamicist is the dynamics of motion of an airplane as it moves through the atmosphere. Dynamics of motion relates aerodynamic forces to gravity forces, and since an airplane is free to rotate around any one of its three axes, the mass and inertia characteristics are also of major influence. The airplane must have correct and stable orientation along the desired flight path and also be maneuverable. It is significant that these were the last of the problems to be surmounted before man achieved sustained flight. This was the field of the most notable of the many contributions of the Wright Brothers.

Although the same fundamental problems had to be solved for the X–15 as for the Wright Flyer, the scope and magnitude of present-day problems are vastly greater. A wide range of nonlinear airflow conditions is encountered by the X–15 from subsonic to hypersonic speeds, and for angles of flow to 30 degrees. In addition, a wide range of air pressures is encountered for flight within the corridor, as well as a fall-off to zero pressure for the space-equivalent region above it. All these varied effects present formidable control tasks to the pilot. They require careful balancing of aerodynamic configuration, control system, and pilot capability to achieve satisfactory airplane maneuverability and dynamic response.

While dynamics of flight are important for flight to high speed, they are a critical factor for flight to high altitude and reentry. The X–15's maximum altitude was extended to 354 200 feet, but not until after much trial and error. The high angle of attack required for reentry from such heights was found to be a difficult control region. In fact, under certain conditions the X–15 would be dynamically uncontrollable there. Aerodynamicists had to break with traditional stability-and-control concepts when they found that old criteria did not apply to this new aerodynamic region. Ultimately,

a change in the X–15's vertical-tail configuration and a new control system were required to explore the craft's maximum potential. This work concentrated attention on dynamic-analysis techniques and the necessary, even critical, part that fail-safe electronic aids could play.

The dynamics of piloted flight is a field in which engineers and pilots have long had to discard familiar methods and assumptions and venture in new directions. This has resulted from continued study of the complex equations that describe the behavior of an airplane in flight. Such analysis provides a basis for understanding the motion of an aircraft along a flight path within the corridor, its navigation over the Earth's surface, and, more significantly, its angular rotation around its own center of mass. All of these factors are inextricably coupled and must be kept in proper balance.

The most important is a compromise between maneuvering control and inherent stability to maintain proper alignment along the flight path. This is not peculiar to aircraft flight. The maneuverability of a unicycle, for example, is much greater than that of a bicycle. But the lower stability of a unicycle is all too evident to the rider. Without the proper compromise, an airplane may be too stable and have limited maneuverability or be highly maneuverable but unstable, like a unicycle. The pilot can compensate for certain instabilities, and quite often he has to control an unstable aircraft condition. However, the history of aviation contains many tragic accidents that attest to the inherent danger involved, especially in regions of high air-pressure forces.

The fact that yawing and rolling motions are coupled severely complicates the stability-and-control problem. And though the tail surface provides stability in pitch and yaw, no purely aerodynamic means has been found to achieve roll stability, since the airflow remains symmetrical about the axis of rotation. The coupling between roll and yaw becomes more severe as vertical-tail size increases, and it has presented a multitude of problems to designers of high-speed aircraft.

The solution to the stability-and-control analysis is the development of an adequate mathematical model. But such an analysis also requires a mathematical model for the pilot. While the static displacements and force capabilities of a pilot actuating controls are well understood, the dynamic-response characteristics are not at all precisely defined. Some progress has been made for simplified tasks,

but no one has yet been able to develop a handbook model that accounts for differences between humans, or for the effects of environment, G-loads, fatigue, incentive, or intuition.

This seeming vacuum in stability-and-control analysis has been filled from study of the response of the pilot-airplane combination. Engineers have learned to utilize a pilot's natural attributes and to augment them, so that he can operate a highly complex machine. From this, engineers developed criteria for flying qualities that relate airplane maneuverability and response to aerodynamic-design parameters. These parameters are, perhaps, modern mathematical forms for the Wrights' "seat of the pants." They are based on empirical methods, though, and the X–15 would take stability and control far beyond previous knowledge. In addition, no criteria had been developed for flight at angles of attack above 10 degrees, or for the space-equivalent region. Even definition of an acceptable stability level was not always clear.

The X–15's Powerful Roll Damper

As speed and altitude increase, one pronounced effect on airplane control is a drastic decrease in the aerodynamic restoring forces that retard the oscillatory motions about the center of gravity. These restoring forces, which damp the motion, are effectively nonexistent over much of the X–15's flight regime, except at low speed and low altitude. Therefore, for precise control, it was necessary to provide artificial means for damping motions, through the control system. Damping about the pitch, roll and yaw axis had previously been something of a luxury for high-speed aircraft, but it became essential for the X–15. Furthermore, it had to be much more powerful than before. Previous automatic-damper systems bolstered pilot control only slightly, but the X–15 roll damper has twice the roll-control capability of the pilot. This strong stability-augmentation became a predominant part of the control system.

A far more significant evolution was taking place. Modern design practice had previously achieved a configuration that was stable and controllable without automatic controls, though it had become increasingly difficult at higher speeds and angles of attack. The advent of powered controls was an avenue for improving aerodynamic-control characteristics by incorporating electronic networks, in addition to the pilot, in the actuating of controls. This increases

system complexity, though, and the simplest pilot-control system that can accomplish the task is usually the best assurance of mission success. Experienced research pilots provide a degree of reliability unmatched by electronics. However, when the altitude above 250 000 feet came under assault, simplicity gave way to complexity. Quite a lot of electronic equipment was needed to perform automatic function essential to precise control for the reentry maneuver from the maximum altitude of 354 200 feet.

Operations have changed extensively from the original system in the course of the extensive flight-development program. Much has been learned about the use of a powerful damper system. Free play in control linkages and other effects of structural coupling with the control system have been troublesome. The critical dependence of proper control on the damper placed extra stress on system reliability, yet the consequences of a failure had to be anticipated. Originally, a fail-safe design, similar to that of the rocket engine, was considered mandatory. Any component failure would shut the system down. Modifications have improved fail-safe provisions and reliability. The system has evolved into one of duality and redundancy rather than simplicity.

The combination of stability augmentation and rolling tail has been eminently satisfactory for control from launch through reentry and landing. The new concept of combined roll and pitch control from horizontal-tail surfaces has proved to be trouble-free. Control during the powered phase of flight must be very precise, because the entire path of a 10–12-minute flight is established in the brief time of 85 seconds. Each flight consists of a climb along a predetermined flight path and either a pushover to level flight for a speed run or a fixed climb angle to reach high altitude. Techniques for trajectory control were developed on the flight simulator, with particular emphasis on backup or emergency modes for completing a mission in the event of component failures.

One flight-control area of early concern was the space-equivalent region, where jet reaction controls were to be used. Since the X–15 was the first aircraft to enter this region, the use of jet controls was an important research matter. An early objective was to determine criteria for the design and development of a system. Although new pilot-control techniques for space flight were acceptable, there could be no radical differences from aerodynamic control, for the pilot

would always be faced with the low-aerodynamic-pressure region of mixed aerodynamic and jet reaction controls. Experience warned that transition regions are usually the most troublesome. Since the primary factors depend upon a dynamic-control situation, the flight simulator was used as the primary tool for control-system design and development. One goal was to develop a system and techniques that would reduce the control rockets' consumption of propellants to a minimum.

Despite early fears, control in the space-equivalent region quickly proved to contain few problems. Initial evaluations were made with a simple ground test rig that simulated X–15 characteristics. Later, limited flight tests were made in the X–1B rocket airplane and in an F–104. This work encouraged confidence that there were no inherent problems for aircraft control with small rocket motors, though a number of difficulties with H_2O_2 systems were uncovered. Pilots found they could easily learn space control, and the idiosyncrasies of jet controls were minor compared to those of coupling aerodynamic controls. The early emphasis on the consumption of jet reaction fuel as a criterion has been less important to the flight program. Since the X–15's motions in the space-equivalent region are undamped, the original control system was modified to provide automatic damping through electronic control.

Problems of Reentry From Near-Space

Reentry from flight above the corridor presents the most serious flight-dynamics problems. At suborbital speeds, the X–15's reentry differs in many respects from the reentry, at near-orbital speeds, of a ballistic capsule. With the latter, the reentry problem is to dissipate kinetic energy in near-horizontal flight at high altitude, and to convert to a vertical descent path through the low-altitude region. The X–15's reentry, in contrast, starts from a steep descent path, which must be converted to a horizontal flight path. The serious problem for a ballistic capsule is the dissipation of energy in the form of heating. The X–15's reentry is made at speeds at which aerodynamic heating is not an important factor. Had this not been the case, its reentry would have involved much more serious problems.

Even so, many difficulties had to be overcome to push to altitudes above 200 000 and 300 000 feet. These very high altitudes require steeper angles for the reentry flight path, and more rapid flight into

the layers of atmospere within the corridor. They also produce more rapid change in the pilot's control sensitivity and the plane's dynamic response, while superimposing oscillations on the already high pullout forces required to keep from dipping too far into the corridor and exceeding the air-pressure limits. Another difficulty in returning from the higher altitudes is that the airplane approaches the structural design limits during pullout. Whereas considerable margin is allowable for reentries from 200 000 feet, the margin slims markedly as altitudes rise above that figure. It becomes a limiting factor. Thus, the reentry wasn't so important as just another new flight condition, or as an end in itself—the aftermath of every flight into space. It was important as a means of exploring the most severe flight-dynamics problems ever encountered in piloted aircraft.

The most serious problem that developed during the X–15's exploration of high altitude and reentry was that it could not have satisfactory control without automatic stability-augmentation during some of the most critical flight conditions. In the basic airplane, the pilot could, in fact, produce uncontrollable motions by trying to control either pitch or roll oscillations during reentry.

The pitch-control problem was not new. Neither was it serious, as long as the pilot did not attempt to control the oscillation. He could not gain precise control, but neither would the motions become divergent. However, the coupling between roll-yaw motions was such that he must use some control to keep the wings level, and without stability-augmentation at angles of attack above 8 to 10 degrees, any pilot control induced roll-yaw oscillations that diverged until the airplane was out of control.

From routine spadework during flight preparations, this serious control problem began to emerge as a critical flight region. While the original design criteria showed it to be an area for concern, they did not predict it to be an uncontrollable region. But dynamic instabilities are complicated phenomena, and previous experience had shown that it is often the severity of the problem, rather than the problem itself, that is unexpected.

The large vertical-tail surfaces maintain good directional stability at low and high angles of attack, and have a favorable effect on roll-yaw coupling at low angles of attack. But their effect on coupling at high angle of attack was known to be adverse. It was not clear at the time of the design which of these interacting forces

would turn out to be the more critical. Not until flight-simulator studies began extensively probing this region was the magnitude of the problem revealed. It illuminated the critical importance of the roll-damper for reentry flight from altitudes above about 250 000 feet.

A three-pronged attack on this problem was undertaken. Its goals were: (1) to develop analytical techiques to understand the dynamics of the problem, (2) to reduce the magnitude of the problem through aerodynamic means, (3) to reduce likelihood of roll-damper failure. As is often the case, all three approaches contributed to solving the problem. The lessening of adverse roll by removing part of the lower vertical tail has been discussed. Significantly, this change reduces stability by about half at high angle of attack, yet it improves pilot control. The speed brakes were used to provide an added increment of stability where necessary during other phases of flight.

Noteworthy was the development of an analytical technique that predicted the roll-yaw control problem and related its severity to familiar aerodynamic parameters. The dynamics of the critical roll-yaw coupling are now understood, and the analytical technique shows designers how to avoid similar problems in future hypersonic aircraft. Reliabilty of the stability-augmentation system was improved and the system modified to provide redundant components and operation after component failure.

This work was carried out while the X–15 flight tests were going on. Extensive use was made of an F–100C airplane, which was modified to duplicate the X–15's characteristics. One of the prime aids for dynamic analysis in developing satisfactory pilot-control-system configuration was the flight simulator.

Not every approach was satisfactory. Since the basic control problem comes from the use of normal pilot-control techniques, extensive simulator studies and limited flight tests were made for nonconventional control techniques, wherein roll control is used to control yaw rather than roll. A technique was developed on the simulator that permitted flight in the fringes of the uncontrolled region. Exploratory flight tests showed the technique to be very difficult to use in flight, though, and of doubtful use in an emergency. Thus, an area of caution developed in the application of flight-simulator results. Although unorthodox control techniques

for the X–15 have not been investigated further, they have been applied more promisingly to other flight programs. These new concepts may someday be accepted as suitable for control.

Development of Self-Adaptive Control

One very significant advance came from the development of a new control system for one of the three airplanes. The X–15 served to focus attention on the problem of obtaining satisfactory flying characteristics over the entire flight envelope. The increased performance of aircraft had stimulated research on a new concept for a control system during the mid-1950's, one that would adapt constantly to varying flight conditions. Under the stimulus of the Flight Control Laboratory at the Air Force Aeronautical Systems Division, this concept evolved into what is now known as the self-adaptive control system.

This is the centrally placed control panel of the X–15's remarkable and highly successful adaptive-control system.

By 1958, its feasibility had been demonstrated in flight tests of jet aircraft, and engineers were curious to find out if it could cope with the demanding flight conditions of the X–15. In early 1959, the Minneapolis Honeywell Corp. started the design of an adaptive-control system for the X–15. Although the primary intent was to test the technique in a true aerospace environment, it was decided to include in the system certain features that had evolved as important by-products of the self-adaptive concept. These were: dual redundancy for reliability; integration of aerodynamic and reaction controls; automatic stabilization for angle of attack, roll angle, and yaw angle.

The basic feature that distinguishes the adaptive system from other control systems is a gain-changer, which automatically adjusts the control-system gain so as to maintain the desired dynamic response. This response is governed by an electronic network that compares actual aircraft response with an ideal response, represented as a rate of roll, pitch, or yaw. Stability augmentation is provided by rate-gyro feedback for each axis.

Although adaptive control results in a number of unconventional flying characteristics, pilots are enthusiastic in their acceptance of it. An important feature is the integration of reaction controls and aerodynamic controls into a single, blended system. In combination with damping and automatic attitude control, this results in more precise command than was possible when a pilot worked the jet reaction controls himself.

The fail-safe provision of the adaptive-control system is a big improvement over that of the basic flight-control system. No single malfunction causes complete disengagement. Rigorous preflight and postflight check-out procedures are required, however, for the pilot cannot detect some malfunctions in flight.

Confidence in the system has grown so that it is now the preferred control system for high-altitude flights. It has enabled the X–15 to fly through more severe reentry conditions than it could have weathered without it. Not only does the adaptive system provide constant airplane response but it has excellent reliability and affords additional control modes for critical control tasks. This has increased pilots' confidence in automatic controls so much that consideration is being given to replacing mechanical linkages with electric wires. The adaptive concept may eventually enable a pilot to

control all stages of a multi-stage booster as well as the glide-reentry spacecraft that the booster hurls into orbit.

As the roll-yaw coupling problem came to be understood, flights progressed to higher and higher altitudes and more severe reentry conditions. Reentries from 250 000 feet were explored with the original vertical tail and original control system; from 300 000 feet with the original vertical tail and adaptive-control system; from 354 200 feet with the revised vertical tail and adaptive-control system. Fifteen reentries altogether have shown that piloted flight reentry is both possible and practical. To be sure, each reentry explored progressively more severe conditions.

There are still minor regions at high angle of attack in which the X–15 is uncontrollable, yet flight at high angle of attack has been increased three-fold, from 10° to 30°. This is one of the accomplishments that will lead to the day when space ferries shuttle back and forth through the corridor between Earth and orbiting space laboratories.

The approach-and-landing maneuver following reentry has also been a fruitful area for research. It might seem that the navigation, approach, and landing of an X–15 would demand extraordinary piloting skill, since the pilot guides the airplane with power off from a position 100 miles away to landings that now average only 1000 feet from the intended touchdown location. Yet most X–15 pilots would point out that hitting the desired point is not a demanding task, for the craft's aerodynamic characteristics are conducive to spot landings. The critical nature of the landing task is to keep from hitting the spot at too high a vertical velocity, because of the steep approach angles.

These steep approach angles result from one of the penalties of a hypersonic configuration, the high drag at subsonic speeds, which in turn produces high rates of descent. In addition, relatively high approach speeds are required, which greatly reduce the time available for the flare maneuver. The combination of high rate of descent near the ground and short flare time leaves little margin for error in piloting judgment. For the X–15, "dive" angle might be a more appropriate term than glide angle, for it has encountered rates of descent as high as 30 000 feet per minute. Previous rocket airplanes seldom descended faster than 6000 feet per minute during approach.

In spite of anticipated difficulties, no landing problems caused by piloting errors have been encountered in some 120 flights. Confidence accordingly has developed in the belief that landings can be made with configurations that produce even steeper descent paths.

This confidence was achieved through extensive study to develop suitable techniques. The techniques were arrived at through analysis and through flight in airplanes that were altered to simulate the X–15's aerodynamic characteristics. This work started with an F–104 and F–100C, about one year before the first X–15 flight. The F–104, in particular, because of its close resemblance to the X–15, was used to define approach and optimum flare techniques. It continues to be an important training aid. Significantly, what appeared at first to be a severe landing problem was overcome not by altering any aerodynamic characteristics but by coming to appreciate the fact that they are not the limiting factors. Operational techniques were developed that significantly increased the time available for final corrections after the completion of the flare, and thus have given the pilot a margin for error commensurate with that in more conventional aircraft. This flexibility has reduced what at first appeared to be a critical maneuver to a routine one.

Thus, from launch to landing, unique dynamic flight conditions that place new demands on aircraft, controls, and pilot have been investigated. The reentry maneuver, more than any other, highlighted problems of hypersonic stability and control, and showed the need for the vital blending and augmenting of pilot control. Pilots are now willing to accept the fact that a direct link to the control system is not always possible, and electrical signals may have to be substituted. Both pilots and engineers plan with confidence piloted flight exploration of new aerodynamic conditions to be encountered farther up the manned, maneuverable flight corridor.

Significantly, the acceptance of electronic aids has not lessened the importance of the pilot or forecast his impending replacement. While exploratory flight research is very exacting, perhaps more important factors are versatility and flexibility. And for these functions, experienced research pilots are as yet unmatched by "black boxes." Thus, maximum use of the pilots' capabilities enables them to fill many demands in addition to those of flight control.

CHAPTER 8

Man-Machine Integration

IN 120 FLIGHTS during the past five years, the X–15 has achieved its mission research objectives in 110, or 92 percent of the total. This remarkably high degree of mission success is in striking contrast to that of unmanned space vehicles of the X–15's own design era. As a result, the X–15 program has often been thrust into the running debate over manned-versus-unmanned-vehicles as proof of the superiority of piloted aircraft over automatically controlled devices.

However, the X–15 program alone cannot disprove the merits of unmanned vehicles, since it contributes to only one side of the argument. Nor, on the other hand, does it glorify the role of the pilot, for it was only through the use of automatic controls for some operations that the full potential of the X–15 was utilized. Rather, the real significance of its excellent mission reliability is that it has shown that the basic philosophy of classical, piloted aircraft operation is just as applicable to the realm of hypersonic and space flight as it is to supersonic flight. That philosophy decrees that the pilot is indispensable, and that he must be able to override any automatic control, bringing his skill and training to bear upon deficiencies of machinery.

This concept was not universally accepted at the time the X–15 was designed. Many aeronautical experts were afraid that the pilot might be taking too large a step into unknown areas, and that automatic devices and systems could better accomplish his task. Airplanes and control systems have changed radically since the Wright Flyer, they argued, but pilots have not.

Those who pioneered the X–15 concept were well aware of the limitations of the human operator. They had no illusions that research pilots, no matter how well-trained, could get along without aid if called upon to control a rapidly oscillating system. Neither

had the pilots, for they were no less engineers than pilots. Where the X–15 pioneers and pilots differed from engineers arguing for unmanned systems was in fully understanding the advantages of the human operator.

By utilizing man's capabilities, the X–15 systems were made much simpler than automatic operations would have been, notably for launching, maneuvering, and landing. Beginning with the earliest studies, the suggestions of experienced research pilots have been an integral part of the program. One objective was to remove as many unknowns as possible for the pilot before the flight program began. Another was to make sure that the pilot's task in flight tests would become a realistic continuation of his previous experience and training. The question of whether or not a pilot could control the X–15 while sustaining a force of 6 G's became one of how to provide this capability, so that the pilot could maintain control and not restrict aircraft performance. In shepherding the X–15 through "normal" flights that start at zero-G at launch and often end with a 10–G landing impact, pilots have had to learn new tricks and approach old procedures warily.

Pilots who were destined to be first to fly the X–15 were selected soon after the program got underway. In keeping with the joint nature of the project, representatives of North American Aviation, the Air Force, the Navy, and NASA were assigned to the program as project pilots. North American Aviation selected A. S. Crossfield, a former rocket-plane pilot for NACA, to make the contractor demonstration flights. The Air Forces assigned Capt. I. C. Kincheloe, of X–2 fame, and Capt. (now Lt. Col.) R. M. White. NASA named J. A. Walker, Chief Research Pilot at the Flight Research Center; N. A. Armstrong; and J. B. McKay, each an experienced rocket-plane pilot. To this early group was added Lt. Comdr. (now Cmdr.) F. S. Petersen, of the Navy, in mid-1958. The untimely death of Capt. Kincheloe (one of the earliest and most vigorous X–15 proponents), in late 1958, elevated Capt. White to the position of Air Force project pilot, and Capt. (now Maj.) R. A. Rushworth came into the program. M. O. Thompson, of NASA, and Capt. J. H. Engle, of the Air Force, joined the original group in 1962. The X–15 team also benefited from the contributions of many pilots not assigned to the program, who were active in the early studies of NASA, Air Force, and Navy.

A vital link between X–15 pilots and the accomplishment of their various research missions is the craft's instrument display. The pilots accomplish the major phase of every flight solely by reference to cockpit instruments. Thus, the instruments are no less important than the control system. In spite of the X–15's large range of operating conditions, its cockpit display is rather conventional. Some instruments were consolidated, new instruments were added, and there have been later modifications, but basically the cockpit is representative of 1957–58 instrumentation techniques.

The basic flight-guidance instrument is an indicator that displays the three airplane-attitude angles together with angle of attack and angle of yaw. Grouped around this instrument are a G-indicator, altitude and speed indicators, and a stop watch for timing rocket-engine operation. A coarse-and-fine-attitude indicator and an angle-of-attack indicator are also required.

The entire present team of X–15 research pilots includes, from left to right, John B. McKay (NASA), Joseph A. Walker (NASA), Milton O. Thompson (NASA), Maj. Robert A. Rushworth (USAF), and Capt. Joe H. Engle (USAF). Previous X-15 pilots at various times were A. Scott Crossfield (NAA), Neil A. Armstrong (NASA), Lt. Comdr. Forrest S. Petersen (USN), and Maj. Robert M. White (USAF).

Emphasis was placed upon backup or alternate displays rather than sophisticated guidance schemes. The pilot controls the airplane to achieve a programed, memorized flight plan. Since this does not include precise trajectory guidance, accurate instrument and display sensitivity was not originally provided. This technique has been adequate for the exploratory flight program, and actual flight conditions proved to be within about ten percent of desired conditions.

Later flights, however, have required more precise control, and several special pseudo-guidance and display systems have been utilized. The low-altitude, high-heating flights have demanded very precise flight-path control to arrive at desired test conditions. This is especially critical during the first 40 seconds. If those initial conditions are in error, the pilot doesn't have adequate time to correct the flight path. The original cockpit display wasn't adequate for accomplishing these flights with repeatable precision. Modifications to provide the pilot with additional information, such as airflow temperature and air pressures, have been explored with some success. These instruments necessitated the development of new procedures for measurement and computation as well as for cockpit display.

Another important adjunct to integrating the X–15 pilot with his airplane is a pressure suit, to protect against reduced atmospheric pressure at high altitude. For the human body, space flight begins at an altitude of about 55 000 feet, and at that height a pilot has to have a pressure suit to survive in case something goes wrong with the cockpit pressurization system. It was highly desirable to use proven equipment for this critical item, but a suitable pressure suit at first was not available. While suits that provided the desired pressure protection had been developed, they were very cumbersome. When pressurized, they practically immobilized the pilot. The X–15 pilot would need to operate the controls when his suit was pressurized. Moreover, the suit would be an integral part of the escape system and would have to be able to withstand high air temperatures and pressures.

A suit that met these requirements was developed by the David C. Clark Co., which had created a means of giving the wearer high mobility. The key to its design is a link-net type of material, which covers a rubberized pressure garment. The suit is not just a protective garment that the pilot dons, like a parachute, but an integral

Chief Research Pilot Joseph A. Walker, of NASA's Flight Research Center, Edwards, Calif., stands beside an X–15 in full-pressure suit, the type that provides all X–15 pilots with livable atmosphere during flight. The dark tube attached to Walker leads to a portable unit that supplies each pressure-suit wearer with essential air-conditioning on the ground.

part of his environment. It provides both cooling and ventilation, supplies breathing oxygen, and contains parachute harness, earphones, microphone, pressure regulators, electrical leads for physiological equipment, and a system to prevent visor-fogging.

The pressure suit began as another major undeveloped subsystem for the X–15. Its advanced form today represents a state-of-the-art improvement. At one time the pace of the X–15's flight program depended on the course of the suit's development.

Along with other X–15 systems, the pressure suit has undergone continuous improvement and updating. It has operated satisfactorily on several flights in which partial cockpit pressurization was lost at altitudes above 100 000 feet. Although the suit was designed specifically for the X–15, its technology has been utilized in other programs, notably Mercury and Gemini. An adaptation of the X–15 suit has become standard apparel for fighter squadrons of the Air Force's Air Defense Command.

Aeromedical aspects of piloting a plane at hypersonic speeds and in space were early a controversial aspect of the X–15 program. Some experts in aviation medicine viewed with great concern the flight environment that X–15 pilots would encounter. In particular, they were apprehensive of weightless flight, an unknown region in the mid-1950's.

This concern was not universally shared, especially not by research pilots. However, everybody agreed that the X–15 pilots would face the most demanding tasks yet encountered in flight. If the X–15 did not represent the limit of human endurance, it was time to find out whether or not there was a limit. It was recognized that whereas techniques to analyze airplane characteristics had been developed to a high degree of perfection, no means existed for analyzing the psychomotor performance of a pilot. Thus, a primary research objective was to fill some of the gaps in knowledge of the pilot's physiological response.

Physiological measurements and analysis in flight were rather meager prior to the X–15 program. The limited flight data that had been obtained had been gathered specifically for aeromedical analysis. In the X–15 program, by contrast, the aeromedical measurements would be incidental to the research mission. They would provide data not only under a true operational flight condition but in a severe environment.

The work has combined the efforts of the Aeromedical Laboratory at the Air Force Aeronautical Systems Division, Wright-Patterson Air Force Base, Ohio; the Bioastronautics Branch of the AFFTC; and the Air Force School of Aviation Medicine, San Antonio, Texas. A major portion of it has been the development of instrumentation techniques as an integral part of the pressure suit. Originally the instrumentation recorded electrocardiograph, skin temperatures, oxygen flow, and suit pressures. It has undergone continuous change, the latest development being a means of measuring blood pressure in flight.

Startling Increase in Heart Rate

The basic measurements of interest for aeromedical analysis are heart rate, breathing rate, and blood pressure. Since blood pressure was not measured at the start of the program, the first analysis centered upon heart rate and breathing rate as measures of the dynamic response of the body to physiological stresses. The initial measurements were somewhat startling to aeromedical experts, for heart rates averaged 145 to 160 beats per minute. On some flights, they rose as high as 185 beats per minute, and never fell below 145. When associated with physical stress, such high rates normally have a grave prognosis. However, as data accumulated from additional pilots, aeromedical researchers gained insight into the interplay between psychic and physical stresses of flights of this nature. Most of the increase in heart rate, they found, occurred before the X–15 was launched from the B–52, and thus reflected a keying up and anticipation rather than direct physical stress.

Later, analysis of blood-pressure measurements confirmed the previous conclusions that psychological factors were the primary influence on heart rate. Aeromedical researchers now have a better understanding of man's adaptation to hypersonic and space flight. Significantly, what at first appeared to be excessive heart rates are now accepted as norms, forming a baseline for pilot response.

The aeromedical investigation has since extended to monitoring additional cardiovascular dynamics. While these techniques are being developed, and their data interpreted, groundwork is being laid for comprehensive analysis of a pilot's psychomotor performance. Perhaps it may someday make it possible to develop a mathematical model of a pilot from psychomotor analysis, just as the

aeronautical engineer has arrived at an approximate mathematical model for aircraft stability from dynamic-response analysis of aircraft motions.

The X–15 program achieved another significant first in analyzing to what degree the pilot contributed to mission success. This work began as an attempt to find a basis for comparing X–15 reliabilities with those of unmanned vehicles. While the exploratory work has not yielded a rigorous technique, it has roused considerable interest and brought the viewpoints for judging respective reliability of piloted and unmanned flight vehicles into better focus, if not agreement. Significantly, the X–15 record of mission success on 92 percent of its flights has been achieved with individual system and subsystem reliabilities as low as 80 percent. While the use of component redundancy overcame some of the shortcomings in critical systems, a more important contribution to safety and success has been the capability of the pilot to bypass failed systems or change to alternate modes of operation.

In spite of the X–15's excellent mission-reliability record, the program has had its share of serious malfunctions and operating problems. These difficulties caused three major accidents, which required varying degrees of aircraft rebuilding. The X–15 program has suffered from what has always been a major aircraft problem—complex reactions to the failure of simple components.

The accidents pointed out the serious consequences of two or more minor, or unrelated, malfunctions. One X–15 was literally blown in half when a pressure regulator and a relief valve failed amost simultaneously during ground tests and pressurized the ammonia tank beyond the structural limit. The pressure regulator froze because of an accumulation of moisture and its proximity to liquid-oxygen and helium lines. The relief valve did not operate when tank pressure became excessive because of high back-pressure from an ammonia-vapor disposal system used only for ground operation. As a result of the explosion, fail-safe concepts have been applied to ground tests in addition to flight operations.

Two other X–15 accidents occurred during emergency landings at alternate dry lakes following abnormal shutdown of the rocket engine. In each case, two unrelated system failures contributed to a third, which was a major structural failure at touchdown, even though the pilot had made a satisfactory landing.

The X–15's long and valuable research program has been marred by only three serious accidents, none of which involved a fatality. One was an explosion and fire on a test stand. The others are shown here. Above: a fuselage split open on landing after two unrelated system failures precipitated a major structural failure. The plane was back in the air within three months. Below: another dual failure made the landing gear collapse at touchdown, swerving the plane into a crippling, high-speed rollover and injuring the pilot, John B. McKay. The pilot fully recovered; the airplane was rebuilt (shown on page 96).

One such landing resulted in abnormally high loads because of a heavyweight condition from incomplete jettisoning of all unused propellants, and only partial cushioning of the nose impact by the nose-gear shock strut. When the nose wheels touched down, the fuselage buckled just aft of the cockpit, causing it to drag on the ground. Fortunately, the damage was easily repaired, and the airplane was back in the air within three months.

The second landing mishap was far more serious. In that instance, the landing flaps failed to come down, but the pilot, Jack McKay, made a perfect landing for the condition which requires a high-speed touchdown (in this case, 290 mph). As the airplane rotated onto the nose gear, the high aerodynamic down loads on the horizontal tail at that speed, in combination with rebound load following nose-gear impact, caused the left main landing gear to collapse. The airplane swerved broadside and rolled over, damaging wings, demolishing tail surfaces, and injuring McKay, who suffered three crushed vertebrae.

Both pilot and craft have since returned to flight status. McKay, though shortened by three-quarters of an inch, was back flying another X–15 within six months. His damaged craft was slower to return to work. It was modified extensively, and a year and a half passed before it was back in the air.

These mishaps have forcefully shown that the interplay between complex systems has to be analyzed down to the smallest detail. The importance of such analysis has led to exploratory work with electronic computers in an effort to simulate and study X–15 systems, and thereby obtain better understanding for the design of the more advanced vehicles that may follow it.

Other aspects of the X–15 program should also have a far-reaching influence on the operation of future manned aerospace vehicles. The fact that the pilot has contributed notably to mission reliability while in full command should stimulate work toward thoroughly integrating the pilot's capabilities with future vehicles from their inception. In addition, man-rating a system has come to mean more than assurance of safe operations. The use of the pilot to control many automatic functions not only helps insure safe and reliable operation but makes less complex systems feasible.

Perhaps the strongest indication of the flexibility obtained by integrating airplane, pilot, controls, and display is that the X–15 is

now used for research purposes far different from those envisioned by the men who pioneered the concept. The primary research areas have been probed until few secrets remain. Researchers have turned their interest to other intriguing problems that have come into view with the space age. The X–15 program has embarked on studies allied to satellites and rocket-borne probes rather than to aircraft flight research. Thus, not only has the program opened up to piloted aircraft the realm of hypersonic and reentry flight, it has also thrust piloted flight into a space-equivalent region, heretofore the exclusive domain of unmanned systems.

CHAPTER 9

A Flying Laboratory

FROM ITS INITIAL, broad-scale attacks on hypersonic and space-equivalent flight, the X–15 program shifted to an increasingly detailed probing of airflow and aerodynamic forces. The precise knowledge gained enabled researchers to explore the limits of the flight corridor with understanding and confidence.

As the X–15's primary role neared its conclusion, scientists both within and outside the aerospace disciplines expressed interest in making use of the aircraft's unmatched research capability. Some of them were involved in the expanding scientific assault upon space. Others were hoping to develop lighter, simpler, or more versatile aircraft to fly in the same realm as the X–15, and wanted it as a testing ground for their ideas. Because of these various interests, the X–15 program began to take on a new character.

The hypersonic thoroughbred has become a workhorse, dutifully carrying a weird variety of equipment and experiments and repeatedly exposing the payloads to high-temperature airflow, hypersonic aerodynamic force, or the space-equivalent region. Some of these experiments change the X–15 from a research airplane to a kind of space probe, such as Vanguard or Pioneer. Other experiments are pertinent to the development of supersonic transports and Mach 10 aircraft. The changing research program is perhaps best exemplified in the X–15–2, a modified version of the original craft, which may ultimately extend flight in the corridor to Mach 8.

Several tests are underway and many more are planned. Included in this program are high-temperature structural components, ranging from cermet (protectively coated) skids for the landing gear to special, detachable wingtips. Another study will include tests of heat exchangers under weightless conditions to verify performance analysis. A new type of supersonic decelerator for the recovery of payloads from space will also be evaluated.

The X–15 program is also capable of opening some windows in

the atmosphere that shrouds the Earth. Satellites are thoroughly exploring the region above 100 miles. Balloon-borne instruments continue to probe the region below 20 miles. But many difficulties face an experimenter who is interested in measurements between

Here's the X–15–2 (rebuilt following the McKay accident) with jettisonable fuel tanks attached to its side fairings. Those tanks carry an extra 13 500 lb. of propellants and will boost the plane's top speed to Mach 8 or provide longer flights. The plane's surface must be covered with an ablative coating to protect its structure from the 4000-deg. air temperatures of Mach 8 flight.

those two altitudes. Prior to the X–15 program, rocket probes filled in some of this gap in information, but the recovery of a rocket payload is uncertain, and a rocket passes through the region in question in a very short period of time. The X–15, on the other hand, can stay appreciably longer in this area that is so difficult to explore by other means. In addition, it provides a controlled platform for relatively large experiments, and returns each payload to Earth intact.

To date, it has carried out five high-altitude experiments, and seven others are programed for the future. These experiments include the collection of micrometeorite particles, the measurement of sky brightness at high altitude, and efforts to find out how accurately special instruments can determine the Earth's horizon. The latter measurements are aiding in the design of instruments to be used to navigate the Apollo spacecraft to the Moon.

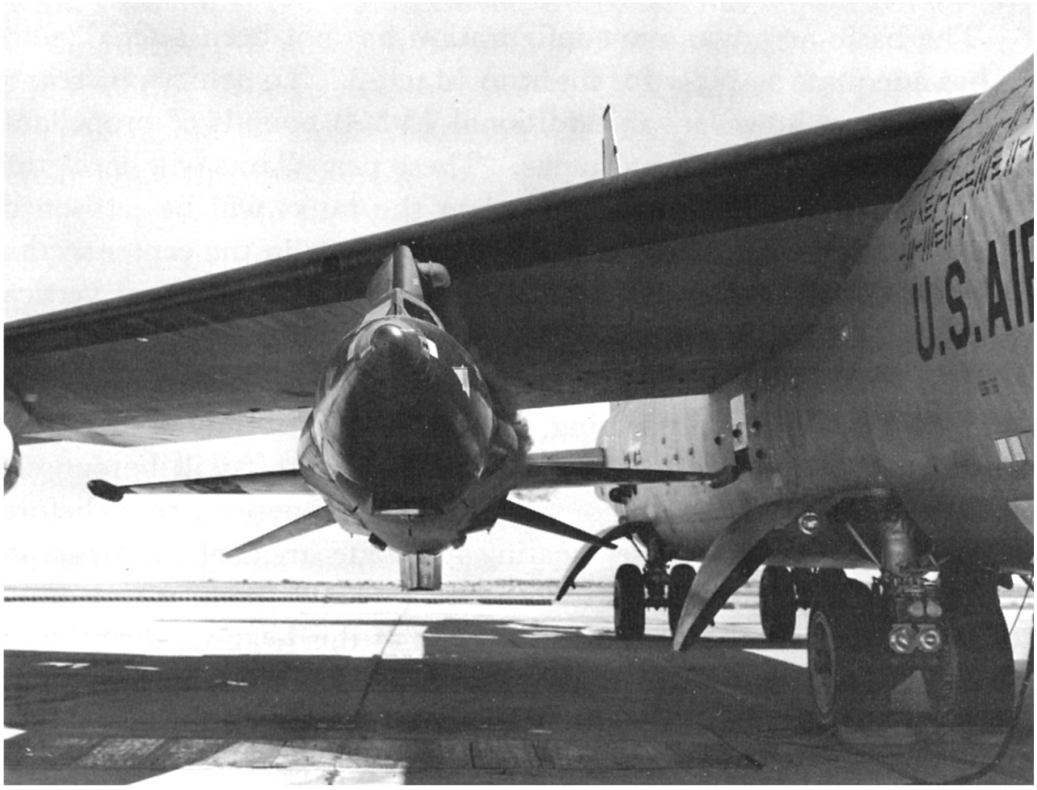

An X–15 with pods fastened to its wingtips for the collection of micrometeorite particles at high altitude is seen here attached to a B–52 drop plane just prior to takeoff on one of its most recent research missions.

The X–15 has also made radiation measurements in the visible, infrared, and ultraviolet spectra. While the results have not upset any scientific theories, they have provided invaluable information on the background-noise level for the design of satellite and manned-spacecraft instrumentation systems. A key asset that the X–15 provides for this work is its ability to carry out detailed post-flight instrument calibrations after systems have been exposed to a new environment. Such calibration is denied to most space experiments. Even the common solar cell has yet to be calibrated in the laboratory, operated in space, and then recovered for final laboratory recalibration. Plans are underway for the X–15 to provide this desired capability.

Following serious damage to one of the original X–15's during McKay's emergency landing, in late 1962, North American Aviation engineers proposed to rebuild that airplane into an X–15 with Mach 8 capability. The data obtained during the research program had given them a detailed picture of the problems, so they could design for higher speeds with greater precision.

The basic aerodynamic configuration has not been altered, since it has adequate stability for flight to Mach 8. To achieve increased performance, however, an additional 13 500 pounds of propellants are carried in two external tanks. These propellants will accelerate the X–15–2 to about Mach 2, when the tanks will be jettisoned. Other modifications have added compartments in the center section of the fuselage, and at the aft ends of the side fairings and vertical tail, for carrying extra test equipment and scientific experiments.

The major obstacle that confronts the modified X–15–2 is the increased aerodynanic heating for Mach 8. Not only does the airflow temperature rise to 4000° F but the aircraft will be exposed to high temperatures for considerably longer periods than before. This combination increases heating for some areas of the structure by a factor of eight over a Mach 6 flight. Since the heat-sink structure can withstand only a small fraction of this heating, the solution comes from adding a protective coating to the outer surface. This coating is similar to the ablative materials that protect ballistic-entry capsules.

Ablative materials have never before been applied to aircraft. The entire external surface of the X–15–2 must be covered, yet if the coating were applied in thick layers, it would produce a prohibi-

tive increase in weight. Thus, while the forward surfaces may require as much as three-quarters of an inch of coating, most of the airplane will be protected by much less—.050-inch in some areas. The ablative material must be reapplied after each flight.

This program should provide much useful information about the use of ablative materials on lifting surfaces. If they prove to be practical for repeated use, the airplane may find a new role in testing ramjet or turbo-rocket propulsion systems. At present, the development of advanced propulsion systems is greatly hindered by lack of suitable ground-test facilities for speeds above Mach 6. The X–15–2 is being studied as one potential means of overcoming this deficiency. A program to mount test engines in place of the lower vertical tail is underway, though as yet its feasibility is still under study. Any such engine will be too small to provide additional performance for the X–15, but it will provide valid test results that can be applied to full-scale engines for future hypersonic craft.

The X–15–2 represents a significant change in the research program. Enabling the craft to achieve Mach 8 has required not only new materials but new components and new operating procedures. The scientific experiments that the X–15–2 carries have grown in scope to include complex, astronomical equipment, which occupies one-half of the instrument compartment. It comprises a stellar tracking instrument for photographing the ultraviolet radiation from selected stars. Its use will demand flights for that purpose alone and force the pilot to perform an intricate space-control maneuver. He must precisely align the airplane with specific stars (by instrument, not by sight) during flight into the space-equivalent region.

Eventually, the X–15 seems certain to add a host of new roles to its lengthy list of research accomplishments. It has already underscored one fundamental fact—the difficulty of determining in advance what may be learned from a research program of this nature. Certainly, it has filled one role envisioned by its pioneers—that of stimulating research.

Perhaps the only goal the program has not achieved is that of stimulating work on a successor. Since the initiation of the U.S. research-airplane program, in 1946, aircraft speeds have doubled every six years. A projection of this pace past that set by the X–15 predicts flight to Mach 12 by 1967. But the space age has largely eclipsed aerodynamic flight, and no plans are as yet underway for a

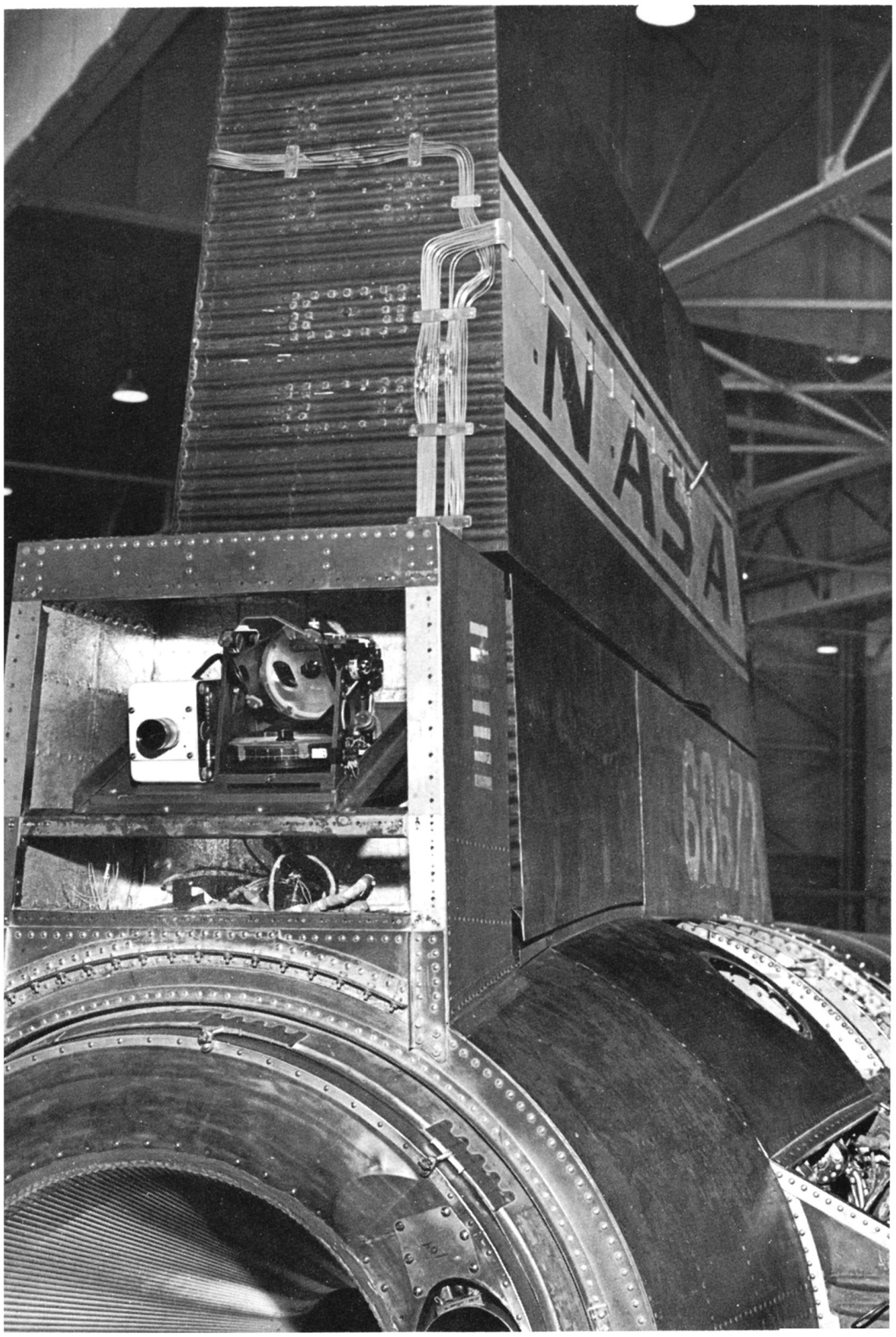

An infrared horizon-scanner, with cover plate removed, is seen here in its compartment behind the upper speed brakes of an X-15 before a research flight to high altitude. The instrument helped measure background noise for the design of satellite instruments. Those bundles of stainless-steel pressure tubes on the aft end of the upper vertical tail lead to pressure rakes on the sides of the tail.

follow-on research airplane. Since such developments typically take about five years, from feasibility study to first flight, the X-15 seems destined to hold its place as the world's most advanced airplane for many years. And who can foresee what technology may bring during that period to end, or to extend, the X-15 program?

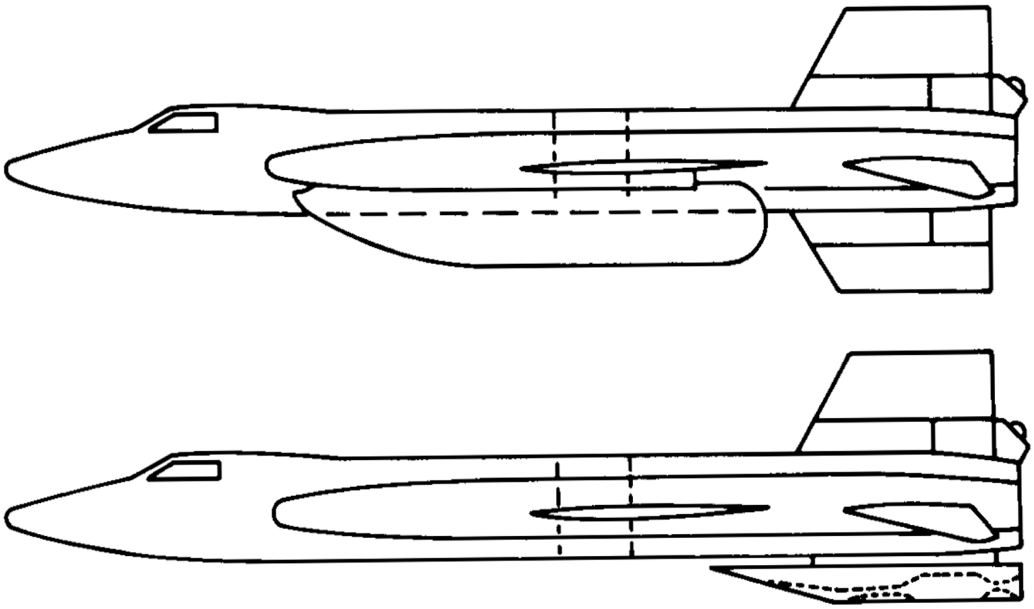

Above are outline drawings of two structural modifications of the X–15 for further research. Both involve a 29-inch extension of the fuselage. The topmost profile reveals the plane with underwing tanks and additional propellants for probing speeds to Mach 8. The lower profile above shows the X–15 modified for in-flight study of small ramjet engines, carried in the area usually occupied by the ventral fin. The drawing below shows how a modified X–15 will make leading-edge (1) and panel (2) experiments, and environmental tests with detachable wingtips (3).

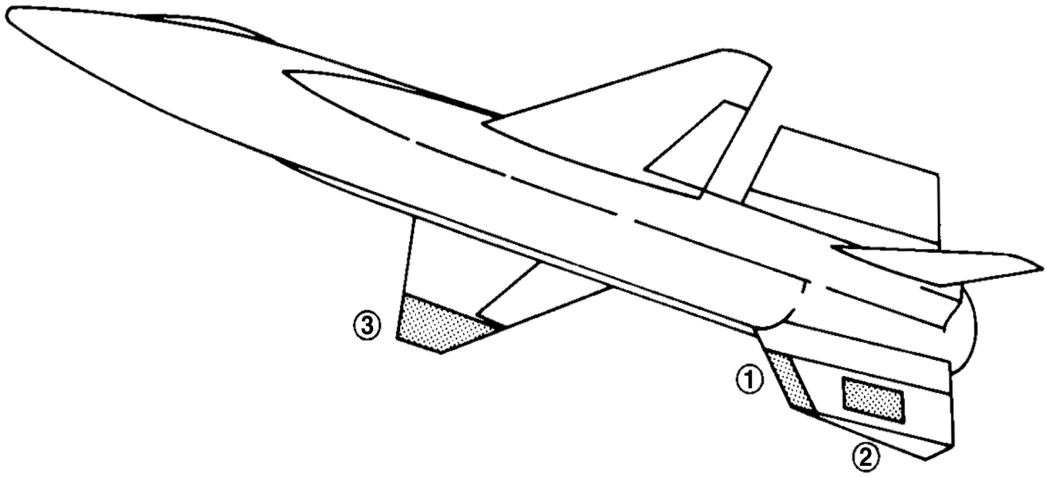

The publications identified as NASA TM X *and* TN D *in the following Bibliography may by purchased from the Clearinghouse for Federal Scientific and Technical Information, Springfield, Virginia 22151. The* PROCEEDINGS OF THE SECOND NATIONAL CONFERENCE ON THE PEACEFUL USES OF SPACE *is available from the Superintendent of Documents, U.S. Government Printing Office, Washington, D.C. 20402.*

Bibliography

Aerodynamic Characteristics

Aerodynamic Heating

BANNER, R. D.; AND KINSLER, M. R., "Status of X–15 Aerodynamic-Heating Studies," ARS Report No. 1629–61, 1961.

Summary of flight-test results to Mach 3.

REED, R. D.; AND WATTS, J. D., "Skin and Structural Temperatures Measured on the X–15 Airplane During a Flight to a Mach Number of 3.3," NASA TM X–468, 1961.

Survey of the structural temperatures at a few selected locations and for specific conditions.

Drag Characteristics

SALTZMAN, E. J., "Preliminary Full-Scale Power-Off Drag of the X–15 Airplane for Mach Numbers from .7 to 3.l," NASA TM X–430, 1960.

Comparison of flight results with wind-tunnel tests and theory.

SALTZMAN, E. J., "Preliminary Base Pressures Obtained from the X–15 Airplane at Mach Numbers from 1.1 to 3.2," NASA TN D–1056, 1961.

Comparison of flight results with wind-tunnel tests, semiempirical estimates, and theory (base drag only).

HOPKINS, E. J.; FETTERMAN, D. E. JR.; AND SALTZMAN, E. J., "Comparison of Full-Scale Lift and Drag Characteristics of the X–15 Airplane with Wind-Tunnel Results and Theory," NASA TM X–713, 1962.

Limited comparison to show deficiencies in theory and wind-tunnel techniques.

SALTZMAN, E. J., "Flight Base Pressure Coefficients Obtained from the X–15 Airplane for Mach Numbers to 6," NASA TN D–2420, 1964.

Survey of base drag characteristics and comparison with wind-tunnel measurements and with theory.

General Review

WALKER, H. J.; AND WOLOWICZ, C. H., "Stability and Control Derivatives Characteristics of the X-15 Airplane," NASA TM X-714, 1962.

Brief review of pertinent aerodynamic characteristics as determined from flight tests.

YANCEY, R. B.; REDIESS, H. A.; AND ROBINSON, G. H., "Aerodynamic-Derivative Characteristics of the X-15 Research Airplane as Determined from Flight Tests for Mach Numbers from .6 to 3.4," NASA TN D-1060, 1962.

Flight results and comparison with wind-tunnel data to Mach 3.4. Appendix presents data-reduction and analysis techniques for hypersonic speeds.

Pressure Forces

KEENER, E. R.; AND PEMBO, C., "Aerodynamic Forces on Components of the X-15 Airplane," NASA TM X-712, 1962.

Limited measurements of the pressure forces to Mach 6.

KORDES, E. E.; AND TANNER, C. S., "Preliminary Results of Boundary-Layer Noise Measured on the X-15 Airplane," Proceedings, 2nd Inter. Conference on Acoustical Fatigue, Dayton, April-May, 1964.

Measuring techniques and results from one flight to Mach 5.3.

PYLE, J. S., "Comparison of Flight Pressure Measurements with Wind-Tunnel Data and Theory for the Forward Fuselage of the X-15 Airplane at Mach Numbers from 0.8 to 6.0," NASA TN D-2241, 1964.

Flight measurements and theoretical calculations.

Background and History

WILLIAMS, W. C.; AND DRAKE, H. M., "The Research Airplane—Past, Present, and Future," Aero. Eng. Review 17 (1): 36-41, Jan., 1958.

History and highlights of the joint Air Force-Navy-NACA Research Airplane Program through 1957.

WILLIAMS, W. C., "The Airplane as a Research Tool," IAS Report No. 59-79, presented at IAS 27th Annual Meeting, New York, Jan., 1959.

Discusses philosophy, techniques, and role of research aircraft as means for obtaining research information. Pre-X-15 flight tests.

"The Rocket Research Aircraft Program—1946-1962," AFSC Historical Publications Series 62-110 V, Air Force Flight Test Center, 1962.

History, chronology, and description of the various research-airplane programs. Contains list of pilots who were active in these programs.

MARTIN, J. A., "The Record-Setting Research Airplanes," Aerospace Engineering 21 (12): 49–54, Dec., 1962.

A compilation of the unofficial records of the rocket airplanes through mid-1962.

"Thirty-Five Years of Winged Rocket Flight," The Thiokol Magazine, Thiokol Chemical Corp., 1963.

Brief review of rocket-airplane history from 1928 to 1963.

"X–15 Research Aircraft," System Package Program—System 653A, AeronauticaI Systems Division, Air Force Systems Command, 22 July, 1963.

Reviews management, logistics, and financial support for the X–15 program subsequent to 1963.

BECKER, J. V., "The X–15 Project," Astronautics and Aeronautics 2 (2): 52–61, Feb., 1964.

A history of the research activities leading to the design and development of the X–15.

DRAKE, H. M., "Aerodynainic Testing Using Special Aircraft," in Proceedings, Aerodynamic Testing Conference, Washington, March, 1964, American Institute of Aeronautics and Astronautics.

Discusses role of special test aircraft, including X–15, in the field of aeronautical research.

Design Features and Development

Air-Conditioning System

BOUMAN, C. P., "X–15's Cryogenic Cooling System is Simple and Lightweight," Space/Aeronautics, 36 (5), Part 1, 61–63, Nov., 1961.

Description of air-conditioning and pressurization system and development problems.

Escape System

HEGENWALD, J. F., JR.; MADDON, J. F.; AND PENROD, P. R., "X–15 Research Aircraft Emergency Escape System," AGARD Report 243, 1959.

General review of the design, development, and test program for the stabilized ejection seat.

Flow-Direction Sensor

"Technical Description and Operating Instructions—NASA Flow-Direction and Pitot-Pressure Sensor," Nortronics Report 60-46, 1960.

Design features and operation of hypersonic angle-of-attack and yaw-angle sensor.

Hydraulic System

HOHMANN, C. J., "Designing a Hydraulic Pump for the X-15," Hydraulics & Pneumatics 15 (12): 75-77, Dec., 1962.

Description and specifications for the hydraulic pump.

CULLETON, R. J., "High Temperature and Vibration-Prime Parameters for X-15 Hydraulic Design," Hydraulics & Pneumatics 15 (12): 70-73, Dec., 1962.

Pertinent features of the system, fluid, seals, and unusual requirements.

Inertial System

"Handbook of Operating and Maintenance Instructions for the All Attitude Flight Data System," Sperry Pub. No. CA-33-0001, prepared for WADC USAF Contract AF33 (600)-35397 Proj. No. 1373, 1960.

Detailed description of theory, operation, and maintenance of the inertial-reference system.

JUDGE, JOHN F., "X-15 Flight Data System—A Precursor," Missiles and Rockets, Feb. 27, 1961, 42-44.

General description of functions and design of the inertial-reference system for attitude-angle and velocity measurement.

Reaction Jet Controls

MERRICK G. B., "X-15 Controlled in Space by Reaction-Control Rocket System," SAE Journal, Aug., 1960, 38-41.

Description of system development, including flight simulation, of the reaction jet controls.

Rocket Engine

SEAMAN, R. W.; AND SMITH, D. S., "Flight Rating Test Demonstration of the XLR-99-RM-1 Rocket Engine," ARS Paper 1409-60, 1960.

Discussion of requirements and demonstration program for the flight-rating of the XLR-99 engine.

BARTON, H. A.; AND CRAMER, G. R., "Rocket Engines for Manned Vehicles," Missile Design & Development, Nov., 1960, 14–14, 46, 58.

Discussion of fail-safe and manned-flight considerations for XLR–99 engine.

LUPERI, M. J.; AND TICK, S. J., "Vibration and Combustion Investigation of the LR-99 Engine," ARS Paper 1720–61, ARS Propellants, Combustion, and Liquid Rockets Conference, Palm Beach, 1961.

Description of combustion-instability phenomena related to severe vibrations experienced with XLR–99 engine.

DAVIES, H., "The Design and Development of the Thiokol XLR-99 Rocket Engine for the X–15 Aircraft," Journal of the Royal Aeronautical Society 67 (626): 79–91, Feb., 1963.

Detailed description of engine design, performance, and test program.

Structure

SCHLEICHER, R. L., "Structural Design of the X–15," Journal of the Royal Aeronautical Society 67 (10): 618–636, Oct., 1963.

Thorough review of the design and test program for structural development.

Summary

MELLINGER, G. R., "Design and Operation of the X–15 Hypersonic Research Airplane," AGARD Report 288, Oct., 1960.

General description of airplane and systems.

Experiments

CLARK, W. M.; AND MULDOON, H. A., "High Altitude Sky Luminance Measurement," Northrop Nortronics Paper presented at 9th National IRIS Symposium, Dallas, May, 1963.

Results of measurements for three X–15 flights, one of which attained 280 000–ft. altitude.

THOMAS, L. P., "The X–15 as a Zero-Gravity Test Facility," in Proceedings, Zero-Gravity Fluid Behavior Review and Planning Meeting, NASA, Washington, D.C., Oct., 1963.

Description of the X–15's capability for zero-gravity tests.

LARSON, T. J.; AND MONTOYA, E. J., "Stratosphere and Mesosphere Density-Height Profiles Obtained with the X–15 Airplane," NASA TM X–56009, 1964.

Density-height profiles from 16 to 74 kilometers' altittide for six X-15 flights.

Flight Dynamics

Adaptive-Control System

BOSKOVICH, B.; COLE, G. H.; AND MELLEN, D. L., "Advanced Flight Vehicle Self-Adaptive Flight Control System," WADD Tech. Report, 60-651, Part 1, Contract No. AF 33 (616)-6610, Project No. 8226, Task No. 10889, U.S. Air Force, 1960.

Description of design and operation of adaptive system.

BAILEY, A. J., JR., "Development and Flight Test of Adaptive Controls for the X-15," in Supersonic Transport Symposium, SETP Quarterly Rev. V (4): 3-23,1961.

General discussion of adaptive principle and development of X-15 system.

TAYLOR, L. W., JR.; AND ADKINS, E. J., "Adaptive Flight Control Systems—Pro and Con," NASA TM X-56008,1964.

Description of development of, and operating experience with, the adaptive system.

Flight-Control System

HOLLADAY, W. L.; AND HOFFMAN, D. P., "Systems Approach to Flight Controls," Astronautics 36-37, 74-80, May, 1962.

Systems-analysis techniques used during the developnient of the flight controls.

TAYLOR, L. W., JR.; AND MERRICK, G. B., "X-15 Airplane Stability Augmentation System," NASA TN D-1157, 1962.

Highlights of the development and flight-testing of the control system.

TREMANT, R. A., "Operational Experiences and Characteristics of the X-15 Flight Control System," NASA TN D-1402, 1962.

Detailed description of control system: characteristics, operating problems, modifications, and reliability.

General Flight Characteristics

TAYLOR, L. W., JR., "Analysis of a Pilot-Airplane Lateral Instability Experienced with the X-15 Airplane," NASA TN D-1059, 1961.

Analytical techniques developed to explain roll-yaw coupling problem.

PETERSEN, F. S.; REDIESS, H. A.; AND WEIL, J., "Lateral-Directional Control Characteristics of the X-15 Airplane," NASA TM X–726, 1962.

Detailed discussion of the roll-yaw coupling problem, and successful and unsuccessful solutions.

WHITE, R. M.; ROBINSON, G. H.; AND MATRANGA, G. J., "Résumé of Handling Qualities of the X–15 Airplane," NASA TM X–715, 1962.

Highlights of exploratory-research phase of program. Discusses flight maneuvers from launch to landing.

HOLLEMAN, E. C.; AND ADKINS, E. J., "Contributions of the X–15 Program to Lifting Entry Technology," AIAA Aerospace Sciences Meeting, New York, Jan., 1964.

Description of flight-control system and flight characteristics for powered flight, space-equivalent flight, and reentry.

Landing

GAINES, L. M.; AND SURBER, T. E., "Prediction of Optimum Approach and Landing Techniques for Manned Reentry Gliders," IAS–ARS Joint Meeting, Los Angeles, June, 1961, Paper No. 61–115–1809.

Description of the interplay of various factors important to landing maneuver. Compares results from 15 landings with analytical techniques.

MATRANGA, G. J., "Analysis of X–15 Landing Approach and Flare Characteristics Determined from the First 30 Flights," NASA TN D–1057, 1961.

Discussion of conditions and problems encountered during the approach pattern and the flare to touchdown.

HOEY, R. G., "Horizontal Landing Techniques for Hypersonic Vehicles," AGARD Report No. 428, 1963.

Discussion of navigation phase to landing site, and description of factors important to favorable landing experience with the X–15.

JOHNSTON, E. W.; AND GAINES, L. M., "Low-Speed Characteristics and Piloting Techniques of Landing the X–15 Research Airplane on Earth and Other Planets," in "Dynamics of Manned Lifting Planetary Entry," ed. by S. M. Scala, New York: John Wiley & Sons. Inc., 1963, pp. 668–700.

Discussion of X–15 landing techniques and of their potential application to landings on Venus and Mars.

Powered Flight

HOLLEMAN, E. C., "Piloting Performance During the Boost of the X-15 Airplane to High Altitude," NASA TN D-2289, 1964.

Discussion of piloting techniques utilized during flights to high altitudes.

Reaction Controls

JARVIS, C. R.; AND ADKINS, E. J., "Operational Experience with X-15 Reaction Controls," SAE-ASME Air Transport and Space Meeting, New York, April, 1964, Paper 857G.

Brief review of the development and flight experience with the reaction jet controls.

Flight Research

B-52 and Launch

ALFORD, W. J.; AND TAYLOR, R. T., "Aerodynamic Characteristics of the X-15/B-52 Combination," NASA Memo. 6-8-59L, 1959.

Analysis program, including wind-tunnel and dynamic-model tests, for the X-15 launching characteristics.

ADALFH, C. E.; ALLAVIE, J. E.; AND BOCK, C. C., JR., "Flight Evaluation of the B-52 Carrier Airplane for the X-15," AFFTC TR 60-33, 1960.

Results of testing B-52-and-X-15 combination and the procedures used during typical launch mission.

MATRANGA, G. J., "Launch Characteristics of the X-15 Research Airplane as Determined in Flight," NASA TN D-723, 1961.

Description of launch characteristics from analysis of first 16 air-launch operations.

Dynamic Flight Simulation

CLARK, C. C.; AND HARDY, J. D., "Preparing Man for Space Flight," Astronautics, Feb., 1959, 18-21, 88-90.

Description of the capabilities and potentialities of the centrifuge and its use as a flight simulator for the X-15 and future projects.

HARDY, J. D.; AND CLARK, C. C., "The Development of Dynamic Flight Simulation," Aero/Space Engineering, 18 (6): 48-52, June, 1959.

Development of dynamic flight simulation and adaptation of the human centrifuge to closed-loop control for the X-15 program.

CLARK, C. C.; AND WOODLING, C. H., "Centrifuge Simulation of the X-15 Research Aircraft," NADC-MA-5916, Aviation Medical Acceleration laboratory, Naval Air Development Center, 1959.

Detailed review of the procedures and tests performed during the X-15 centrifuge programs. Discusses restraint systems, cockpit instruments, control system, and pilot performance.

BERRY, D. T., "An Evaluation of a Variable Stability Airplane Simulation of the X-15," AFFTC-TR-61-42, 1961.

Description of an exploratory variable-stability-airplane simulation of the X-15 performed with a T-33 jet trainer.

Flight Operations Experience

ROW, P. V.; AND FISCHEL, J., "X-15 Flight-Test Experience," Astronautics and Aerospace Engineering 1 (5): 25-32, June, 1963.

Review of flight-test experience with emphasis on the operating problems and difficulties encountered.

MAHER, J. F.; OTTINGER, C. W.; AND CAPASSO, V. N., "YLR99-RM-1 Rocket Engine Operating Experience in the X-15 Aircraft," NASA TN D-2391, 1964.

Review of flight-operating experience, problems, and maintenance requirements for the engine.

Flight Planning

JOHNSTON, E. W.; AND JOHNSON, R. H., "Analysis of Sub-Orbital Vehicle Reentry Constraints," ARS Lifting Reentry Vehicles: Structures, Materials, and Design Conference, Palm Springs, April, 1961, NAA Report NA-61-167, 1961.

Discussion of reentry study as related to constraints from temperature, loads, angle of attack, and energy considerations.

HOEY, R. G., "Flight Planning and Conduct of the X-15 Envelope Expansion with Interim XLR-11 Rocket Engines," AFFTC TDR-62-7, 1962.

General summary for flights to Mach 3 and 135 000-ft. altitude. Discusses High Range facility, emergency lake facilities, and flight-control center.

HOEY, R. G.; AND DAY, R. E., "Mission Planning and Operational Procedures for the X-15 Airplane," NASA TN D-1158, 1962.

Detailed review of the techniques used during the exploratory-research phase of the program.

Flight Simulation

DAY, R. E., "Training Aspects of the X–15 Program," Proceedings Report of a Working Group Conference: Panel on Psychology, Armed Forces-National Research Council Committee on Bioastronautics, Woods Hole, Aug., 1960, 5–14, 1961.

Simulation techniques as related to pilot training.

COOPER, N. R., "X–15 Flight Simulation Program," Aerospace Engineering, Vol. 20, Nov., 1961, 16–17, 71–77.

Detailed review of the various simulation programs conducted during the design and development program. Describes equipment and procedures.

HOLLEMAN, E. C.; AND WILSON, W. S., "Flight-Simulator Requirements for High-Performance Aircraft Based on X-15 Experience," ASME Paper No. 63–AHGT–81, 1963.

Discussion of use of X–15 flight simulator during the research-flight phase of the program.

High Range

ARMSTRONG, N. A., "X–15 Operations: Electronics and the Pilot," Astronautics, May, 1960.

Description of High Range facility and ground-monitoring support for the X–15 program.

Research and Pilot Instrumentation

LARSON, T. J.; AND WEBB, L. D., "Calibrations of Pressure-Type Airspeed-Altitude Systems of the X–15 Airplane from Subsonic to High Supersonic Speeds," NASA TN D–1724, 1963.

Flight data pertinent to pressure-measuring systems to Mach 4.

SANDERSON, K. C., "The X–15 Flight Test Instrumentation," 3rd International Flight Test Symposium, Buckinghamshire, Eng.; April, 1964.

Detailed review and description of research instrumentation and measuring techniques.

FISCHEL, J.; AND WEBB, J. D., "Flight-Informational Sensors, Display, and Space Control of the X–15 Airplane for Atmospheric and Near-Space Flight Missions," NASA TN D–2407, 1964.

Description of conventional and unconventional sensing and pilot-display techniques utilized on the X–15.

Research Techniques

VIDEAN, E. N.; BANNER, R. D.; AND SMITH, J. P., "The Application of Analog and Digital Computer Techniques in the X-15 Flight Research Program," Proceedings International Symposium on Analog and Digital Techniques Applied to Aeronautics, Liege, Sept., 1963.

Aerodynamic-heating and stability-analysis techniques used to monitor and predict flight conditions.

Man-Machine Integration

Bioastronautics and Pressure Suit

ROWEN, B., "Biomedical Monitoring of the X–15 Program," AFFTC–TN–61–4, 1961.

Summary of measurements for eight flights: heart rate, respiration rate, and body temperature.

ROWEN, B., "Bioastronautics Support of the X–15 Program," AFFTC–TDR–61–61, 1961.

Description of two versions of pressure suit, physiological instrumentation, and results from one flight to Mach 6.

BRATT, H. R.; AND KURAMOTO, M. J., "Biomedical Flight Data Collection," ISA Journal, Oct., 1963, 57–62.

Development of biomedical measuring, telemetry techniques, and monitoring systems for the X–15 and future aerospace vehicles.

Mission Reliability

DRAKE, J. R., "The Pilot's Contribution to Mission Reliability on the X–15 Program," ARS Paper 1128–60, 1960.

Review of piloted-flight philosophy as applied to the X–15.

NAGEL, R. A., "X–15 Pilot-in-the-Loop and Redundant Emergency Systems Evaluation," AFFTC Tech. Doc. Report No. 62–20, 1962.

Detailed analysis of first 47 flights. Summarizes mission, system, and component reliabilities. Appendix summarizes flight record and attempted flights.

Pilot Display

WALKER, J. A., "Some Concepts of Pilot's Presentation," in SETP Quarterly Review, 4 (2): 90–96, Winter, 1959.

Discussion of X–15 pilot's display used in early flights.

Pilot Viewpoints

CROSSFIELD, A. S.; AND BLAIR, C., JR., "Always Another Dawn," Cleveland and New York, The World Publishing Co., 1960.

Pertinent to design and contractor demonstration flights.

WHITE, MAJ. R. M., "X-15 Program Status Report, Part I," AND WALKER, J. A., "X-15 Program Status Report, Part II," in Proceedings Symposium "The Age of Omni-Sonic Flight," SETP Quarterly Review V (2): 145-152 (Part I) and 153-160 (Part 11), Winter, 1960.

Summary of program for flights to Mach 3.2.

WHITE, MAJ. R. M., "X-15 Operations in Pre-Lunar Studies," in Lectures in Aerospace Medicine, Brooks AFB, Jan., 1962, 191-210.

Summary of program for flights to Mach 6 and 217 000-ft. altitude.

PETERSON, F. S., COMDR., USN, "Research Program Report—X-15," Naval Aviation News, 6-10, May, 1962.

Summary of experience with the X-15 program.

WALKER, J. A., "The X-15 Program," in Proceedings IAS-NASA Meeting, St. Louis, April-May, 1962.

Highlights of program for flights to Mach 6 and altitudes to 200 000 ft.

RUSHWORTH, R. A., "Pilot Experience with the X-15 Airplane," in Proceedings 12th AGARD General Assembly, Paris, July, 1962, 117-123.

Air Force test pilot's view of the X-15 program.

Structural Loads

Aerothermoelastic Effects

KORDES, E. E.; REED, R. D.; AND DAWDY, A. L., "Structural Heating Experiences on the X-15 Airplane," NASA TM X-711, 1962.

Highlights of structural-heating effects and problems up to Mach 6.

GARRICK, I. E., "A Survey of Aerothermoelasticity," Aerospace Engineering 22 (1): 140-147, Jan., 1963.

Summary of technical problem areas and interdisciplinary elements. Describes some considerations for the X-15.

Dynamic Loads Including Flutter

JORDAN, G. H.; MCLEOD, N. J.; AND GUY, L. D., "Structural Dynamic

Experiences of the X–15 Airplane," NASA TN D–1158, 1962.

Brief review of structural dynamic and flutter problems encountered during the development and flight-test program.

KORTES, E. E.; AND NOLL, R. B., "Flight Flutter Results for Flat Rectangular Panels," NASA TN D–1058, 1962.

Brief review of X–15 panel-flutter phenomena. Presents semi-empirical correlation parameters for flutter analysis.

Landing

MCKAY, J. M.; AND SCOTT, B. J., "Landing-Gear Behavior During Touchdown and Runout for 17 Landings of the X–15 Research Airplane," NASA TM X–518, 1961.

Detailed analysis and review of landing–gear characteristics and dynamic-response problems for first 17 flights.

MCKAY, J. M.; AND KORDES, E. E., "Landing Loads and Dynamics of the X–5 Airplane," NASA TM X–639, 1962.

Brief summary of landing-gear dynamics and loads.

NOLL, R. B.; JARVIS, C. R.; PEMBO, C.; LOCK, W. P.; AND SCOTT, B. J., "Aerodynamic and Control-System Contributions to the X–15 Airplane Landing-Gear Loads," NASA TN D–2090, 1963.

Summary for 77 flights. Describes analytical techniques.

NOLL, R. B.; AND HALASEY, R. L., "Theoretical Investigation of the Slideout Dynamics of a Vehicle Equipped with a Tricycle Skid-Type Landing-Gear System," NASA TN D–1828, 1963.

Comparison of flight-test data with calculated distance, lateral displacement, and effects of aerodynamic control.

Summary Papers

MELLINGER, G. R., "The X–15," Aerospace Engineering 20 (8): 12–13, 26–38, Aug., 1961.

A look at the development of the X–15 from the manufacturer's viewpoint.

WEIL, J., "Review of the X–15 Program," NASA TN D–1278, 1962.

Summary of the flight program (exploratory) to Mach 6 and 200-000–ft. altitude.

KORDES, E. E., "Experience with the X–15 Airplane in Relation to Problems of Reentry Vehicles," presented at 3rd Congress of the

International Council of the Aeronautical Sciences, Stockholm, Aug.–Sept., 1962.

Discussion of panel flutter, landing dynamics, flight-control system, aerodynamic and structural heating, and problems that developed through mid-1962.

ARMSTRONG, N. A.; WALKER, J. A.; PETERSEN, COMDR. F. S.; AND WHITE, MAJ. R. M., "The X–15 Flight Program," in Proceedings 2nd National Conference on the Peaceful Uses of Space, Seattle, May, 1962, 263–271, 1962.

Pilots' views of the X–15 program.

TOLL, T. A., AND FISCHEL, J., "The X–15 Project: Results and New Research," Astronautics and Aeronautics 2 (3): 20–28, March, 1964.

A research engineer's consideration of the results of the X–15 flight program.

Index

A

Ablative materials, 96, 98–99
Accidents, X–15, 90–92
Adaptive control, acceptance by pilots, 79, 81
Aerodynamic drag, F–104 fighter, 23–24
Aerodynamic heating, 35
  Reentry, 35, 75
Aerodynamics
  Airflow discontinuity at speed of sound, 9
  Airflow, distinct regions, 9
  Airflow, explanation sought, 8
  Air friction barrier, 10
  Air friction, temperature, 49
  General characteristis, 47
  Heating, 4, 35, 49–50, 53, 55, 62, 75, 98
  High drag surfaces, 23
  Hot spots, 4
  Hypersonic flow, 10–11
  Irregular heat expansion, 4
  Lifting force, air, 20
  Mach number, origin, 9
  Measurements, aerodynamic, 30
  New knowledge and disciplines, 9
    Supersonic airflow region, 49
  Shock waves, 48–49, 56, 58, 66
    Hypersonic airflow region, 49
    Lifting effect loss, 49
    Multiple shock waves, 49, 58
    Subsonic airflow region, 49
    Transonic airflow region, 49
  Structural properties and air, interplay, 4
  Structural stiffening, 41
Aerodynamics—continued
  Temperature predictions, structures, 56
  See also Flight dynamics, Hypersonic structure, Hypersonic flight, Reentry
Aeroelastic problems, 61–63, 65–68
Aeromedical Laboratory, Air Force Aeronautical Systems Division, 89
Aeromedical problems, 88–89
Aeronautical Systems Division, Air Force, 17, 78
Aerothermoelastic problems, 61–65, 68
Aid of early X–15 studies by pilots, 84
Air-conditioning unit, X–15, 30
Air Defense Command, 88
Air Force, U.S.
  Aeronautical Systems Division, 17, 78
    Aeromedical Laboratory, 89
    Flight Control Laboratory, 78
  Air Defense Command, 88
  Air Force-Navy-NACA research-airplane program, 14–15, 17
  Edwards Air Force Base, flight simulator, 38
  Flight Test Center, 33
    Bioastronautics Branch, 89
  Joint USAF–NASA facilities, 43
  Memorandum of Understanding, vi, 14
  Pilots for X–15 program, 84
  Research facilities, early work, 33
  Research proposal received, vi
  School of Aviation Medicine, 89
  System Command, 17
  Wright Air Development Center, 17
  Wright–Patterson Air Force Base, 89

Air Force–Navy–NACA research–airplane program, 14, 17
Air Force pilots for X–15 program, 84
Air friction barrier, 10
Air friction, temperature, 49
Air particle heating, 53
Airborne emergency teams, 43
Aircraft behavior measurements
  Attack and yaw–angle sensor, 44
  Inertial–reference system, 44
  Pressure rake, 57
  Pressure tubes, 62
  Research, 44
  Sketches, 55
Aircraft control tests, F–104 fighter, 75
Aircraft industry, U.S., research benefits, 14
Airflow
  Discontinuity at speed of sound, 9
  Distinct regions, 9
  Explanation sought, 8
Airplane reponse, reentry, 69
Alteration of structure stresses, 59
Altitude, piloted flight, 2
Aluminum
  Aircraft structures, 21
  Comparison with Inconel X, 12, 20
Ambient atmospheric pressure, 47
Ames Aeronautical Laboratory, 12
Ames Research Center
  Centrifuges, 40
  Wind tunnels, 52
Analytical techniques, 50
Anhydrous ammonia fuel, 3, 29
Apollo project, 97
Approach–and–landing maneuver, 80
Armstrong, N. A., pilot, 84–85
Astronomical equipment, 99
Atmospheric studies, 96
Attack and yaw-angle sensor, aircraft behavior messurements, 44
Automatic damping, electronics, 75
Automatic stability-augmentation requirement, 76–77
Automatic stabilization, self-adaptive control system, 79
Auxiliary power requirements, X–15, 29
Aviation Medical Acceleration Laboratory, 39

B

Backup instrument display emphasis, X–15, 86
Basic building problem, North American Aviation, Inc., 18
Beatty, Nevada, radar station, 42
Bell Aerospace Corp., 11
Bell Aircraft Corp., 11
Bikle, Paul F., director NASA Flight Research Center, iii, iv
Bioastronautics Branch, Air Force Flight Test Center, 89
Braking forces proved, reentry, 6
Buckling, local structure, 65–66
B–52 aircraft
  Captive tests, 66
  Comparison with other procedures, iv
  Crew safety, 27
  Launch-airplane operation, 19, 33 41, 42–44, 89, 97
  Replenishing fuel for X–15, 29

C

Canopy glass cracking, 66–67
Capacity, fuel tanks, 29
Captive tests, B–52, 66
Cardiovascular dynamics monitoring, 89
Centrifuge gondola, 39–40
Centrifuges, Ames Research Center, 40
Centrifuges, Manned Spaceraft Center, 40
Cermet skids, 95
Change in flight operations, 41
Changes in airflow, 47
Changing research program, 95
Characteristics, hypersonic flight, 47
Chase planes, 43
Check-out procedures, self-adaptive control system, 79
Chief research pilot, Flight Research Center, J. A. Walker, 84
Chronology of planning, NACA, vi
Closed loop program, 40
Command post, flight, 43
Computer drives centrifuge gondola, 39–40

Communications network, 43
Configuration
  Efficiencies, 49–50
  Problems, X–15, 12
  X–15, original, 3
Contract award, XLR-99 rocket engine, vi
Contribution of X–15 program to flight simulation, 5
Control
  Response electronic network, 79
  Sensitivity, pilot's 76
  System, new, 72
  System, X–15, 5, 21–25
  Tasks, pilot's, 71
Controls, X–15, electronic, 25
Cooling, new concept, 68
Coordination and control function, Flight Research Center, 43
Corridor, aerodynamic flight, 7
Corrugations in wing, 64
Crew safety, B–52, 27
Crossfield, A. S., pilot, 84–85
C–130 cargo airplane, 43
Cryogenics, 29

D

Data analysis of flights, 45
Data-reduction, flight data, 35
David C. Clark Co., pressure suit developer, 86
da Vinci, Leonardo, 1
Delay on delivery, XLR–99 rocket engine, 34
Department of Defense, 14
Design
  Balance, hypersonic structure, 60–61
  Competition winner, North American Aviation, Inc., 17
  Compromises, X–15 program, 18–19, 22, 24, 44–45, 49, 72
  Goal probes, 35–36
  Goals, X–15 program, 18, 36, 69
  Philosophy, XLR–99 rocket engine, 28
Detachable wingtips, research, 95
Directional flight stability problems, 51–52
Directional stability lack, X–2 rocket airplane, 33
Director, Flight Research Center, Paul F. Bikle, iv
Drag, F–104, 23–24
Drag measurements discrepancy, 53
Dual redundancy, self-adaptive control system, 79
Dualization in critical components, X–15, 29
Duplication of X–15 characteristics, F–100C airplane, 77
Dynamic air pressure, 47
D–558–I research program, 33
D–558–II rocket airplane, 28
  Mach 2 flight, first, 14

E

Early design plans, NACA, 13–15
Early program plans, Flight Research Center, 13
Early research objectives, iii
Edwards Air Force Base, flight simulator, 38
Ejection seat, 26
Elasticity, Inconel X, 64
Elasticity of air, 49
Electronics
  Automatic damping, 75
  Computer drives centrifuge gondola, 39
  Control response network, 79
  Controls, X–15, electronic, 25
  Data analysis of flights, 45
  Fail-safe electronic aids, 72
  Necessary aid for control, 5, 73–74
  Systems interplay analysis, 92
  See also Communications network
Ely, Nevada, radar station, 42–43
Emergency
  Ground support, 43
  Landing sites, 42
  Procedures studied by flight simulation, 42–43
Engine, XLR–99, *see* XLR–99 rocket engine
Engine, X–15, *see* XLR-99 rocket engine
Engle, J. H. Capt., pilot, 84–85

Escape capability, pressure suit, 26
Executive committee, NACA, vi
Expansion slots, 65
Exploration, X–15 design for, 13
External fuel tanks, research, 96, 98
Extra test equipment, research, 98

F

Facilities use, North American Aviation, Inc., 33
Fail-safe
  Considerations, X–15, 25, 74
  Electronic aids, 72
  Ground tests, 90
Flight control, 10
Flight Control Laboratory, Air Force Aeronautical Systems Division, 17 78
Flight controller, 43
Flight dynamics
  Approach-and-landing maneuver, 80
    Rates of descent, 80
  Automatic stability-augmentation requirement, 76–77
  Control system, new, 72
  Crucial reentry, 71
  Jet reaction fuel consumption, 75
  Mathematical model of pilot, 72
  Nonlinear airflow conditions, 71
  Roll-damper system, 73–74, 77
  Self-adaptive control system, 78–80
    Automatic stabilization, 79
    Check-out procedures, 79
    Dual redundancy, 79
    Gain-changer, 79
    Integration of controls, 79
    Reliability, 79
  Stability-control compromise, 72–73
  Tail modification, 72
  Trajectory control techniques, 74
  Vertical-tail size, 22, 72
  See also Aerodynamics, Hypersonic flight, Hypersonic structure, Reentry
Flight ground tracks, 42
Flight maneuvers, flight simulator , 50
Flight operations, 33
  Airborne emergency teams, 43
  Change in flight operations, 41
Flight operations—Continued
  Chase planes, 43
  Command post, flight, 43
  Data-reduction, flight data, 35
  Design goal probes, 35–36
  Emergency ground support, 43
  Emergency landing sites, 42
  Fail-safe ground tests, 90
  Flight controller, 43
  Flight ground tracks, 42
  Flight planning, 35
  Flight preparations, 1956, 33
  Flight-plan variation practice, 37
  Flights, 1960–62, 35
  Frustrating operation period, 34
  Malfunctions, 34–35, 41, 43, 79, 90–92
  Margin of safety criteria, 35, 38
  Modifications, 35
  Preflight analysis, 34
  Safety record, 45
  Stability-and-control problem, 35
  Structural temperatures, 35–36
  Telemetry signal monitors, 43
  See also Electronics
Flight operations preparation, NACA, 33
Flight planning, 35
Flight preparations, 1956, 33
Flight-plan variation practice, 37
Flight Research Center
  Chief research pilot, J. A. Walker, 84
  Coordination and control function, 43
  Director, Paul F. Bikle, iv
  Early program plans, 13
Flight simulator
  Centrifuge gondola, 39–40
    Computer drive, 39–40
  Contribution of X–15 program, 5
  Emergency procedures studied, 42–43
  Flight maneuvers, 50
  History of simulators, 37–40
  Research tool, 36
  Roll-yaw coupling, 76–77
  Training use, 37–39
  Trajectory control techniques, 74–75
Flight Test Center, Air Force, 33

Flights, 1960–62, 35
Flutter problem, structure, 61–62, 66–68
Flying time accumulated, X–15, 2
Frustrating operation period, 34
Fuel tanks for X–15, B–52, 29
Fuel tanks, XLR–99 rocket engine, 29
Fuel, XLR–99 rocket engine, 3, 27–29, 41
Fuselage
  Damage, X–15, 2
  Design, X–15, 19
  Lift effects, 50–51
F–100C airplane
  Duplication of X–15 charateristics, 77
  Landing techiques study, 81
F–104 fighter
  Aerodynamic drag, 23–24
  Aircraft control tests, 75
  Landing techniques, 40, 81
F–107 experimental aircraft, 40

G

G forces, high, 39–40, 84
Gain-charger, self-adaptive control system, 79
Gaseous helium, 29
Gaseous nitrogen, 29
Gemini project, X–15 suit, 88

H

Heart analysis, pilots, 89
Heat analysis in flight, 53
Heat exchanger performance, 95
Heat-sink
  Concept, 68
  Inconel X, 12
  Structure, 12, 35, 60
Heat transfer, 22, 53–58, 60, 65, 68
Heating, 4, 19, 20, 35, 49–50, 53, 55, 62–64, 98
Hidden changes, X–15, 2
High-altitude experiments, 97
High drag surfaces, 23
High heat input regions, structure, 60
High Speed Flight Station, 12–13, 33
High structure stress levels of design, 59–60
History of flight simulation, 37–40
Horizon determination, research, 97
Horizon-scanner, infrared, research, 100
Horizontal tail airflow, 52
Hot spots, 4
Hot structural concept, 20
Hydrogen peroxide
  In control system, 26, 29
  Tank explosion, 34
Hypersonic
  Aircraft future, 6
  Airflow region, 49
  Airplane, X–15, first, 9
Hypersonic flight
  Aerodynamic heating, 35
  Characteristics, hypersonic flight, 47
    Air particle heating, 53
    Ambient atmospheric pressure, 47
    Analytical techniques, 50
    Changes in airflow, 47
    Configuration effciencies, 49–50
    Directional stability problems, 51–52
    Drag measurements discrepancy, 53
    Dynamic pressure, 47
    Elasticity of air, 49
    Fuselage lift effects, 50–51
    Heat analysis in flight, 53
    Heat transfer, 22, 53–58, 60, 65, 68
    Horizontal tail airflow, 52
    Interference effects, 52
    Knowledge gaps, 50
    Theory confirmations, 50–52
    Turbulence point problem, 56
    Viscosity of air problems, 54–56, 63
    Wing importance reduced, 50
  Flight control, 10
  Heat sink structure, 12, 35, 60
  Hot structural concept, 20
  Hypersonic aircraft future, 6
  Thermal barrier, 10, 12
  See also Aerodynamics, Flight dynamics, Hypersonic structure, Reentry

Hypersonic flow, 10–11
Hypersonic structure
  Aeroelastic problems, 61–63, 65–68
  Aerothermoelastic problems, 61–65, 68
  Alteration of stresses, 59
  Buckling, local, 65–66
  Canopy glass cracking, 66–67
  Corrugations in wing, 64
  Design balance, 60–61
  Flutter problem, 61–62, 66–68
    Skin panel flutter, 66–67
  Heat-sink concept, 68
  High heat input regions, 60
  High stress levels of design, 59–60
  Landing gear stress, 22, 68
  Previous technology comparison, 63
  Scars, structural, 59
  Stiffening modifications, 67
  Structural design limits, 76
  Tail structure, 64
  Temperature and strength, 60
  Thin skin problems, 66
  Turbulent flow, 65–66
  Wing structure, 63–64
  See also Aerodynamics, Flight dynamics, Hypersonic flight, Reentry

I

Igniter system, XLR–99 rocket engine, 28
Importance of pilot, iv, 81, 83–84, 92
Improvement and development program, 30, 45, 88
Improvement and updating, pressure suit, 88
Inconel X
  Elasticity, 64
  Heat-sink concept, 12
  Material properties, 29
  Maximum temperatures, 66
  Production of, 21
  Stiffness, 62
  Strength and heat, 60
  Weight, 20
Inertial-reference system, aircraft behavior measurements, 44
Infrared horizon scanner, 100
Instrument
  Alighment in flight, research, 99
  Calibrations, post-flight, 98
  Display, X–15, 85–86
Instrumentation, aircraft behavior, sketches, 55, 85–86, 98–99
Integration of controls, self-adaptive control system, 79
Interference effects, 52
International Nickel Co., Inconel X developer, 12
Irregular heat expansion, 4

J

Jet controls, Mercury capsule, 26
Jet Propulsion Laboratory, 52
Jet reaction fuel consumption, 75
Joint facilities, USAF–NASA, 43
Joint research program, Air Force-Navy-NACA, 14–15, 17
Joint USAF-NASA facilities, 43

K

Kincheloe, I. C., Capt., pilot, 84
Knowledge gaps, airflow, 50

L

Landing
  Errors by pilots nil, 80–81
  Gear arrangement, X–15, 21
  Gear stress, 22, 68
  Techniques, F–104 fighter, 40, 81
  Techniques, pilots, 5
  Techniques study, F–100C airplane, 81
Langley Aeronautical Laboratory, 12–13
Langley guidelines, 13
Langley Research Center, 52
Launch-airplane operation, B–52, 19, 33, 41, 42–44, 89, 97
Leonardo da Vinci, 1
Lifting effect loss, shock waves, 49
Lifting force, air, 20
Lindbergh, Charles, Atlantic flight, 60

Link trainer, 37
Liquefied nitrogen, 29
Los Angeles Division, North American Aviation, Inc., 17
Lox fuel, 3, 29

M

Mach, Ernst, physicist, 9
Mach number, origin, 9
Mach number, ratio, 9
Mach 1 flight, first, X–1, rocket airplane, 33
Mach 2 flight, first, D–558–1 rocket airplane, 14
Mach 3 flight, first, X–2, rocket airplane, 14–15
Mach 6.6, original goal, 18
Mach 8 capability, 96, 98, 101
Mach 8 heat problems, 98–99
Mach 8 proposal, North American Aviation, Inc., 98
Mach 10 aircraft, development, 95
Mach 10 flight, 10, 56, 95
Malfunctions, XLR–99 rocket engine, 43
Malfunctions, X–15, 28, 34–35, 41, 43 79, 90-92
Manned space flight, Mercury project contribution, 6
Manned Spacecraft Center, centrifuges, 40
Margin of safety criteria, 35, 38
Massachusetts Institute of Technology wind tunnel, 52
Material properties, Inconel X, 29
Mathematical model of pilot, 72, 89–90
Maximum temperatures, Inconel X, 66
McKay, J. B., pilot, 84–85, 91, 92, 96, 98
Measurements, aerodynamic, 30
Medical problems, 88–89
Memoradum of Understanding, vi 14
Mercury-capsule jet controls, 26
Mercury Project, iii–iv
  Contribution to future manned space flight, 6
  Mercury-capsule jet controls, 26
  Pressure suit, 88
Micrometeorite particle collection, 97
Minneapolis-Honeywell Corp., adaptive control system design, 79
Modifications, flight operations, 35
Modifications, X–15 instrument display, 86
Multiple shock waves, 49, 58

N

NACA, *see* National Advisory Committee for Aeronautics
NADC, *see* Naval Air Development Center
Names of pilots, *see* Pilots
NASA, *see* National Aeronautics and Space Administration
National Advisory Committee for Aeronautics
  Air Force-Navy-NACA research-airplane program, 14, 17
  Chronology of planning, vi
  Crossfield, A. S, former NACA pilot, 84
  Early design plans, 13–15
  Executive committee, vi
  Flight operations preparations, 33
  Nucleus of NASA, 11
  Research Airplane Projects, vi
  Research background, 11
  Speed brakes proposal, 23
National Aeronautics and Space Administration
  NACA, nucleus of NASA, 11
  Joint USAF-NASA facilities, 43
  Pilot selection, NASA, 84
  See also National Advisory Committee for Aeronautics
National prestige, 8
Navy, U.S.
  Air Force-Navy-NACA research-airplane program, 14, 17
  Aviation Medical Acceleration Laboratory, 39–40
  Centrifuge aid, 39
  Memoradum of Understanding, 14
  Naval Air Development Center, 39–40
  Pilot selection, X–15 program, Navy Cmdr. F. S. Petersen, 84

Navy, U.S.—Continued
Research proposals received, vi
Support for X–15 program, 14–15
Necessary aid for control, electronics, 5, 73–74
New knowledge and disciplines, 9
Newton, Sir Isaac, 1, 2
Nickel-chrome alloy, new *see* Inconel X
Nonlinear airflow conditions, 71
North American Aviation, Inc.
Basic building problem, 18
Design competition winner, 17
Facilities use, 33
Los Angeles Division, 17
Mach 8 proposal, 98
Pilot selection, A. S. Crossfield, 84
Role in initial phases, 34
Weight-saving titanium use, 21
Nose gear, 21, 68, 92

O

Optimization, X–15 program, 19, 49
Oxygen, liquefied, fuel, 3, 29

P

Performance capability, X–15, 33
Petersen, F. S., Cmdr., pilot, 84–85
Phases, X–15 program, 3–4
Pilots
Adaptive control acceptance, 79, 81
Aeromedical problems, 88–89
Cardiovascular dynamics monitoring, 89
Heart analysis, 89
Psychic and physical stresses, 89
Psychomotor performance, 89
Aided early X–15 studies, 84
Altitude, piloted flight, 2
Control sensitivity, 76
Conrol tasks, 71
Ejection seat, 26
G forces, high, 39–40, 84
Importance of pilot, iv, 81, 83–84, 92
Landing errors nil, 80–81
Landing techniques, 5
Pilots—Contiued
Mathematical model of pilot, 72, 89–90
Pilot names, 84
Armstrong, N. A., 84–85
Crossfield, A. S., 84–85
Engle, J. H., Capt., 84–85
Kincheloe, I. C., Capt., 84
McKay, J. B., 84–85, 91, 92, 96, 98
Petersen, F. S., Cmdr., 84–85
Rushworth, R. A., Maj., 84–85
Thompson, M. O., 84–85
Walker, J. A., 38, 84–85, 87
White, R. M., Lt. Col., 84–85
Protection of pilots, 26–27, 35
Reliability of pilots, 5–6, 10, 69, 90 92
Selection of pilots, 84
Suggestions for program, 84
Training of pilots, 84
Special jet aircraft, 40
Windblast, 26
See also Pressure suit
Pilot wear, pressure suit, 87
Piloted reentry practical, 80
Pioneer project, 95
Pitch control, X–15, 23, 25–26
Pods, micrometeorite collection, 97
Policy
Langley guidelines, 13
Memorandum of Understanding, vi, 14
National prestige, 8
Role, X–15 program, 1, 6
Power steering, 24
Preflight analysis, 34
Pressure rake, aircraft behavior measurements, 57
Pressure suit
David C. Clarke Co., developer, 86
Escape capability, 26
Improvement and updating, 88
Mercury project, 88
Pilot wear, 87
Pressure tubes, aircraft behavior measurements, 62
Previous technology comparison, hypersonic structure, 63

Problem studies, X–15 program, March, 1954, 12
Production of Inconel X, 21
Program, *see* X–15 program
Propulsion-systems tests, research, 99, 101
Protection of pilots, 26–27, 35
Pseudo-guidance systems, X–15, 86
Psychic and physical stresses, pilots, 89
Psychomotor performance, pilots, 89
Pullout requirements, reentry, 22–23

R

Radar station, Beatty, Nevada, 42
Radar station, Ely, Nevada, 42–43
Radiation cooling, 68
Radiation measurements, 98
Rates of descent, X–15, 80
Reaction jets, X–15, 25–26, 29, 40, 74–75
Reaction Motors, Inc., rocket engine developer, vi, 28
Reentry
  Aerodynamic heating, 35, 75
  Airplane response, 69
  Braking forces proved, 6
  Flight dynamics crucial, 71
  Pullout requirements, 22–23
  Simulated reentry, 37, 40
  Speed brakes, 23, 52, 77
  Suborbital approximation, 10
  See also Aerodynamics, Flight dynamics, Hypersonic flight, Hypersonic structure
Reliability
  Pilots, 5–6, 10, 69, 90, 92
  Record, X–15 program, 90
  Self-adaptive control system, 79
  XLR–99 rocket engine, 28–29
Research
  Bakcground, NACA, 11
  Facilities, early works, 33
  Instrument system, X–15, 30–31
  Objectives reached, X–15 program, 83
  Proposal received by Air Force, vi
  Tool, flight simulator, 36
  Workhorse, X–15, 8, 95
Research, aircraft behavior measurements, 44
Research airplane projects, NACA, vi
Research areas
  Ablative materials, 96, 98
  Astronomical equipment, 99
  Atmospheric studies, 96
  Cermet skids, 95
  Changing research program, 95
  Detachable wingtips, 95
  Early research objectives, iii
  External fuel tanks, 96, 98
  Extra test equipment, 98
  Heat exchanger performance, 95
  High-altitude experiments, 97
  Horizon determination, 97
  Horizon-scanner, infrared, 100
  Instruments
    Aligment in flight, 99
    Calibrations, post-flight, 98
  Mach 8 capability, 96, 98, 101
  Mach 8 heat problems, 98–99
  Mach 10 flight, 10, 56, 95
  Micrometeorite particle collection, 97
  Propulsion-systems test, 99,101
  Radiation measurements, 98
  Satellite-related research, 93
  Sensors, research, 55
  Sky brightness measurements, 97
  Supersonic decelerator, 95
RMI XLR–11 rocket engine, 34
Rocket engine needs, X–15, 12, 27–28
Rogers Dry Lake, 41
Role, North American Aviation, Inc., in initial phases, 34
Role, X–15, program, 1, 6
Roll control, X–15, 23, 25–26
Roll-damper control system, 73-74,77
Roll-yaw coupling, flight simulator, 76–77
Rubber tire protection, 21
Rushworth, R. A., Maj., pilot, 84–85

S

Safety record, operations, 45
Satellite-related research, 93
Scars, structural, 59

School of Aviation Medicine, Air Force, 89
Selection of pilots, 84
Self-adaptive control system, 78–80
Sensors, research, 55
Shock waves, 48–49, 56, 58, 66
Simulated reentry, 37, 40
Skin panel flutter, 66–67
Skis, landing gear, 21, 68
Sky brightness measurements, 97
Soulé, H. A., NACA research-airplane program director, 13
Space ferries, 6, 80
Special jet aircraft training, 40
Speed brakes proposal, NACA, 23
Speed brakes, reentry, 23, 52, 77
Spirit of St. Louis, 60
Stability and control problem, X–15, 12, 25, 72
Static-test techniques, X–15, 21
Stiffening modifications, hypersonic structure, 67
Stiffness, Inconel X, 62
Strength and heat, 60
Structural
  Design limits, 76
  Properties and air, interplay, 4
  Stiffening, 41
  Temperatures, 35–36
Suborbital approximation, reentry, 10
Subsonic airflow region, 49
Subsystem fuels, X–15, 29
Successor to X–15 not in sight, 99, 101
Suggestions for program by pilots, 84
Supersonic
  Airflow region, 49
  Decelerator, 95
  Transports, 95
Systems Command, Air Force, 17
Systems interplay analysis, electronic, 92

T

Tail
  Modification, 72
  Structure, 64
  Surface changes, X–15, 5
  Surfaces, X–15, 21–23
Tanks, fuel, 3, 19, 29, 96
Telemetry signal monitors, 43
Temperature and strength, structure, 60
Temperature predictions, structures, 56
Temperatures, structural, 35–36
Theory confirmations, hypersonic flow, 50–52
Theory errors, X–15 program, 4
Thermal barrier, 10, 12
Thin skin problems, 66
Thiokol Chemical Corp., *see* Reaction Motors, Inc.
Thompson, M.O., pilot, 84–85
Three control sticks, 25
Three-year schedule, X–15 program, 13, 18
Titanium, 21, 64
Training of pilots, 38, 45
Training use, flight simulator, 37–39
Trajectory control techniques, 74–75
Transonic airflow region, 49
Turbine, stream, X–15, 29
Turbulence point problem, 56
Turbulent flow, 65–66
Two-stage vehicle, XLR–99 rocket engine, 41
T–33 trainer, side controller evaluation, 40

U

Understanding, Memorandum of, vi, 14
Unknown barriers, X–15 program, 6–7

V

Vanguard project, 95
Vertical-tail size, 22, 72
Viscosity of air problems, 54–56, 63

W

Walker, J. A, pilot, 38, 84–85, 87
Weight, Inconel X, 20

Weight, research-instrument system, X–15, 30–31
Weight-saving titanium use, North American Aviation, Inc., 21
Wendover, Utah, communications network limit, 4–3
White, R.M., Lt. Col., pilot, 84–85
Wind tunnels, Ames Research Center, 52
Wind-tunnel tests, 11, 48, 50, 52–53 62–63, 67
Windblast, 26
Wing importance reduced, airflow, 50
Wing structure, 63–64
Woods, Robert J., manned space flight supporter, 11
Wright Air Development Center, Air Force, 17
Wright brothers, iii, 1, 8, 71, 73
Wright Flyer, 71, 83
Wright-Patterson Air Force Base, 89

X

XLR–99 rocket engine
  Basic requirement, 12
  Contract award, vi
  Delay on delivery, 34
  Design philosophy, 28
  Engine characteristics, 27, 29
  Engine monitor, 28
  Fuel, 3, 27–29, 41
  Fuel tanks, 29
  Igniter system, 28
  Malfunctions, 43
  Reaction Motors, Inc., rocket engine developer, vi, 28
  Reliability, 28–29
  Two-stage vehicle, 41
  See also X–15 airplane
X–1 rocket airplane, 33
  Mach 1 flight, first, 14–15
  Reaction Motors, Inc., builder, 28
X–1A rocket airplane, 51
X–1B rocket airplane, 75
X–2 rocket airplane, 33
  Directional stability lack, 51
  Mach 3 flight, first,14–15
X–15 airplane
  Air-conditioning unit, 30
  Auxiliary-power requirements, 29
  Configuration, original, 3
  Configuration problems, 12
  Control system, 21–25
    Changes, 5
    Pitch control, 23, 25–26
    Reaction jets, 25-26, 29, 40, 74–75
    Roll control, 23, 25–26
  Dualization in critical components, 29
  Exploration, design for, 13
  Fail-safe considerations, 25, 74
  Flying time accumulated, 2
  Fuselage damage, 2
  Fuselage design, 19
  Hidden changes, 2
  Hypersonic airplane, first, 9
  Instrument display, 85–86
    Backup display emphasis, 86
    Modifications, 86
    Pseudo-guidance systems, 86
  Landing-gear arrangement, 21
  Performance capability, 33
  Research-instrument system, 30-31
    Weight, 30
  Research workhorse, 8, 95
  Rocket engine needs, 12, 27–28
  Stability and control problem, 12
  Static-test techniques, 21
  Subsystem fuels, 29
  Tail surfaces, 21–23
  Tail-surface changes, 5
  Turbine, steam, 29
  See also XLR–99 rocket engine, X–15 program
X-15 program
  Design compromises, 18–19, 22, 24, 44–45, 49, 72
  Design goals, 18, 36, 69
  Improvement and development program, 30, 45, 88
    Malfunctions, 34–35, 41, 43, 79 90–92
    Optimization, 19, 49

X-15 program—Continued
Phases, 3-4
Problem studies, March, 1954, 12
Reliability record, 90
Research objectives reached, 83
Successor not in sight, 99, 101
Theory errors, 4
X-15 program—Continued
Three-year schedule, 13, 18
Unknown barriers, 6-7
Wind-tunnel tests, 11, 48, 50, 52-53, 62-63, 67
See also Policy, X-15 aircraft
X-15-2 aircraft, 95, 96, 98-99

* U.S. GOVERNMENT PRINTING OFFICE : 1965 O—783-510