NASA Technical Memorandum 88268

Rapid Prototyping Facility for Flight Research in Artificial-Intelligence-Based Flight Systems Concepts

Eugene L. Duke, Victoria A. Regenie, and Dwain A. Deets

October 1986

NASA
National Aeronautics and
Space Administration

NASA Technical Memorandum 88268

Rapid Prototyping Facility for Flight Research in Artificial-Intelligence-Based Flight Systems Concepts

Eugene L. Duke, Victoria A. Regenie, and Dwain A. Deets
Ames Research Center, Dryden Flight Research Facility, Edwards, California

1986

National Aeronautics and
Space Administration
Ames Research Center
Dryden Flight Research Facility
Edwards, California 93523-5000

SUMMARY

The Dryden Flight Research Facility of the NASA Ames Research Center is developing a rapid prototyping facility for flight research in flight systems concepts that are based on artificial intelligence (AI). The facility will include real-time high-fidelity aircraft simulators, conventional and symbolic processors, and a high-performance research aircraft specially modified to accept commands from the ground-based AI computers. This facility is being developed as part of the NASA-DARPA automated wingman program. This document discusses the need for flight research and for a national flight research facility for the rapid prototyping of AI-based avionics systems and the NASA response to those needs.

NOMENCLATURE

AI	artificial intelligence
AW	automated wingman
CPU	central processing unit
DARPA	Defense Advanced Research Projects Agency
DDI	digital display indicator
DFBW	digital fly-by-wire
DFCS	digital flight control system
FCS	flight control system
HiMAT	highly maneuverable aircraft technology
HSD	horizontal situation display
HUD	head-up display
I/O	input-output
KBES	knowledge-based expert system
MIL-SPEC	military specification
MIL-STD	military standard
MUX	multiplexer
OPTRE	Optimal Trajectory Research Experiment
PCM	pulse-code modulated

RAV	remotely augmented vehicle
RF	radiofrequency
RPRV	remotely piloted research vehicle
UHF	ultrahigh frequency

INTRODUCTION

The Dryden Flight Research Facility of NASA Ames Research Center (Ames-Dryden) is developing a rapid prototyping facility for flight research in flight systems concepts that are based on artificial intelligence (AI). The facility will include real-time high-fidelity aircraft simulators, conventional and symbolic processors, and a high-performance research aircraft specially modified to accept commands from the ground-based AI computers. This facility is being developed as part of the automated wingman program by NASA and the Defense Advanced Research Projects Agency (DARPA). This document discusses the need for flight research and for a national flight research facility for the rapid prototyping of AI-based avionics systems and the NASA response to those needs.

The development of a knowledge-based expert system (KBES) generally includes the implementation of a prototype system as an early step (ref. 1). This prototype KBES is a means of assessing concept feasibility and preliminary rules, examining knowledge representation, and providing a mechanism for selling a larger, more detailed program. A KBES is often implemented using general-purpose expert system building tools that allow rapid deployment of a prototype system. Although much of the envisioned final system is simulated, the prototype system is sufficiently realistic (usually in the form of a rudimentary knowledge base) to enable both overall concept assessment and initial "rule" validation.

The value of implementing a prototype system early in the development of a KBES is that many problems can be discovered and solved even before the first real design iteration is initiated. By addressing these problems (or potential problems) early in the development cycle, one can often avoid many of the more costly and time-consuming exercises associated with the late introduction of design changes and software modifications.

In reference 2, the issues of support software for applied AI research, knowledge acquisition, and knowledge representation are presented as major problems that occur because "we are now witnessing the first transition of expert programs from the comfortable surroundings of research laboratories to the more demanding outside world." The world outside the research laboratory will cause many other problems to surface. Early entry into simulators and flight research will minimize the effects of these real-world problems on the schedule, operation, and deployment of KBESs embedded into avionics systems.

The application of KBESs to aircraft problems will require both man-machine as well as machine-machine interfaces. The avionics environment is noisy and far more complex than any application area thus far addressed in applied AI. The inclusion

of KBESs within the aircraft system will almost certainly involve control functions. All of these issues have the potential for greatly increasing the problems of implementing AI-based avionics systems.

The need for rapid prototyping has been recognized in applied AI although the major well-known systems were applied in relatively benign and forgiving environments: DENDRAL (ref. 3) is used by research chemists, PROSPECTOR (ref. 4) is used by geologists and mining engineers, and MYCIN (ref. 5) appears to be used primarily in AI research laboratories. Although there were problems in developing the man-machine interface for these systems, many of the problems facing the systems designer of AI-based avionics systems were avoided. By having relatively sophisticated users, many limitations of the listed systems are protected against or go unnoticed. The laboratory environment is typically clean and uncontaminated by noise; by requiring a human to act as an agent of the system, these KBESs are protected from obviously erroneous instructions. The machine-machine interface may prove much more difficult and certainly less forgiving.

The thesis of this document is that, because of the problems associated with KBESs embedded within an aircraft avionics system, a rapid prototyping facility for AI-based flight systems concepts is needed.

The system described in this document is intended as an adjunct to the usual avionics development process that goes from research and development laboratories to simulators of increasing complexity and, occasionally, an expensive and often one-of-a-kind, single-purpose flight demonstrator vehicle. The rapid prototyping flight systems research facility described here is, in a sense, simply an extension of the more elaborate high-fidelity simulators. However, this facility is more realistically viewed as a bridge between simulation and demonstrator development.

The rapid prototyping flight research facility for AI-based flight systems concepts will provide a flexible, general-purpose capability for the early solution of problems certain to be discovered in future development programs. Additionally, the use of this facility will provide the benefits of flight research described in reference 6:

1. Separating real from imagined problems.

2. Uncovering the unexpected and overlooked.

3. Forcing realistic integration of the pilot.

4. Forcing development of credible prediction, test, and qualification processes.

5. Requiring every anomaly to be addressed.

6. Forcing timely technology transfer, and building a core techincal team.

These issues are not insubstantial. Flight research forces one to focus on real problems that are often inconceivable in a simulation environment. This is particularly true with new concepts such as AI-based flight systems for which there is little applications experience. Without flight research in AI-based flight sys-

tems, many of the wrong issues will be addressed, and many of the right problems will be overlooked.

Two serious issues related to the incorporation of AI-based technology in aircraft must be dealt with for flight research to occur: pilot-vehicle integration and system qualification. These issues are unlikely to be viewed in the proper perspective without the focus of a flight program. Flight research will allow real problems to be solved and real solutions to be found and disseminated. Within this perspective, NASA has undertaken the development of a facility for flight research in AI-based flight systems concepts.

BACKGROUND

The need for a rapid prototyping flight research facility has long been recognized by NASA. At Ames-Dryden, this concept evolved from experience with remotely piloted research vehicles (RPRVs) (ref. 7 to 9), and from experience with digital flight control systems on vehicles such as the three-eighths scale F-15 RPRV (ref. 8) and the F-8 digital fly-by-wire (DFBW) aircraft (refs. 10 and 11). This rapid prototyping flight research facility, known as the remotely augmented vehicle (RAV) facility, has been used to test control law concepts on the F-8 DFBW aircraft (refs. 11 to 13). Other uses included implementing the primary control system for RPRVs such as the three-eighths scale F-15 and the highly maneuverable aircraft technology (HiMAT) vehicle (ref. 14) and providing a remote computation facility for cockpit displays (ref. 15). As explained in reference 12, the RAV concept was developed to aid in testing advanced or multiple alternate control law algorithms without the expensive and time-consuming process of repeated aircraft system modifications.

An Example RAV System

An example of the RAV concept, the F-8 DFBW/RAV flight system, is shown in figure 1 (ref. 12). This system involves the highly instrumented F-8 DFBW research aircraft, a receiver for downlink telemetry, a transmitter for uplink telemetry, and a ground-based digital computer for control law computation. The ground-based computer receives pilot imputs and aircraft response parameters from the downlink telemetry. The control law algorithms, programmed in FORTRAN in the ground-based computer, are executed, and the resulting command outputs are uplinked to the aircraft. The uplinked commands are then interfaced to the onboard control system as required.

The F-8 DFBW/RAV flight system is supported by the F-8 iron-bird simulation shown in figure 2. The overall F-8 DFBW/RAV system configuration was developed, verified, and validated using the iron-bird sumulation. This ground simulation facility consists of a decommissioned F-8 aircraft and many elements of the DFBW flight system.

The iron-bird simulation can be operated using actual triplex flight control computers and triplex hydraulics. The surface positions are input to the nonlinear equations of motion and the F-8 aerodynamic model in the simulation computer. The simulation computer also controls both the cockpit instruments and the sensor inputs

to the flight control system. The RAV ground computers are used as elements of the total simulation, and the uplink and downlink hardware interfaces are simulated in the central computer. The ground and onboard software interfaces in the F-8 DFBW/RAV simulation are identical to those for the actual aircraft and ground facilities used in flight. The software developed and validated in the F-8 DFBW/RAV system simulator are used without modification during RAV flight operations.

The basic RAV facility was extended by using ground tracking radar and scenario simulations for the F-8 trajectory research experiment (OPTRE) program. The goal of this program was to demonstrate, in flight, a three-dimensional optimal interception algorithm. In preparation for flight research, two problems were immediately recognized: the lack of appropriate sensors on the F-8 aircraft and the need for repeatable data. To solve these problems, ground-based tracking radar and a synthetically generated target were used. The trajectory of the synthetic target was generated in the ground-based auxiliary computers in coordinates relative to the position of the F-8 aircraft. The ground-based radar was used to supplement the lack of inertial data from the F-8 system. Within the ground computers, relative position information from the synthetic target generator was fed into the interception algorithm. The synthetic target provided repeatable data and allowed the simulation of onboard radar; the tracking radar allowed the simulation of an inertial system.

Key Elements of RAV Concept

The several key elements of the RAV system concept include (fig. 3): a specially modified aircraft, an auxiliary computation facility, and a simulator. Each element serves a unique function that allows the rapid transition from simulation to flight. This rapid transition capability is the most powerful argument for a RAV system. Almost as soon as a flight systems concept can be demonstrated on a simulator, that concept can be flight-tested using a RAV facility.

The aircraft used in a RAV flight research facility requires two main modifications. The first modification is the addition of sensors and a high-quality data instrumentation system. The data collected by this system are transmitted to the auxiliary computational facility using the telemetry downlink. The other modification requires the installation and integration of an uplink receiver into the aircraft system. If closed-loop control is desired, the uplink is interfaced to the flight control system; if the uplink is used for display purposes, the interface is to the onboard display system. Both uplink functions may be incorporated simultaneously. The aircraft requires no further modification after the test aircraft has been configured with the instrumentation system, downlink transmitter, and uplink receiver incorporated in the system.

The auxiliary computational facility (fig. 4) consists of a downlink receiver, a suite of computers, and an uplink transmitter. The downlink telemetry is received and passed to the ground-based computers. These computers execute the calculations necessary to the task being performed and the output commands to be uplinked to the aircraft. Duplicates of these computers are included in the simulation facility. Figure 3 shows this conceptually. Because the computers used in the simulator and the flight system are identical, software developed in the simulator can be moved into the flight system easily and without modification.

The ground-basing of these auxiliary computers is not essential to the RAV concept, although ground-basing may offer significant advantages over the incorporation of an auxiliary computer onboard the aircraft. The main advantage of a ground-based system is that such a system need not include flight qualified, military specification (MIL-SPEC) computers. Laboratory quality computers can be used in the ground facility. The differences in these requirements allow state-of-the-art computers to be used in the ground-based flight systems. In fact, even breadboard computers could conceivably be used in the ground-based system. Another advantage of the ground-based auxiliary computational facility is that software changes do not require aircraft modifications. This latter advantage has payoffs in cost, schedule, and safety of flight.

The simulator is used for flight system development, verification, and validation. These simulators vary from simple software models of the vehicle aerodynamics and equations of motion to complex flight-hardware-in-the-loop systems, such as the F-8 DFBW/RAV and the HiMAT simulations (ref. 16). However, these simulators must include sufficient realism and flight hardware to allow the development of flight system concepts. By including flight systems hardware in the simulator, the simulator becomes a systems integration and software validation facility. The use of simulations in the validation of flight systems software (whether onboard or ground-based) is discussed in references 12 and 16 to 20.

EXTENSION OF RAV CONCEPT FOR RAPID PROTOTYPING OF AI-BASED FLIGHT SYSTEMS

An overview of the flight evaluation system to be used for the automated wingman (AW) program is shown in figure 5. This system is an extension of the RAV concept described above. The primary AW research aircraft (fig. 5) will be a highly instrumented F-18 aircraft equipped with a downlink transmitter and uplink receiver. Another instrumented F-18 aircraft equipped with telemetry downlink will be used as the lead aircraft. The lead aircraft will also have a two-way ultrahigh frequency (UHF) audio link with the RAV facility. A third F-18 aircraft will be used as a threat aircraft.

The ground-based RAV facility will receive downlink telemetry from both the AW and the lead F-18 aircraft. Space-positioning data on the location of the AW aircraft and either of the other aircraft will be provided to the RAV facility from tracking radar. The ground-based computational facility will be basically the same as that described in the section entitled An Example RAV System, except for the addition of symbolic processors and a voice input-output (I/O) unit.

The AW aircraft, the ground facility, and the simulation developed for the AW program will form the basis of the rapid prototyping flight research facility for AI-based flight systems concepts. This flight research facility is being developed as a national research facility avalilable to NASA, other governmental agencies, and industry for testing concepts and conducting flight research.

Description of the Research Aircraft

The F-18A aircraft (fig. 6) is a single-place supersonic fighter-attack aircraft powered by two turbofan engines with afterburner. The primary flight control system (FCS) is a digital quadruplex control augmentation system implemented by fly-by-wire techniques. The cockpit (fig. 7) contains two digital display indicators (DDIs), a head-up display (HUD), and a horizontal situation display (HSD). Also contained in the cockpit are the throttle control levers, the control stick, the rudder pedals, and numerous indicator and switch panels.

The uplink system (fig. 8) will interface with the FCS and will be capable of full-authority stick and pedal commands and throttle commands from idle to full military power. It will also be possible to send uplinked commands to the mission computers, using the military standard (MIL-STD-) 1553 bus. These mission computers will control the formats of the HUD, DDIs, and HSD. The instrumentation system will be interfaced to the MIL-STD-1553 bus and will provide parameters of interest on the downlink.

The research aircraft will become airborne and will be landed by a pilot who will also monitor the performance of the automatic system. In the event of any system malfunction, the pilot will be able to disconnect the automatic system and regain control of the aircraft using a quick-disconnect switch located on the control stick. This research aircraft will provide a flexible testbed for AI-based flight systems concepts in general and pilot vehicle integration in particular. The ability to modify the display formats (discussed in the Description of Simulation Facility section) will allow the investigation of intelligent man-machine communication.

Description of Ground Facility

The concept for the ground facility being developed for the AW program is shown in figure 9. The engineering units computer will convert the downlink data from pulse-code-modulated (PCM) counts to engineering units and the uplink commands from engineering units to PCM counts. The control law computer will be capable of executing control laws and safety checks. An auxiliary computer on the Ethernet will be used for scenario and advanced sensor simulation; a second auxiliary computer will be used primarily as a file server for the other computers on the Ethernet. Also on the Ethernet will be multiple symbolic processors for concurrent execution of AI programs. The voice I/O unit will provide the interface between the UHF radio link and one of the symbolic processors to accommodate experiments in speech communications for the man-machine interface. The computers on the Ethernet that are interfaced to the control law computer using the MIL-STD-1553 bus will be capable of being connected to the simulation facility described below.

Description of Simulation Facility

The simulation facility being developed for the AW program (fig. 10) is based on an F-18 cockpit using flight hardware for the HUD, DDIs, HSD, control stick, and throttle levers. The display devices will be controlled by an actual mission computer interfaced to the simulation computer by a MIL-STD-1553 bus that simulates

one of the avionics buses in the aircraft. The inclusion of the mission computer in the simulation facility will allow the development and qualification of advanced display formats for the flight research vehicle. Mission computer software qualified in the simulation facility will be loaded into the F-18 mission computers for flight test.

The simulation computer will be connected to the cockkpit by the MIL-STD-1553 bus and an analog interface. The software within the simulation computer will provide nonlinear modeling of the equations of motion, the vehicle aerodynamics, the primary FCS, and the uplink-downlink system. The shared-memory interface between the control law computer and the simulation computer is identical to the interface between the control law computer and the engineering computer in the RAV ground facility. This means that the same software developed and qualified in the simulation can be used in the flight system.

CONCLUDING REMARKS

A rapid prototyping facility for flight research in flight systems concepts based on artificial intelligence is essential for the early discovery and solution of many problems associated with the design of new aircraft systems. By resolving these problems early in the design cycle, many more costly and time-consuming exercises can be avoided. Such a rapid prototyping flight research facility is being developed at the Dryden Flight Research Facility of NASA Ames Research Center (Ames-Dryden) as part of the automated wingman program jointly sponsored by NASA and the Defense Advanced Research Projects Agency. This flight research facility is an extension of the remotely augmented vehicle (RAV) concept used at Ames-Dryden for testing control law concepts, implementing primary control of remotely piloted research vehicles (RPRVs), and computing cockpit display information. The RAV concept has been used with a variety of aircraft such as the three-eighths scale F-15, the F-8 digital-fly-by-wire, and the highly maneuverable aircraft technology vehicles.

This rapid prototyping flight research facility features a highly-instrumented F-18 aircraft capable of being controlled from a ground facility with both conventional minicomputers and symbolic processors. A hardware-in-the-loop simulation supports the flight research facility for development, verification, and validation of system concepts. Although it is being developed specifically for the automated wingman program, the objective of this facility is to provide the flexibility necessary to support future flight research programs.

National Aeronautics and Space Administration
Ames Research Center
Dryden Flight Research Facility
April 23, 1986

REFERENCES

1. Gaschnig, John; Klahr, Philip; Pople, Harry; Shortliffe, Edward; and Terry, Allan: Evaluation of Expert Systems: Issues and Case Studies. Building Expert Systems, Frederick Hayes-Roth, Donald A. Waterman, and Douglas D. Lenat, eds.; Addison-Wesley Publishing Co., Inc. (Reading, MA), 1983, pp. 241-280.

2. Duda, Richard O.; and Gaschnig, John G.: Knowledge-Based Expert Systems Come of Age. Applications in Artificial Intelligence, Stephen J. Andriole, ed, Petrocelli Books, Inc. (Princeton, NJ), 1985, pp 45-86.

3. Lindsay, Robert K.; Feigenbaum, E. A.; Buchanan, B. G.; and Lederberg, J.: Applications of Artificial Intelligence for Organic Chemistry: The DENDRAL Project. McGraw-Hill Book Co., Inc. (New York), 1980.

4. Duda, Richard; Gaschnig, John; and Hart, Peter: Model Design in the Prospector Consultant System for Mineral Exploration. Michie Expert Systems in the Microelectronic Age, Donald Michie, ed., Edinburgh University Press (Edinburgh), 1979, pp. 153-167.

5. Shortliffe, Edward H.: Computer-Based Medical Consultations: MYCIN. Elsevier Publishing Co. (New York), 1976.

6. Szalai, Kenneth J.: Role of Research Aircraft in Technology Development. NASA TM-85913, 1984.

7. Reed, Robert D.: RPRVs — The First and Future Flights. Astronautics and Aeronautics, vol. 12, Apr. 1974, pp. 26-42.

8. Edwards, John W.; and Deets, Dwain A.: Development of a Remote Digital Augmentation System and Application to a Remotely Piloted Research Vehicle. NASA TN D-7941, 1975.

9. Brahney, James H.: Exploring the unknown with unmanned aircraft. Aerospace Engineering, vol. 6, no. 1, 1986, pp. 22-27.

10. Szalai, Kenneth J.; Felleman, Philip G.; Gera, Joseph; And Glover, Richard D.: Design and Test Experience With a Triply Redundant Digital Fly-By-Wire Control System. AIAA-76-1911, 1976.

11. Hartman, Gary; Stein, Gunter; and Petersen, Kevin: Flight Data Processing With the F-8 Adaptive Algorithm. AIAA-77-1042, 1977.

12. Petersen, Kevin L.: Flight Experience With a Remotely Augmented Vehicle Test Technique. AIAA-81-2417, 1981.

13. Larson, Richard R.; Smith, Rogers E.; and Krambeer, Keith D.: Flight-Test Results Using Nonlinear Control With the F-8C Digital Fly-By-Wire Aircraft. AIAA-83-2174, 1983.

14. Petersen, Kevin L.: Flight Control Systems Development of Highly Maneuverable Aircraft Technology (HiMAT) Vehicle. AIAA-79-1789, 1979.

15. Duke, Eugene L.; Swann, Michael R.; Enevoldson, Einar K.; and Wolf, Thomas D.: Experience With Flight Test Trajectory Guidance. Journal of Guidance, Control, and Dynamics, vol. 6, no. 5, 1983, pp. 393-398.

16. Evans, Martha B.; and Schilling, Lawrence J.: The Role of Simulation in the Development and Flight Test of the HiMAT Vehicle. NASA TM-84912, 1984.

17. Szalai, Kenneth J.; Jarvis, Calvin R.; Krier, Gary E.; Megna, Vincent A.; Brock, Larry D.; and O'Donnell, Robert N.: Digital Fly-By-Wire Flight Control Validation Experience. NASA TM-72860, 1978.

18. Myers, Albert F.; and Sheets, Spencer G.: Qualification of HiMAT Flight Systems. 7th Annual Technical Symposium, Association for Unmanned Vehicle Systems Proceedings, Dayton, Ohio, June 1980.

19. Myers, Albert F.; Earls, Michael R.; and Callizo, Larry A.: HiMAT Onboard Flight Computer System Architecture and Qualification. Journal of Guidance, Control, and Dynamics, vol. 6, no. 4, 1983, pp. 231-238.

20. Duke, Eugene L.; Jones, Frank P.; and Roncoli, Ralph B.: Development of a Flight Test Maneuver Autopilot for a Highly Maneuverable Aircraft. AIAA-83-0061, 1983.

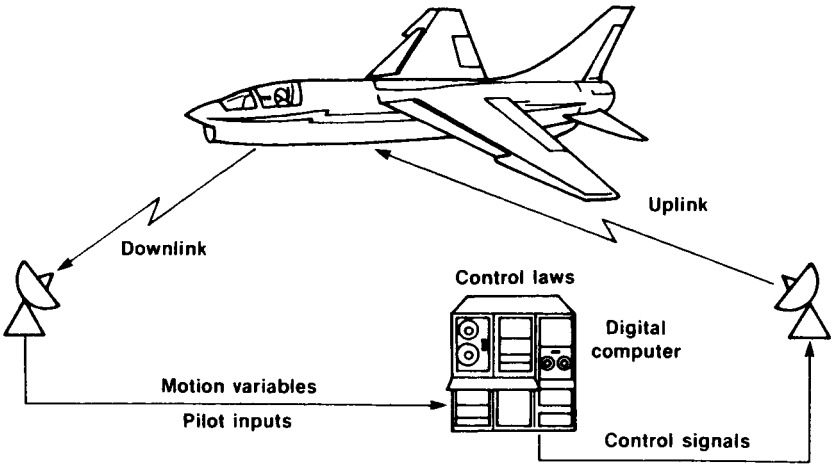

Figure 1. F-8 DFBW remotely augmented vehicle flight system.

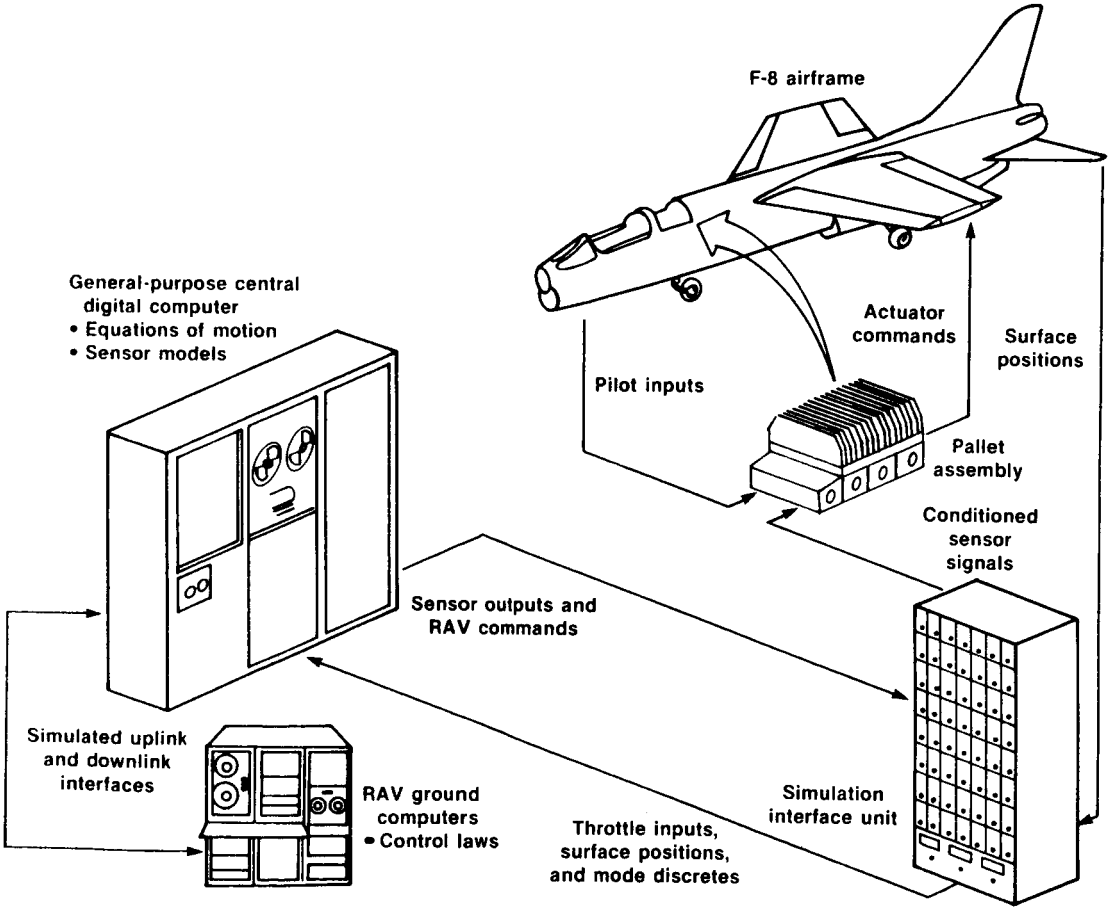

Figure 2. Iron-bird simulation of F-8 digital fly-by-wire remotely augmented vehicle.

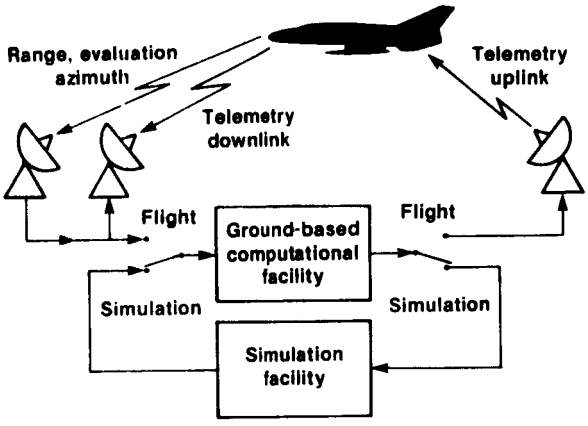

Figure 3. Remotely augmented vehicle concept.

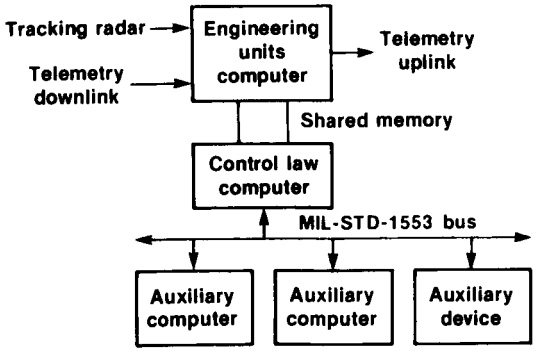

Figure 4. Configuration of ground facility in present remotely augmented vehicle system.

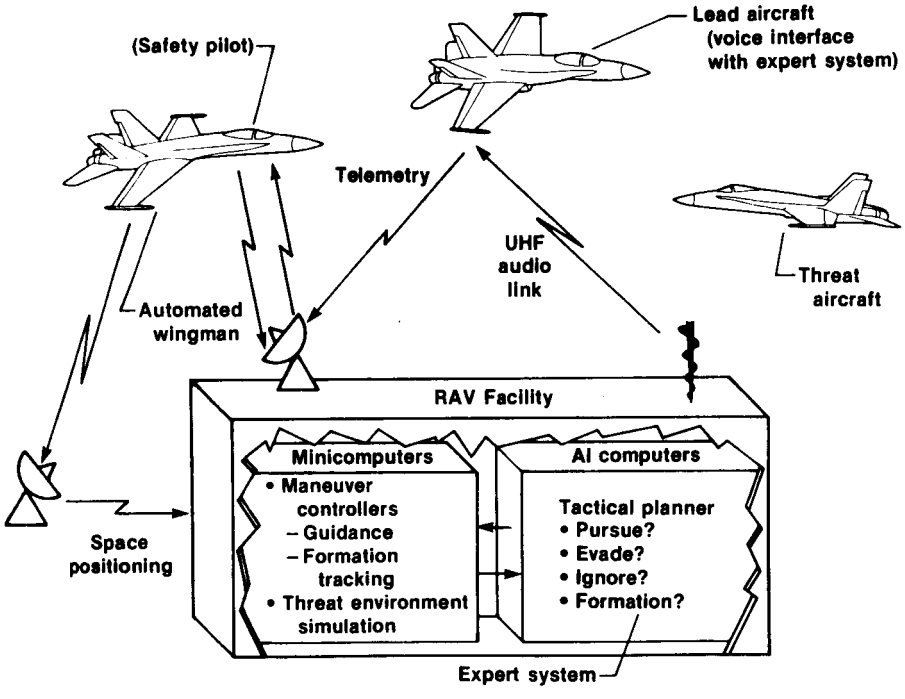

Figure 5. Flight evaluation system for automated wingman.

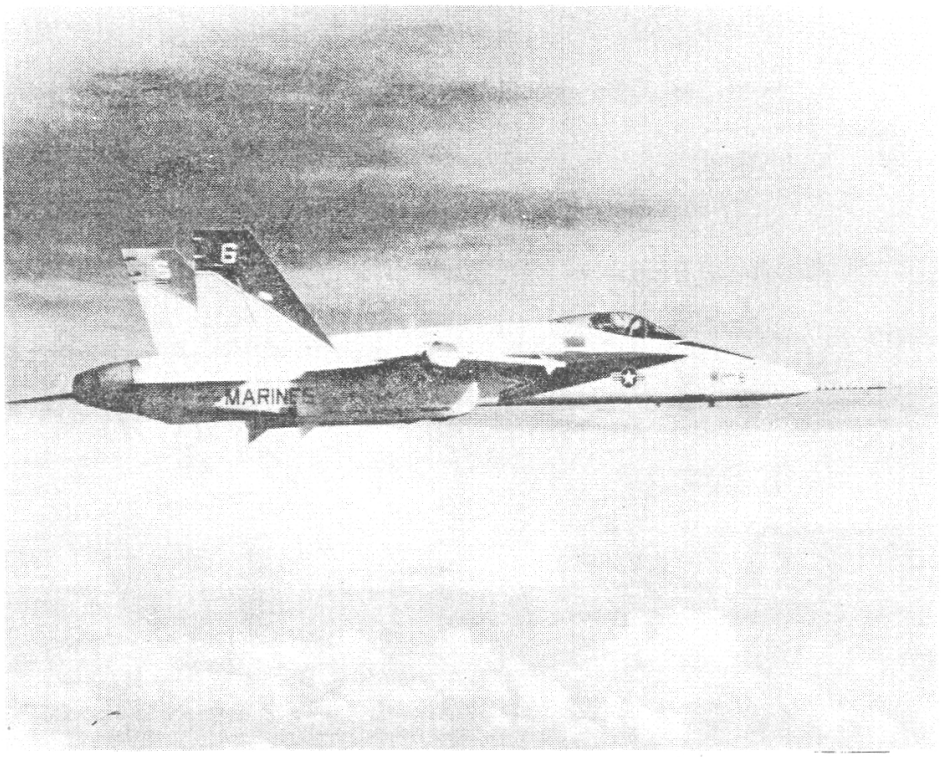

ECN 27046

Figure 6. F-18A aircraft.

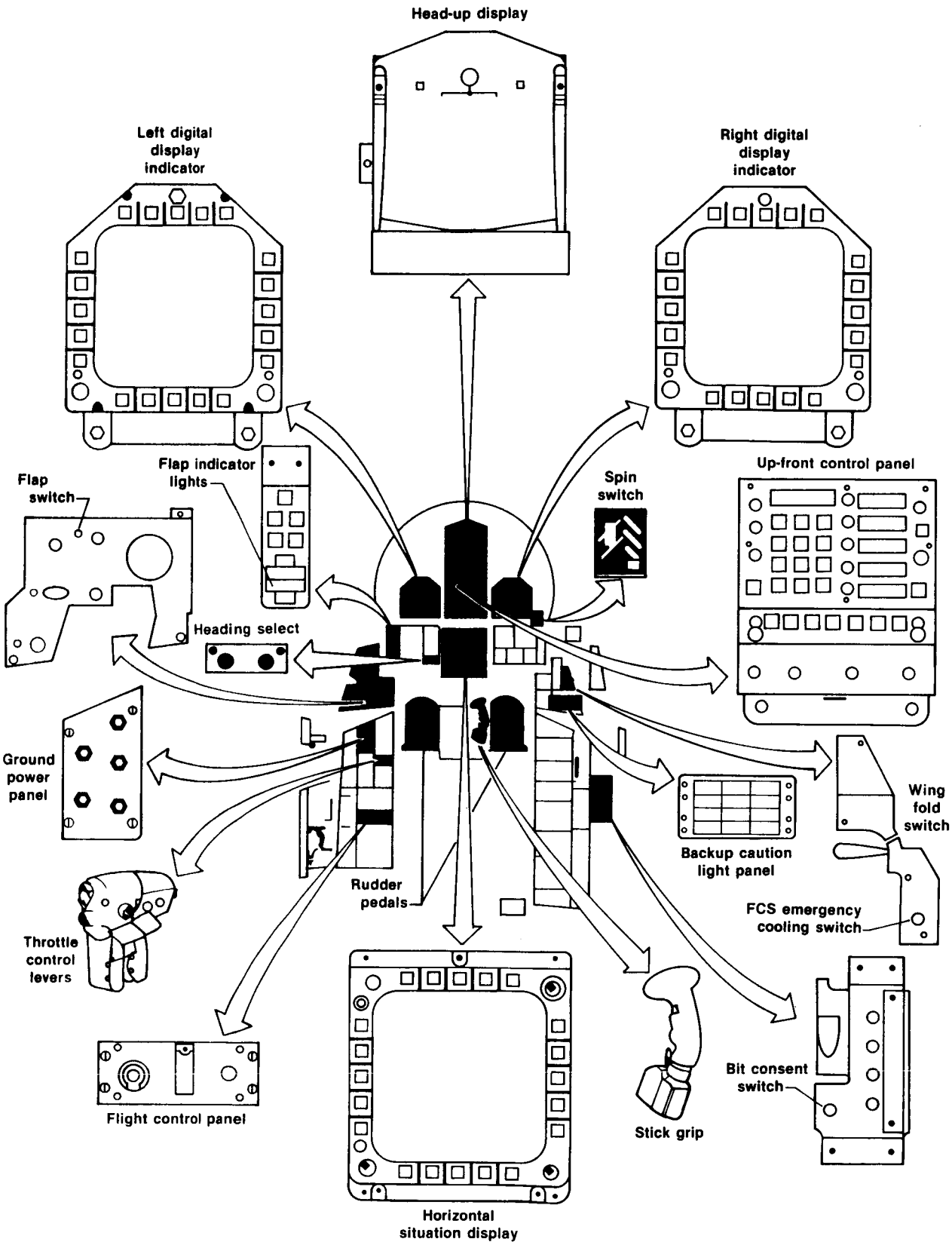

Figure 7. F-18A cockpit displays and controls.

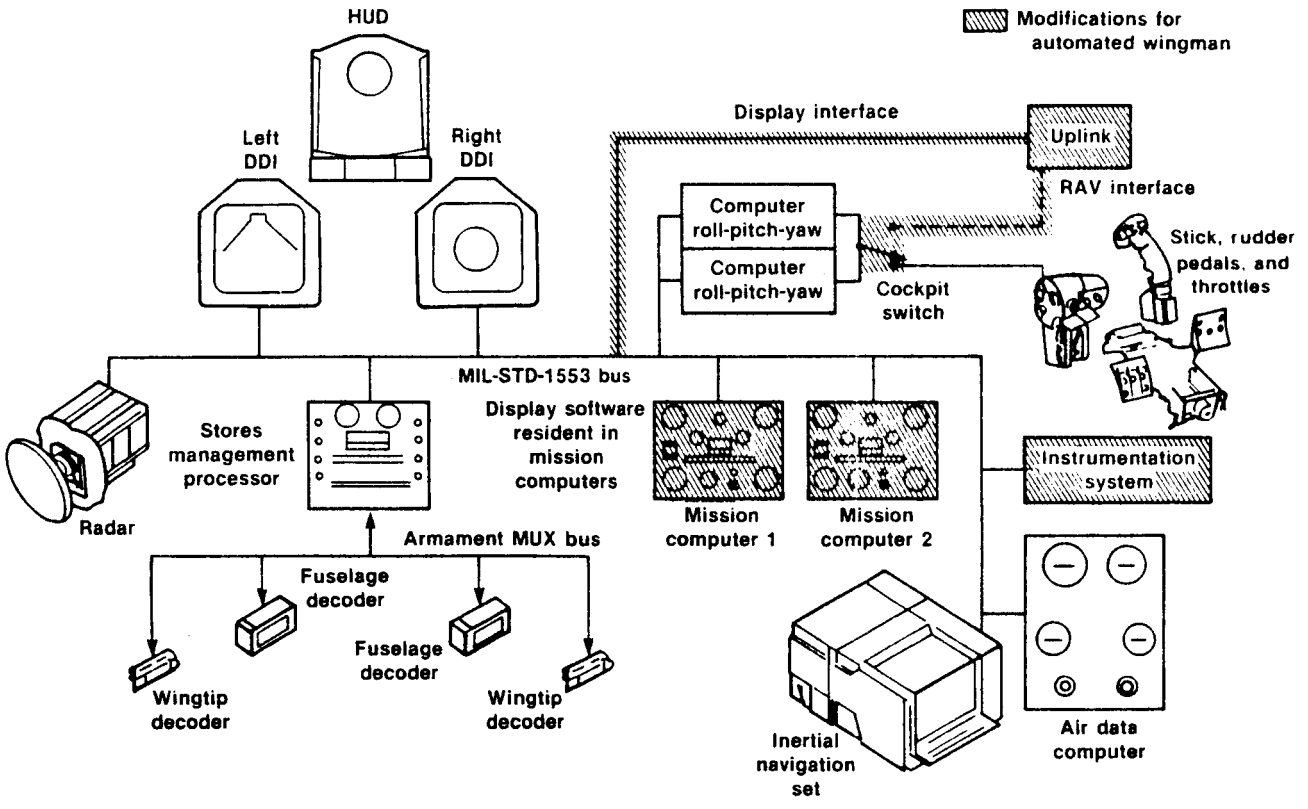

Figure 8. Automated wingman avionics.

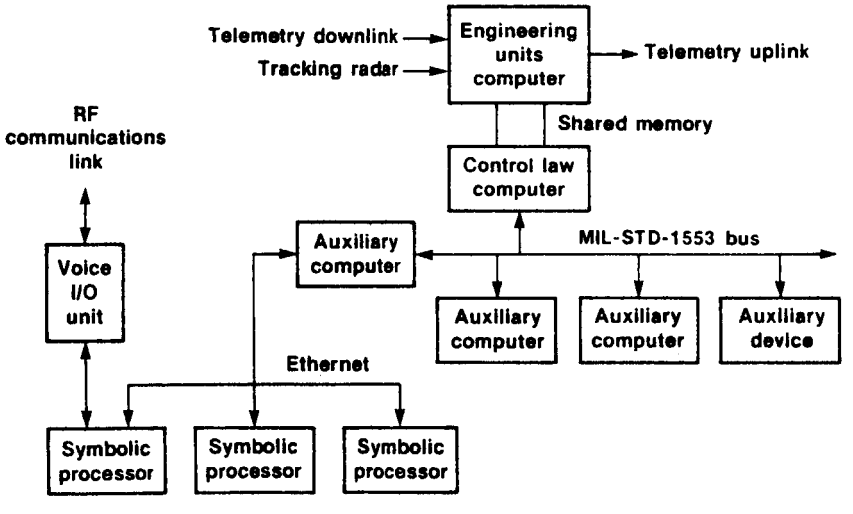

Figure 9. Ground facility concept for automated wingman remotely augmented vehicle system.

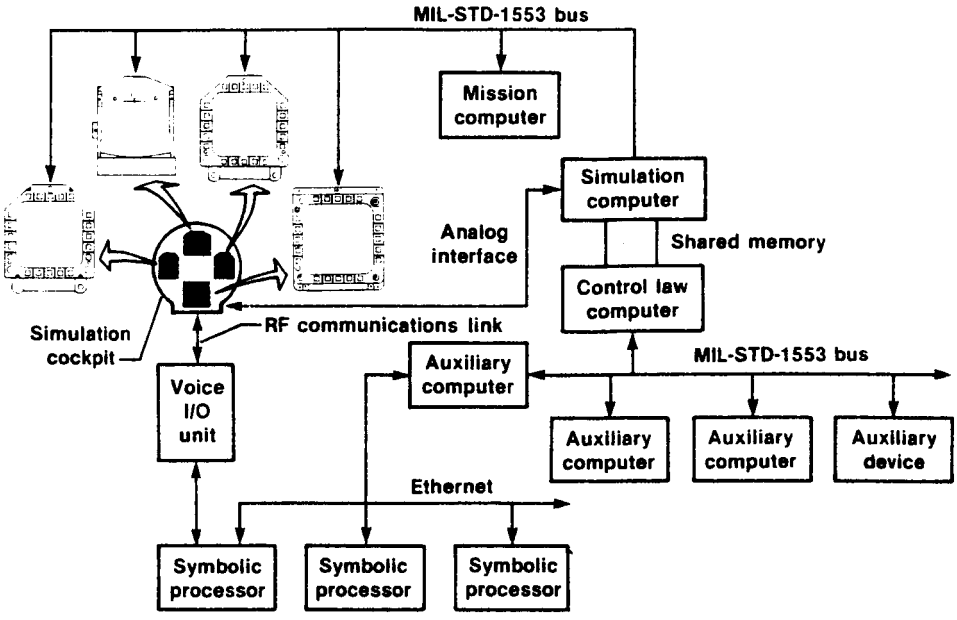

Figure 10. Simulation facility concept for automated wingman remotely augmented vehicle system.

1. Report No.	2. Government Accession No.	3. Recipient's Catalog No.
NASA TM-88268		

4. Title and Subtitle	5. Report Date
Rapid Prototyping Facility for Flight Research in Artificial-Intelligence-Based Flight Systems Concepts	October 1986
	6. Performing Organization Code
7. Author(s) Eugene L. Duke, Victoria A. Regenie, and Dwain A. Deets	8. Performing Organization Report No. H-1367
9. Performing Organization Name and Address NASA Ames Research Center Dryden Flight Research Facility P.O. Box 273 Edwards, CA 93523-5000	10. Work Unit No. RTOP 505-66-11
	11. Contract or Grant No.
12. Sponsoring Agency Name and Address National Aeronautics and Space Administration Washington, D.C. 20546	13. Type of Report and Period Covered Technical Memorandum
	14. Sponsoring Agency Code

15. Supplementary Notes

16. Abstract

The Dryden Flight Research Facility of the NASA Ames Research Center is developing a rapid prototyping facility for flight research in flight systems concepts that are based on artificial intelligence (AI). The facility will include real-time high-fidelity aircraft simulators, conventional and symbolic processors, and a high-performance research aircraft specially modified to accept commands from the ground-based AI computers. This facility is being developed as part of the NASA-DARPA automated wingman program. This document discusses the need for flight research and for a national flight research facility for the rapid prototyping of AI-based avionics systems and the NASA response to those needs.

17. Key Words (Suggested by Author(s))	18. Distribution Statement
Artificial intelligence Automated wingman Flight research facility Remotely augmented vehicle	Unclassified — Unlimited Subject category 63

19. Security Classif. (of this report)	20. Security Classif. (of this page)	21. No. of Pages	22. Price*
Unclassified	Unclassified	17	A02

For sale by the National Technical Information Service, Springfield, Virginia 22161.