NASA Technical Memorandum 104257

Overview of Supersonic Laminar Flow Control Research on the F-16XL Ships 1 and 2

Bianca T. Anderson and Marta Bohn-Meyer

October 1992

(NASA-TM-104257) OVERVIEW OF SUPERSONIC LAMINAR FLOW CONTROL RESEARCH ON THE F-16XL SHIPS 1 AND 2 (NASA) 15 p

N93-11221

Unclas

G3/02 0125233

National Aeronautics and
Space Administration

NASA Technical Memorandum 104257

Overview of Supersonic Laminar Flow Control Research on the F-16XL Ships 1 and 2

Bianca T. Anderson and Marta Bohn-Meyer
NASA Dryden Flight Research Facility
Edwards, California

1992

National Aeronautics and
Space Administration

Dryden Flight Research Facility
Edwards, California 93523-0273

Overview of Supersonic Laminar Flow Control Research on the F-16XL Ships 1 and 2

Bianca T. Anderson and Marta Bohn-Meyer
NASA Dryden Flight Research Facility

ABSTRACT

NASA is directing research to develop technology for a high-speed civil transport. Supersonic laminar flow control has been identified as a program element, since it offers significant drag-reduction benefits and is one of the more promising technologies for producing an economically viable aircraft design. NASA is using two prototype F-16XL aircraft to research supersonic laminar flow control. The F-16XL planform is similar to design planforms of high-speed civil transports. The planform makes the aircraft ideally suited for developing technology pertinent to high-speed transports. This paper describes the supersonic laminar flow control research programs for both aircraft. Some general results of the ship-1 program presented in the paper demonstrate that significant laminar flow was obtained using laminar flow control on a highly swept wing at supersonic speeds.

INTRODUCTION

Studies conducted for the year 2000 and beyond have indicated a need for long-range (5000 to 6000 nmi or 9260 to 11,112 km)[1,2] aircraft. A market for supersonic transports is also indicated to minimize the time for long-range flight. To make supersonic aircraft economically feasible, attention must be given to drag-minimization technologies. Particular attention has been given to supersonic laminar flow control (SLFC). NASA has identified SLFC as a key element of the High-Speed Research Program. The main objective of this program is to develop the necessary technologies to enable private industry to design and build a supersonic transport.

With this objective, SLFC research is currently underway at the NASA Dryden Flight Research Facility and Langley Research Center. The centerpiece of SLFC flight research is the F-16XL aircraft. The F-16XL is ideally suited for high-speed research because its planform is similar to proposed high-speed civil transport (HSCT) designs and it is capable of supersonic speeds. Two F-16XL aircraft are currently used in the SLFC research.

The F-16XL ship 1 has completed the initial flights of an SLFC program conducted jointly by NASA Dryden, NASA Langley, and Rockwell International. The objectives of the initial program were to develop and validate computational fluid dynamics (CFD) methodology for future aircraft design applications and to demonstrate laminar flow control (LFC) for a highly swept wing configuration. References 3, 4, and 5 provide the ship-1 results.

NASA Dryden and NASA Langley are conducting a follow-on supersonic flight experiment using the existing SLFC glove and suction system on ship 1. The objectives are to

1. Obtain suction-level distributions
2. Measure the pressure distribution over the 25-percent chord length of the active glove
3. Validate CFD codes and design methodology
4. Evaluate flow-visualization techniques to detect transition and crossflow disturbances.

The F-16XL ship 2 is currently in the first phase of a two-phase flight research program. The main objectives of the ship-2 program are to

1. Achieve 50 to 60 percent laminar flow on a highly swept wing at supersonic speeds

2. Deliver validated CFD codes and design methodology to industry for designing supersonic laminar flow wings

3. Establish LFC suction system design criteria to more accurately integrate the concept into the design of an HSCT

The first phase consists of a passive laminar flow glove on the wing leading edge region. The second phase of the flight program is to design, fabricate, install, and obtain flight data from an active LFC glove that is 50 to 60 percent wing chord in length. This paper will present an overview of the SLFC programs being conducted on ships 1 and 2 and some general results of the ship-1 initial flight program.

AIRCRAFT DESCRIPTIONS

The F-16XL ship 1 is a single-place aircraft powered by a Pratt & Whitney (West Palm Beach, Florida) F100-PW-200 engine. The inboard region of the wing leading edge has 70° of sweep, and the outboard wing leading edge region has 50° of sweep. The aircraft is capable of speeds near Mach (M) 2.0 and altitudes up to 60,000 ft (18.3 km). The left wing of the aircraft has been modified with an LFC glove, as shown in Fig. 1. Suction is provided by a modified Convair 880/990 (General Dynamics, Convair Division, San Diego, California) air conditioning turbocompressor mounted in the fuselage, which operates with engine bleed air.

The F-16XL ship 2 is a two-place aircraft powered by a General Electric (Lynn, Massachusetts) F110-GE-129 engine. The aircraft is similar to ship 1 in planform and capable of speeds exceeding Mach 2. The aircraft is currently configured with a passive glove on the right side of the wing (Fig. 2). This glove does not require a suction system.

Both F-16XL aircraft are instrumented with a flight test noseboom to measure total and static pressure, angle of attack (α), and angle of sideslip. The aircraft was instrumented to measure total and static temperature, aircraft Euler angles, accelerations, and control surface positions.

SHIP-1 PROGRAM

EXPERIMENT DESCRIPTION - The SLFC glove on ship 1 consists of an active-glove section with suction and a passive-glove section without suction. The active glove has a microperforated titanium skin with 2500 holes/in^2, 0.0025 in. (0.006 cm) diameter each. The flow disturbances in the boundary layer are sucked through the perforated skin, past 22 airflow flutes that run parallel to the glove leading edge, and out to the turbocompressor (Fig. 3). Conceptual design studies were conducted for the point design of M = 1.6, α = 2°, and an altitude of 44,000 ft (13.4 cm).

The passive and active portions of the glove were designed and fabricated by Rockwell International, North American Aircraft Division, El Segundo, California. The final design of the perforated glove and pressure orifice regions of the passive glove consisted of a modified NACA 65A003 thickness distribution with a leading edge radius of 0.25 in. (0.64 cm). References 3 and 5 present further details of the glove design.

The suction system was designed to provide the required suction distribution. The suction system uses flutes of constant area cross-section that parallel the glove leading edge. Figure 3 shows a schematic of the suction system. The air from the flutes travels inboard through suction tubes, ground adjustable ball valves, and venturi tubes, into a plenum that is connected to the turbocompressor. The venturi tubes used in the first phase of the program were selected to allow the required mass flow when choked at the design condition. For the follow-on program the venturi tubes were replaced with subsonic flow tubes that contained added instrumentation to obtain more accurate mass-flow measurements.

Two primary areas of boundary-layer flow instability that had to be controlled were the attachment-line boundary layer, which is the boundary layer that develops along the leading edge, and crossflow instability, which develops downstream from the leading edge. Contamination of the attachment-line boundary layer was controlled by isolating the turbulent flow from the fuselage. This isolation was done by maintaining a sharp leading edge with less sweep on the inboard section of the passive-glove fairing. The crossflow instability was controlled by distributing suction through the perforated skin on the glove.

GLOVE INSTRUMENTATION - For the initial flights, the LFC glove surface was instrumented with 2 rows of 41 flush static pressure orifices and 3 skin-temperature gauges. In addition, 30 hot-film sensors were installed in locations which varied from flight to flight. Figure 4 shows a layout of the instrumentation on the LFC glove that obtained the data presented in this paper. The figure shows five rows of hot-film sensors on the active glove and one row on the passive glove. All rows were not installed at the

same time since the sensors in one row could disturb the flow ahead of the sensors in another row. Reference 5 provides a detailed description of the instrumentation.

Pressure distribution and transition data were obtained for a Mach number range of 1.2 to 1.7 and an altitude range of 35,000 to 55,000 ft (10.7 to 16.7 km).

GENERAL RESULTS OF INITIAL FLIGHT TESTS - In the initial testing, 31 flights were conducted. The general results of the phase-1 testing showed that with active LFC, large regions of laminar flow could be obtained at off-design flight conditions. No laminar flow, however, was obtained on the active glove at the design point of Mach 1.6 at 44,000 ft (13.4 km). Figure 5 presents an example of the results with and without suction for a case where laminar flow was obtained. This case is for Mach greater than 1 at 55,000 ft (16.7 km). Note that some laminar flow was achieved even without the suction system operational. The transition front was not uniform in either case, possibly caused by several factors. Two important factors are that the attachment line does not align itself uniformly along the leading edge and that the suction level may not be uniform across the test section. Reference 5 gives more detailed transition results.

Another encouraging result was that the attachment line remained laminar over a wider than expected angle-of-attack range. To evaluate the glove attachment-line boundary-layer state, single element hot-film sensors were placed near the leading edge at selected locations. Instrumentation was not placed directly on the leading edge so as to avoid tripping the attachment-line boundary layer. Figure 6 presents unit Reynolds number as a function of angle of attack for the outboard section of the active glove. The closed symbol data points shown are cases where the attachment line was laminar on the active glove, and the open symbols are for cases where the attachment line was turbulent. As shown, the resulting angle-of-attack range for a laminar attachment line was from 0° to 2.7°.

The transition and pressure distribution data from flight were used to correlate and validate CFD codes.[3] Calculated CFD pressure distributions were compared with flight-obtained pressure distributions at different angles of attack. Figure 7 presents a comparison of the computed and the flight-measured pressure distributions. The computed pressure distributions are at α = 2°, and the flight measured pressure distributions are at α = 1.1° and 2.0°. Results of the study indicated that α = 1.1° was the better match to the 2° computational pressure distribution. In general, the CFD data at α = 2° and the flight data at α = 1.1° agreed reasonably well.

FOLLOW-ON FLIGHT EXPERIMENT, SHIP 1 - The main objective of the follow-on activity is to obtain accurate mass-flow measurements and suction-distribution measurements to correlate with the CFD predictions. With the subsonic venturi tubes installed, it is necessary to re-map the transition front because the mass flow values may change. Once the transition mapping is complete, streamwise rows of miniature strip-of-tube will be installed on the active glove to measure pressure distributions on the active glove.[6]

For the follow-on flight testing a higher density of hot-film sensors (spaced every 2 in. (5 cm)) is used to map the transition front. This higher density is obtained by using a sheet with many sensors instead of the single-element sensors used in the initial flight program. Reference 7 presents details on the hot-film sheets. Four rows of strip-of-tube will be installed to obtain pressure distribution measurements on the active glove in the streamwise direction. Figures 8(a) and 8(b) show the layout of the hot-film sensors and the strip-of-tubing, respectively. A row of strip-of-tube is also placed near the outboard flush orifice row to compare the two types of static pressure measurements.

Liquid crystals are being evaluated as a technique for visualizing boundary-layer transition on the passive glove.[8] For this evaluation a portion of the outboard active glove is painted black, and a video camera is installed on the wingtip of the left wing (Fig. 9). This camera is being used to record liquid crystal patterns on the outboard passive glove during the flight.

SHIP-2 PROGRAM

After successfully obtaining laminar flow on F-16XL ship 1, the prospect of maintaining laminar flow on a supersonic transport has been greatly enhanced. Many questions still remain unanswered, however, such as attachment-line effects, leading-edge radius effects, effects of steps and gaps, and very high Reynolds number effects. The objectives of the ship-2 SLFC experiment plan address these questions.

The inboard section of the passive glove of ship 1, which was seen in Fig. 1, proved to be successful in keeping the attachment-line boundary layer laminar; but it does not represent the design for future HSCTs. For the passive glove on ship 2, the

inboard shaping and the sharp leading edge will be kept. For the active glove, plans currently have a modified inboard leading-edge fairing which keeps the sweep of the inboard leading edge a constant 70°.

PHASE-1 EXPERIMENT DESCRIPTION - For the phase-1 experiment, a passive glove will be installed on the right wing of F-16XL ship 2 (Fig. 10). The passive glove was designed to produce a pressure distribution favorable for maintaining laminar flow and to sustain a constant momentum thickness Reynolds number along the attachment line. The glove shape was designed by McDonnell Douglas (Long Beach, California) under an existing contract.

The passive glove was fabricated of foam and fiberglass. The glove extends from the inboard region of the wing to the 50° to 70° sweep break to approximately 10 percent chord on the upper surface. The glove is instrumented with five rows of flush static pressures, three flush surface microphones, and rows of hot-film sensors. Figure 10 shows the instrumentation layout.

The passive glove was designed for 3° angle of attack and a Mach number range of 1.6 to 1.8; however, it will be flight-tested for conditions ranging from Mach 1.2 to 1.9. The altitude range will be from 35,000 to 60,000 ft (10.7 to 18.3 km) to provide a unit Reynolds number range of approximately 1.5 to 4.2 million/ft.

One primary goal of the passive glove is to obtain detailed surface pressure distribution data, particularly in the leading-edge region, to calibrate the existing Euler and Navier-Stokes analysis codes. Another important area is the attachment-line boundary layer. The state of the attachment-line boundary layer will be analyzed at various span stations using micro-thin hot-film sheets.[8] The Reynolds number and angle-of-attack envelope for a laminar attachment-line boundary layer will be determined for several span stations. For the case of a turbulent attachment-line boundary layer, passive methods of controlling attachment-line transition will be evaluated during this phase of the SLFC program. Methods to eliminate attachment-line turbulence will be investigated using leading-edge devices designed to shed the turbulent boundary layer and establish a new laminar attachment-line boundary layer. Reference 9 describes some of these leading edge devices.

The acoustic disturbance environment, which can affect boundary-layer transition, also will be evaluated during this phase of the program by embedding flush microphones in the glove surface. Another possible investigation could determine the sensitivity of the attachment-line boundary layer to surface roughness, steps, and gaps–an important area of study for manufacturing and operation of future laminar flow aircraft.

PHASE-2 EXPERIMENT DESCRIPTION - For the phase-2 program, an active suction panel will be installed on the left wing from the leading edge to approximately 50 percent chord with fiberglass fairings to modify the wing contour and the left side of the fuselage (Fig. 11). In this phase the glove will be designed to provide laminar flow over the entire active glove section, to optimize suction levels, and to validate design tools for HSCTs with active LFC. The suction system will be designed to allow the suction levels to adjust in flight as well as on the ground.

The aerodynamic contour of the panels will provide a pressure distribution favorable for maintaining a laminar boundary layer with minimum suction levels. For this phase of the experiment, the suction levels and flight conditions will be varied to determine the greatest region of laminar flow over the glove and the minimum suction level requirements. A Reynolds number and angle-of-attack envelope for achieving laminar flow will be established for several span stations of the glove. A detailed study of the effect of surface roughness, steps, gaps, and manufacturing tolerances also will be conducted. The data obtained will permit validation of aerodynamic design and analysis codes as well as refinement of design methodologies.

SUMMARY

This paper presented brief overviews of the supersonic laminar flow control programs conducted on the F-16XL aircraft, ships 1 and 2, at the NASA Dryden Flight Research Facility.

The ship-1 program consisted of a glove designed by Rockwell International for the design condition of Mach 1.6 at 44,000 ft (13.4 km). The flight program was conducted in two phases. The first phase provided the first supersonic laminar flow control flight data for a highly swept leading edge configuration. The second phase included subsonic flow venturi tubes, which provided an accurate measure of the mass flow. Additional pressure distribution measurements, detailed transition mapping, and transition flow visualization using liquid crystals also were obtained.

The general results of the phase-1 testing showed that with active laminar flow control, large

regions of laminar flow could be obtained at off-design flight conditions. No laminar flow was obtained, however, on the active glove at the design point of Mach 1.6 at 44,000 ft (13.4 km). Additionally, the attachment line remained laminar over a greater angle-of-attack range than expected. The data from the ship-1 flight tests are currently being used to validate computational fluid dynamics codes.

The ship-2 program is also being conducted in two phases. The first phase uses a passive glove and the second an active glove to extend to approximately 50 to 60 percent chord. The main objectives of the ship-2 program are to (1) achieve 50 to 60 percent laminar flow on a highly swept wing at supersonic speeds, (2) deliver validated CFD codes and design methodology to industry for designing supersonic laminar flow wings, and (3) establish laminar flow control suction system design criteria to more accurately integrate the concept into the design of a high-speed civil transport.

NOMENCLATURE

CFD	computational fluid dynamics
Cp	pressure coefficient
Hp	altitude
HSCT	high-speed civil transport
HSRP	High-Speed Research Program
L	wing sweep
LFC	laminar flow control
M	Mach number
SLFC	supersonic laminar flow control
x/c	nondimensional chord location
α	angle of attack, deg

REFERENCES

1. Boeing Commercial Airplanes, New Airplane Development, *High-Speed Civil Transport Study*, NASA CR-4233, 1989.
2. Powell, A.G., S. Agrawal, and T.R. Lacey, *Feasibility and Benefits of Laminar Flow Control on Supersonic Cruise Airplanes*, NASA CR-181817, 1989.
3. Woan, C.J., P.B. Gingrich, and M.W. George, "CFD Validation of a Supersonic Laminar Flow Control Concept," AIAA-91-0188, Jan. 1991.
4. Flores, Jolen, Eugene Tu, Bianca Anderson, and Stephen Landers, "A Parametric Study of the Leading Edge Attachment Line for the F-16XL," AIAA-91-1621, June 1991.
5. Anderson, Bianca T., Bruce H. Rowan, and Stephen F. Landers, *F-16XL Supersonic Laminar Flow Control Glove Initial Flight Test Results*, NASA Technical Memorandum to be published.
6. Montoya, Lawrence C. and David P. Lux, *Comparisons of Wing Pressure Distribution From Flight Tests Of Flush And External Orifices For Mach Numbers From 0.50 to 0.97*, NASA TM X-56032, 1975.
7. Holmes, Bruce J. and Clifford J. Obara, "Advances in Flow Visualization Using Liquid-Crystal Coatings," SAE Paper 871017, 1987.
8. Agarwal, Naval K., Dal V. Maddalon, Siva M. Mangalam, and Fayette S. Collier, Jr., "Cross-Flow Vortex Structure and Transition Measurements Using Multi-Element Hot-Films," AIAA-91-0166, Jan. 1991.
9. Creel, T.R., "Effects of Sweep Angle and Passive Relaminarization Devices on a Supersonic Swept-Cylinder Boundary Layer," AIAA-91-0066, Jan. 1991.

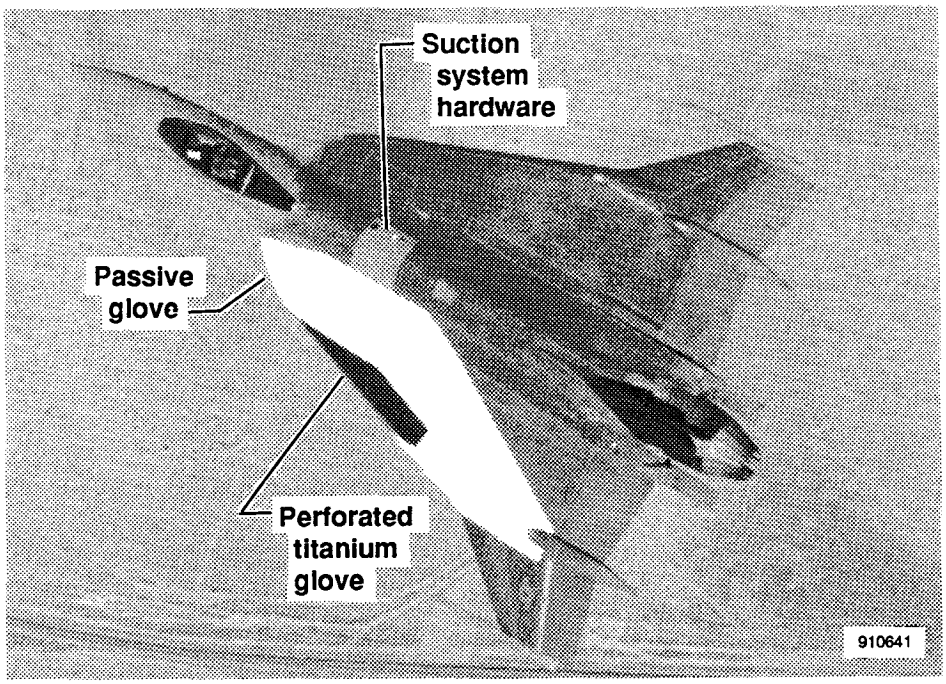

Fig. 1 F-16XL single-place aircraft with the SLFC glove installed on the left wing.

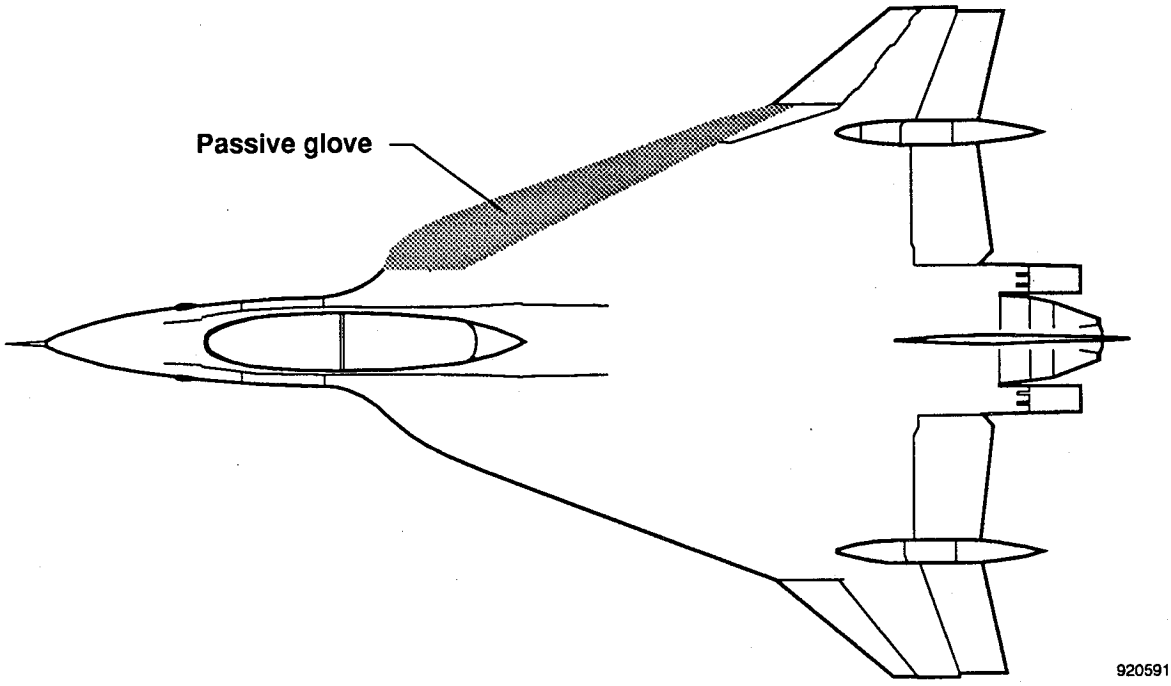

Fig. 2 F-16XL ship 2 with the passive glove.

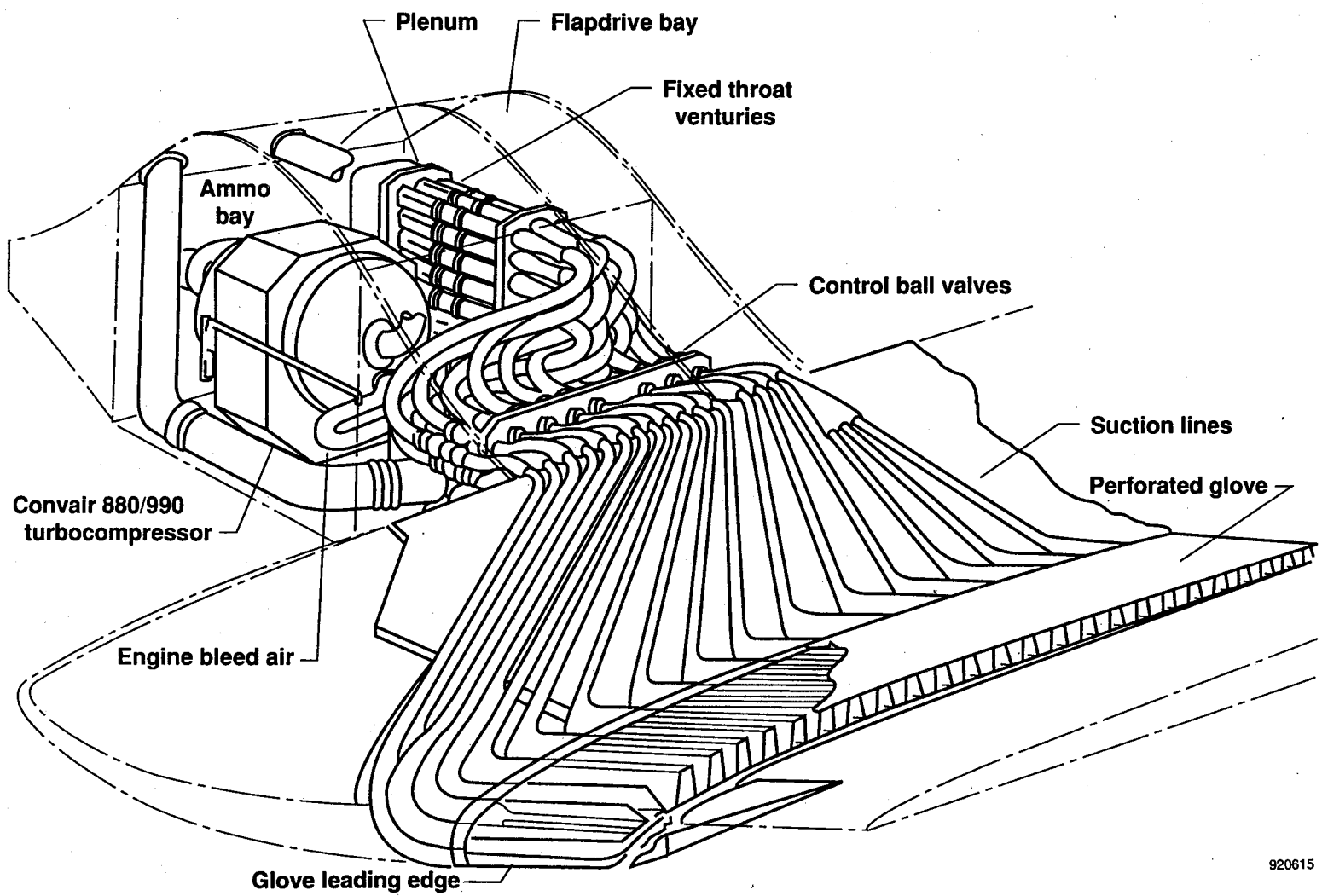

Fig. 3 SLFC suction system schematic.

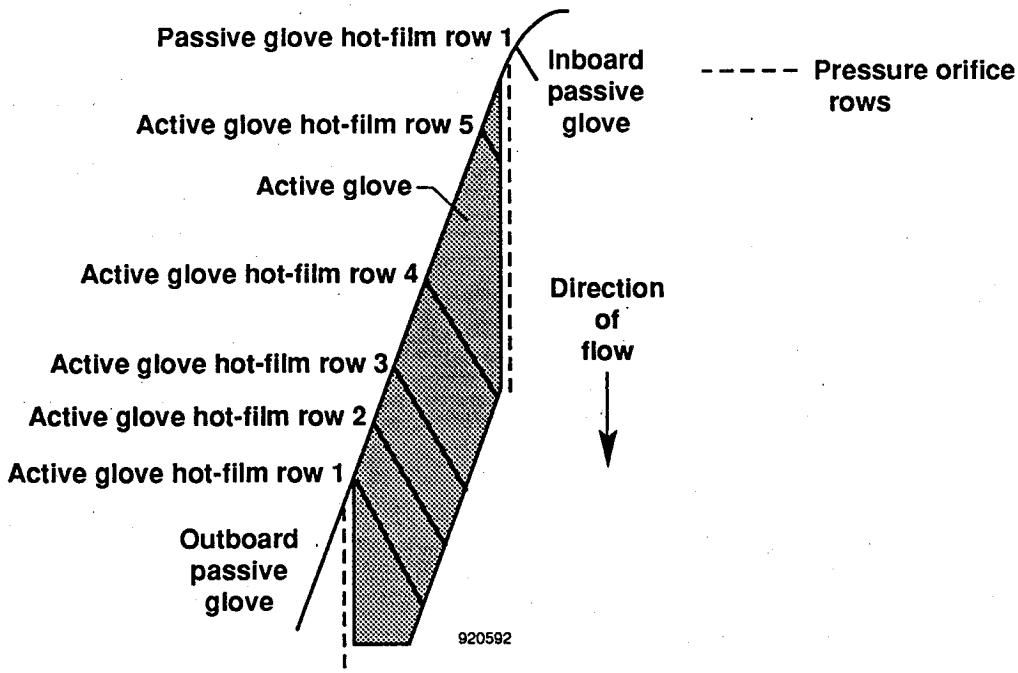

Fig. 4 F-16XL ship-1 initial flight instrumentation.

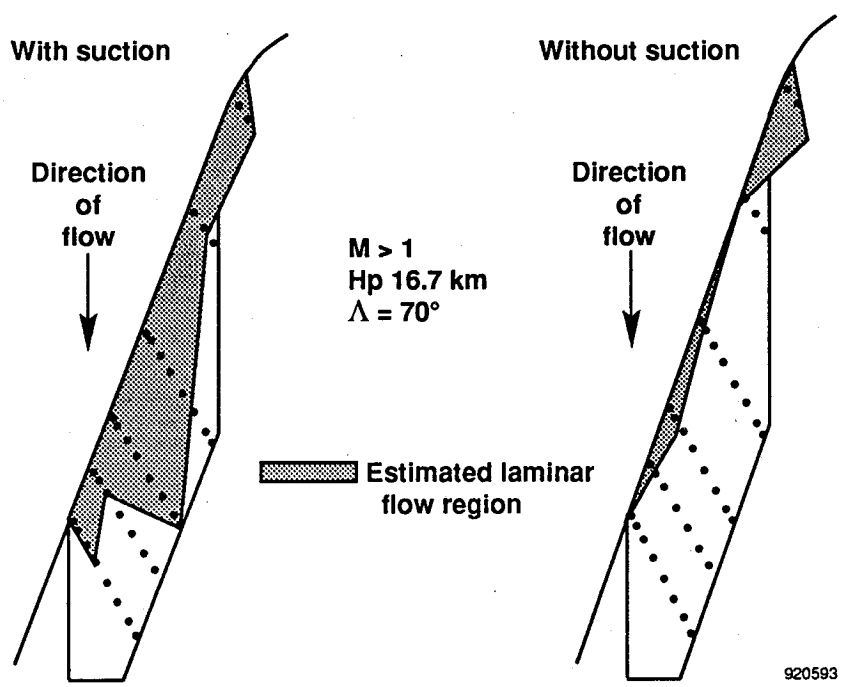

Fig. 5 Laminar region on the active glove with and without suction.

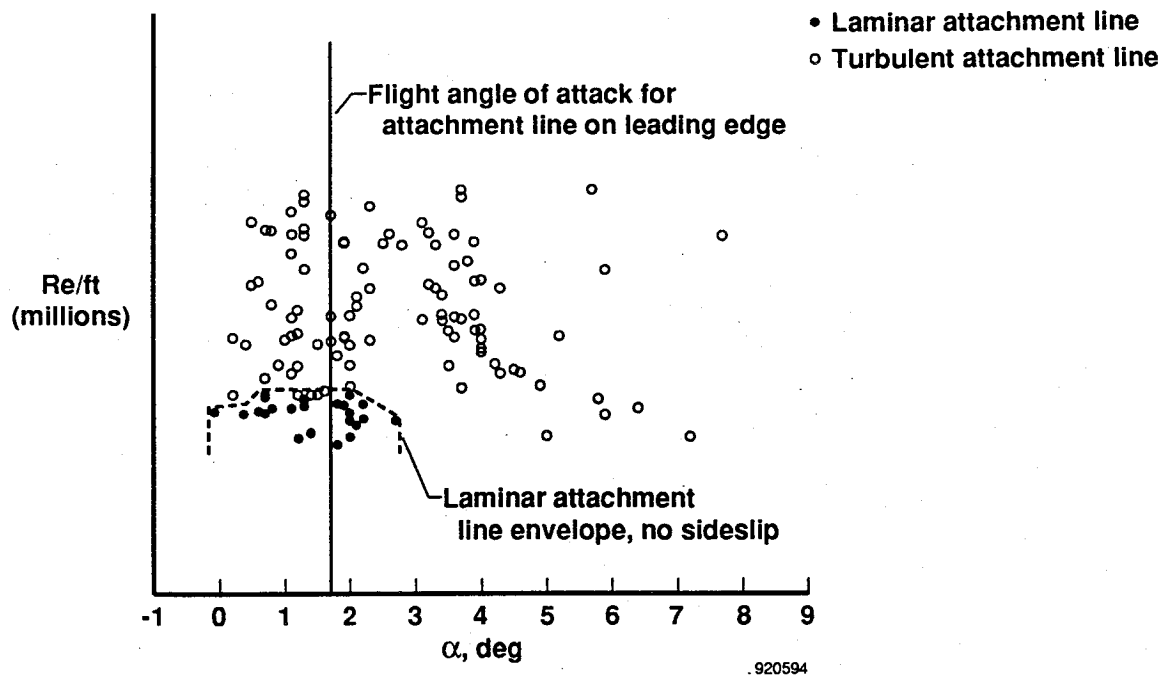

Fig. 6 Angle-of-attack range for a laminar attachment line.

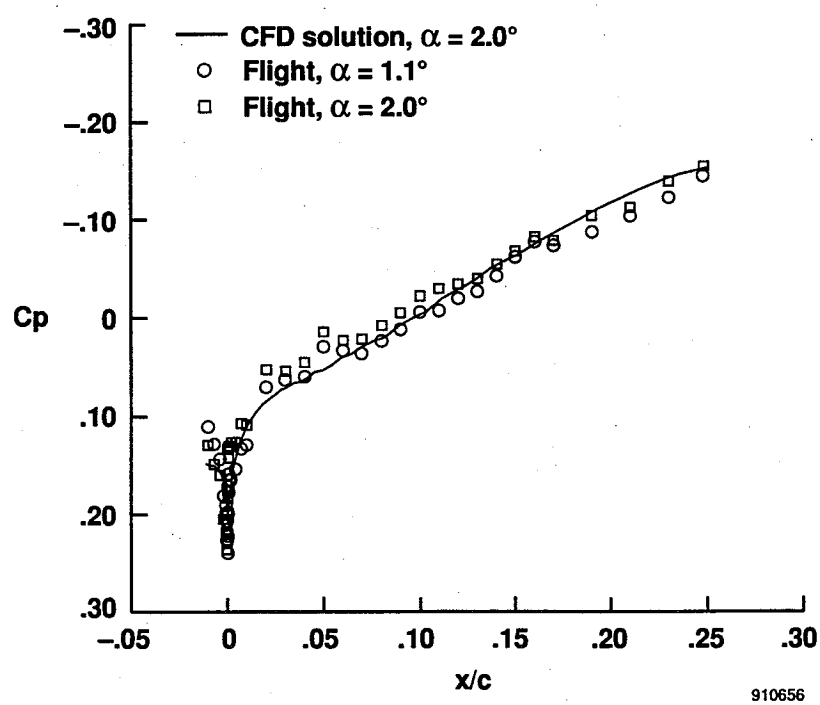

(a) Inboard orifice row.

Fig. 7 Comparisons between the CFD solutions and flight data for M = 1.6, Hp = 44,000 ft, and α = 2.0 and 1.1.

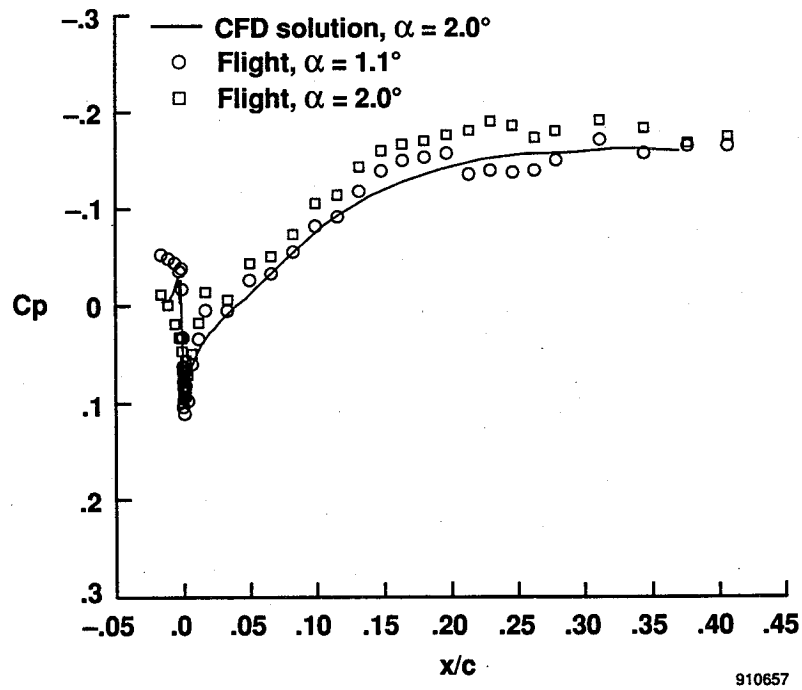

(b) Outboard orifice row.

Fig. 7 Concluded.

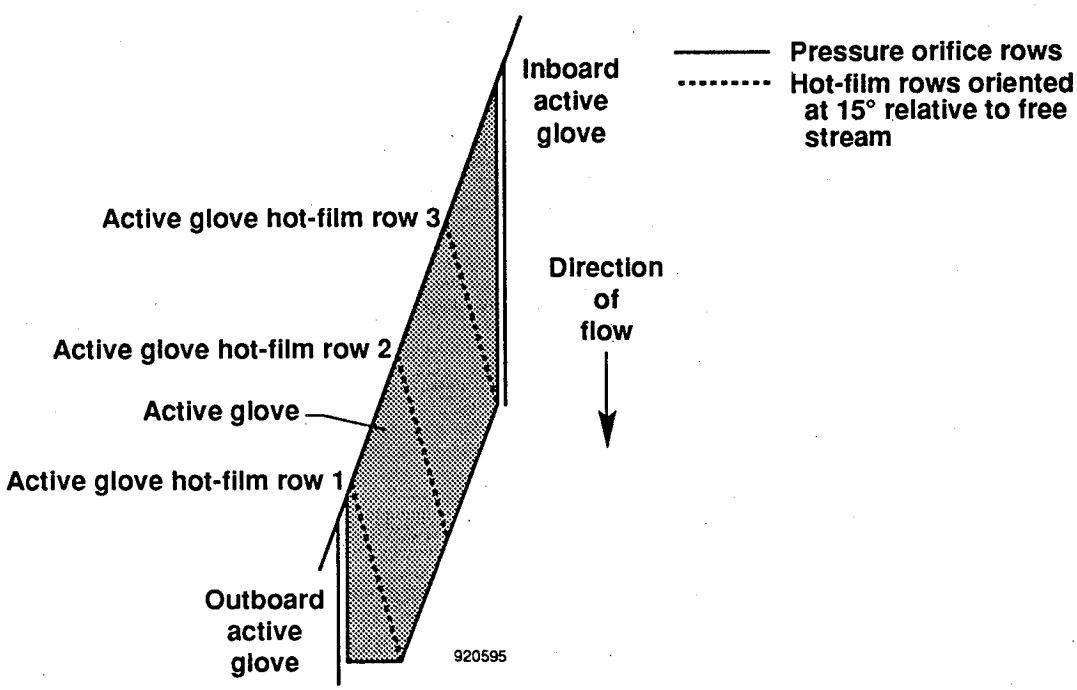

(a) Hot-film sensor and flush static pressure orifice layout.

Fig. 8 F-16XL ship-1 follow-on instrumentation.

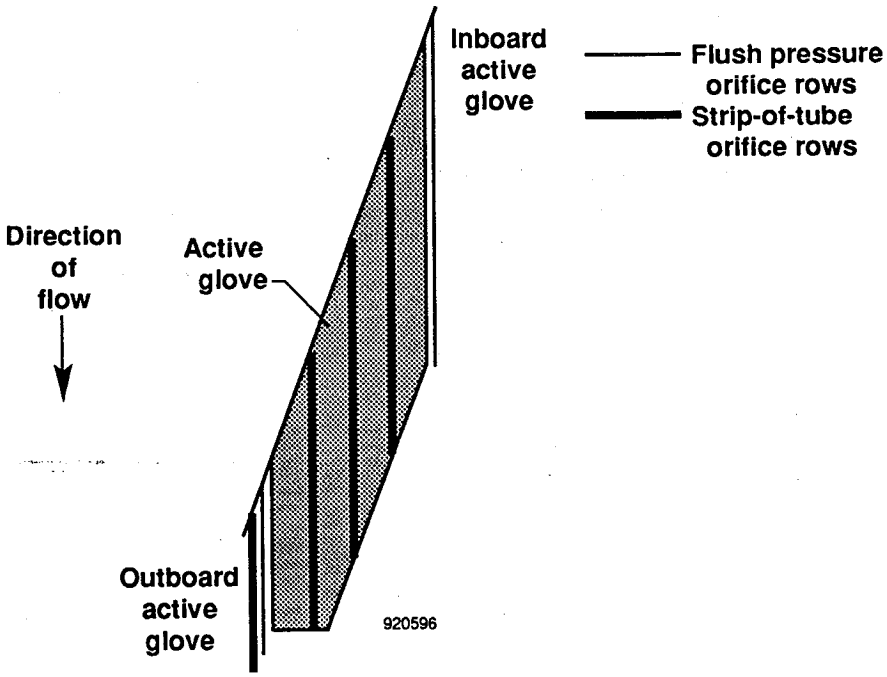

(b) Flush static and strip-of-tube pressure orifice layout.

Fig. 8 Concluded.

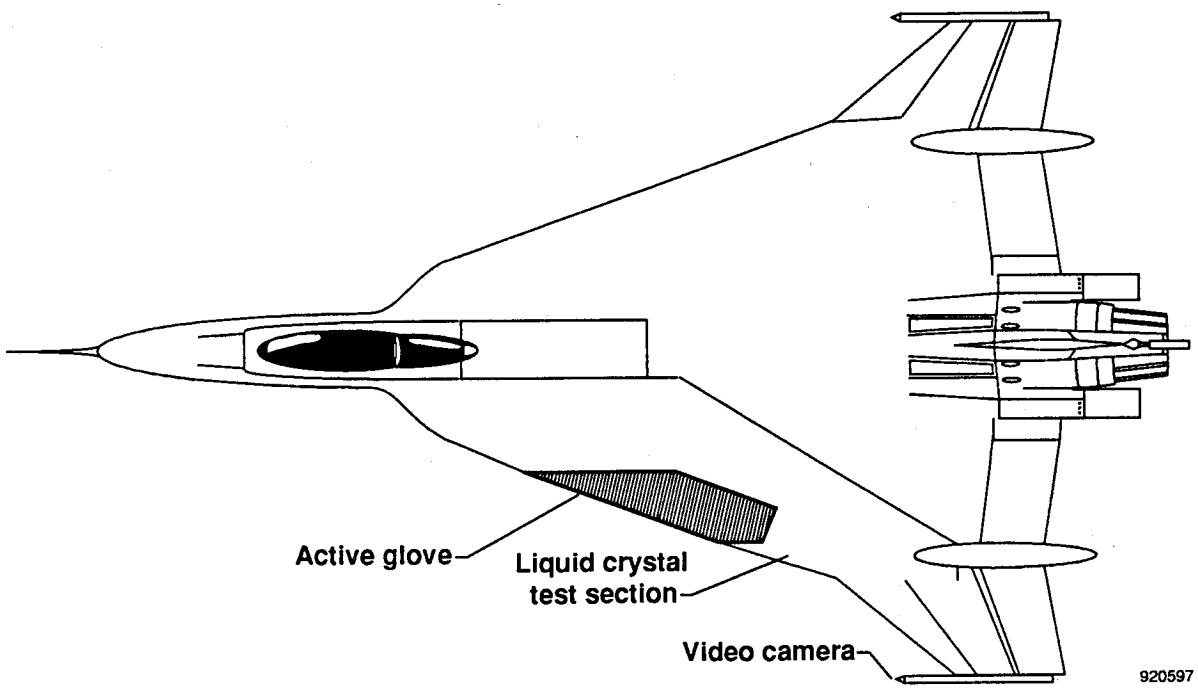

Fig. 9 Liquid crystal experiment setup.

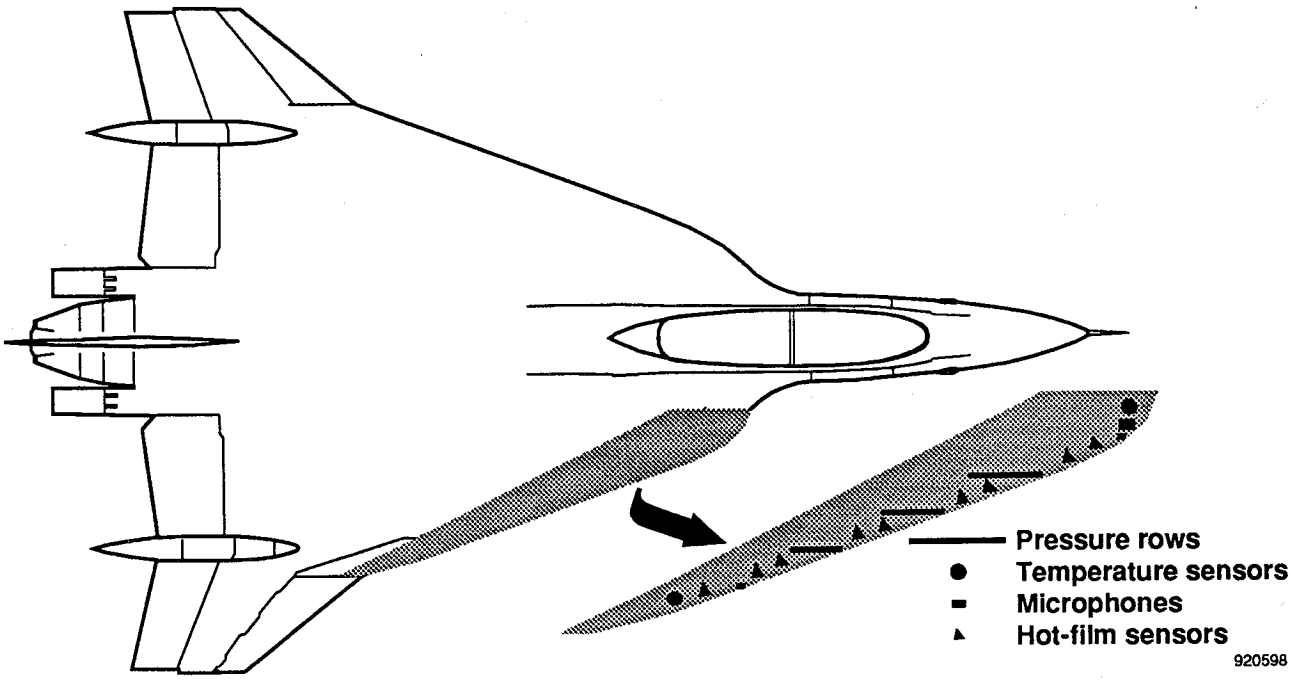

Fig. 10 Passive-glove instrumentation layout.

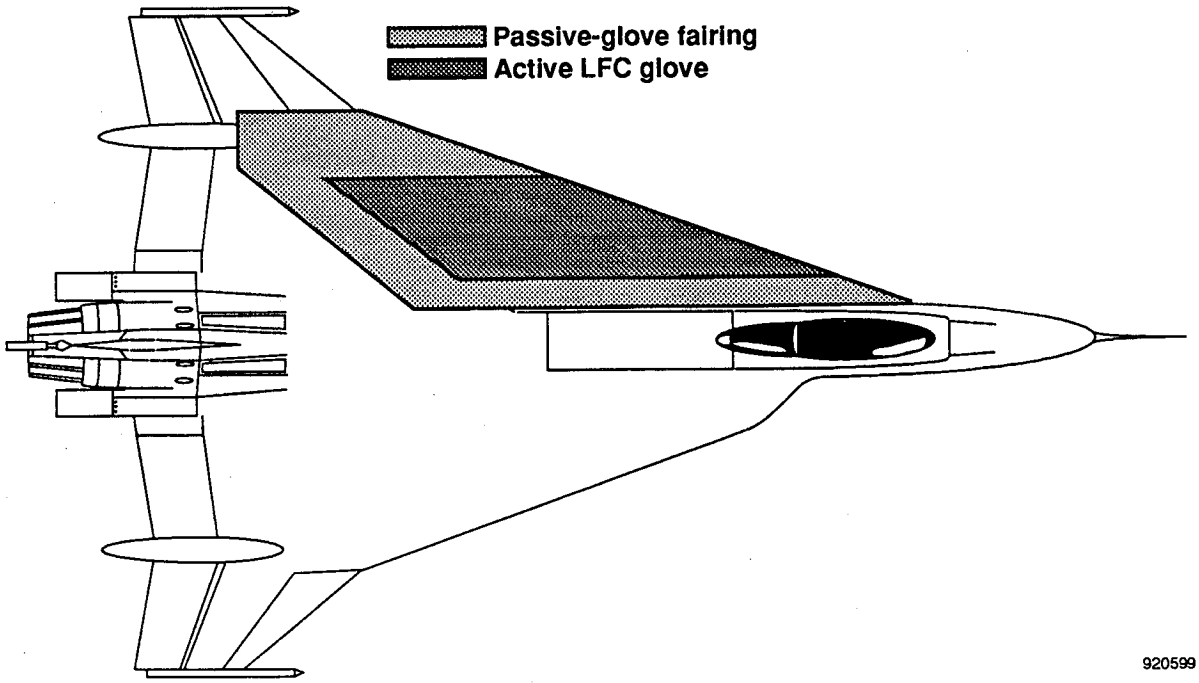

Fig. 11 General SFLC glove layout for F-16XL ship 2.

REPORT DOCUMENTATION PAGE

Form Approved
OMB No. 0704-0188

Public reporting burden for this collection of information is estimated to average 1 hour per response, including the time for reviewing instructions, searching existing data sources, gathering and maintaining the data needed, and completing and reviewing the collection of information. Send comments regarding this burden estimate or any other aspect of this collection of information, including suggestions for reducing this burden, to Washington Headquarters Services, Directorate for information Operations and Reports, 1215 Jefferson Davis Highway, Suite 1204, Arlington, VA 22202-4302, and to the Office of Management and Budget, Paperwork Reduction Project (0704-0188), Washington, DC 20503.

1. AGENCY USE ONLY *(Leave blank)*	2. REPORT DATE	3. REPORT TYPE AND DATES COVERED
	October 1992	Technical Memorandum

4. TITLE AND SUBTITLE

Overview of Supersonic Laminar Flow Control Research on the F-16XL Ships 1 and 2

5. FUNDING NUMBERS

WU 533-02-39

6. AUTHOR(S)

Bianca T. Anderson and Marta Bohn-Meyer

7. PERFORMING ORGANIZATION NAME(S) AND ADDRESS(ES)

NASA Dryden Flight Research Facility
P.O. Box 273
Edwards, CA 93523-0273

8. PERFORMING ORGANIZATION REPORT NUMBER

H-1858

9. SPONSORING/MONITORING AGENCY NAME(S) AND ADDRESS(ES)

National Aeronautics and Space Administration
Washington, DC 20546-0001

10. SPONSORING/MONITORING AGENCY REPORT NUMBER

NASA TM-104257

11. SUPPLEMENTARY NOTES

Prepared as SAE paper 921994 for the Aerotech '92 Conference, Anaheim, California, October 5–8, 1992.

12a. DISTRIBUTION/AVAILABILITY STATEMENT

Unclassified — Unlimited
Subject Category 02

12b. DISTRIBUTION CODE

13. ABSTRACT *(Maximum 200 words)*

NASA is directing research to develop technology for a high-speed civil transport. Supersonic laminar flow control has been identified as a program element, since it offers significant drag-reduction benefits and is one of the more promising technologies for producing an economically viable aircraft design. NASA is using two prototype F-16XL aircraft to research supersonic laminar flow control. The F-16XL planform is similar to design planforms of high-speed civil transports. The planform makes the aircraft ideally suited for developing technology pertinent to high-speed transports. This paper describes the supersonic laminar flow control research programs for both aircraft. Some general results of the ship-1 program presented in the paper demonstrate that significant laminar flow was obtained using laminar flow control on a highly swept wing at supersonic speeds.

14. SUBJECT TERMS

Boundary layer control; F-16XL aircraft; Laminar boundary layer; Supersonic boundary layers

15. NUMBER OF PAGES

16

16. PRICE CODE

A03

17. SECURITY CLASSIFICATION OF REPORT	18. SECURITY CLASSIFICATION OF THIS PAGE	19. SECURITY CLASSIFICATION OF ABSTRACT	20. LIMITATION OF ABSTRACT
Unclassified	Unclassified	Unclassified	Unlimited