SECURITY INFORMATION

CONFIDENTIAL

Copy 6
RM L52K13b

FEB 24 1953

NACA RM L52K13b

RESEARCH MEMORANDUM

FLIGHT MEASUREMENTS OF THE STABILITY CHARACTERISTICS OF THE BELL X-5 RESEARCH AIRPLANE IN SIDESLIPS AT 59° SWEEPBACK

By Joan M. Childs

Langley Aeronautical Laboratory
Langley Field, Va.

CLASSIFICATION CANCELLED

Authority NACA Res. Abs. Date 2/8/56
RN 97
By [illegible] 2/27/56 See

CLASSIFIED DOCUMENT

This material contains information affecting the National Defense of the United States within the meaning of the espionage laws, Title 18, U.S.C., Secs. 793 and 794, the transmission or revelation of which in any manner to an unauthorized person is prohibited by law.

NATIONAL ADVISORY COMMITTEE FOR AERONAUTICS

WASHINGTON

February 11, 1953

CONFIDENTIAL

NACA LIBRARY
LANGLEY AERONAUTICAL LABORATORY
Langley Field, Va.

NASA Technical Library
3 1176 01436 9715

NATIONAL ADVISORY COMMITTEE FOR AERONAUTICS

RESEARCH MEMORANDUM

FLIGHT MEASUREMENTS OF THE STABILITY CHARACTERISTICS OF THE BELL X-5 RESEARCH AIRPLANE IN SIDESLIPS AT 59° SWEEPBACK

By Joan M. Childs

SUMMARY

Flight measurements of the stability characteristics of the Bell X-5 research airplane at 59° sweepback were made in steady sideslips at Mach numbers from 0.62 to 0.97 at altitudes ranging between 35,000 and 40,000 feet. The results showed that the apparent directional stability was positive and increased at Mach numbers above 0.90. The apparent effective dihedral was positive and high, increasing at Mach numbers above 0.75. The cross-wind force coefficient per degree of sideslip was positive and increased rapidly at Mach numbers above 0.94.

INTRODUCTION

The Bell X-5 airplane was procured by the U. S. Air Force for research, in the transonic speed range, with an airplane having extreme amounts of sweepback but using variable sweep angle so that the landing would not be a problem. The acceptance tests of the airplane were conducted by the manufacturer (Bell Aircraft Corp.). Results from these tests were reported in references 1 and 2. One of the two airplanes was assigned to the NACA High-Speed Flight Research Station at Edwards Air Force Base, Calif., for detailed measurements of the aerodynamic characteristics. The NACA tests to date have been concerned with characteristics with the wings swept back to 59° which is the extreme case for the airplane. This paper presents results of measurements of the lateral and directional stability in sideslips performed as part of the stability and control program for the airplane.

[redacted]

SYMBOLS

M	Mach number
β	sideslip angle, deg
δ_r	rudder deflection, deg
δ_{a_T}	total aileron deflection, deg
φ	angle of bank, deg
$d\delta_r/d\beta$	apparent directional stability parameter, slope of variation of rudder deflection with sideslip angle
$d\delta_{a_T}/d\beta$	apparent effective dihedral parameter, slope of variation of total aileron deflection with sideslip angle
$d\varphi/d\beta$	variation of angle of bank with sideslip angle
C_{N_A}	airplane normal-force coefficient
C_{Y_β}	lateral-force coefficient per degree of sideslip
h_p	pressure altitude, ft

AIRPLANE

The Bell X-5 airplane is a single-place fighter-type airplane powered by an Allison J-35-A-17 turbojet engine. It is designed for research in the transonic speed range and incorporates a wing having flight-variable sweepback between 20° and 59°. Figure 1 is a photograph of the airplane and figure 2 is a three-view drawing of the airplane with 59° sweepback. Table I contains the airplane physical characteristics. Reference 1 gives a complete description of the airplane and its wing sweep angle and longitudinal translation characteristics. The friction in the control systems as measured on the ground under no load is shown in figure 3.

INSTRUMENTATION

NACA internal instruments, synchronized by a common timer, recorded the following quantities:

Airspeed and altitude
Vertical, longitudinal, and transverse accelerations
Sensitive longitudinal acceleration
Rolling angular velocity
Pitching angular velocity and acceleration
Yawing angular velocity and acceleration
Angle of sideslip and angle of attack
Aileron, elevator, rudder, and stabilizer positions
Wing sweep angle
Elevator and aileron stick force
Rudder pedal force

In reference 1 the airspeed system is discussed and the Mach number calibration accuracy as obtained from a radar-phototheodolite calibration is given as ±0.01.

TESTS, RESULTS, AND DISCUSSION

The static lateral stability characteristics were measured in gradually increasing and decreasing sideslips at various speeds with the airplane in the clean configuration with 59° sweepback. These sideslips were performed by deflecting the rudder and using aileron and elevator to maintain straight flight. The Mach number range covered was from 0.62 to 0.97 at altitudes ranging between 35,000 and 40,000 feet.

The results of these tests are presented in figure 4 which shows aileron, rudder, and elevator positions and forces plotted as functions of the sideslip angle. There is discontinuity in elevator force and position in figure 4(a) because the maneuver was done in two separate data runs. Angle of bank as calculated from the measured transverse acceleration is also shown. Most of the scatter of these data results from the almost continuous oscillatory motions of the airplane during the sideslip maneuvers. The apparent directional stability is indicated by variation of rudder position with sideslip angle, whereas the apparent effective dihedral is shown by the slope of aileron position as plotted against sideslip angle. The variation of elevator position and force with sideslip angle indicates the pitching moment due to sideslip, whereas the angle of bank plotted against sideslip angle is indicative of the cross-wind force characteristics.

The slopes $d\varphi/d\beta$, $d\delta_r/d\beta$, and $d\delta_{a_T}/d\beta$ obtained from figure 4 are presented as functions of Mach number in figure 5. The apparent directional stability parameter $d\delta_r/d\beta$ is positive and approximately constant at a value of 1.6 to a Mach number of about 0.92 where it starts to increase reaching a value of 2.6 at $M = 0.97$. The apparent effective dihedral parameter $d\delta_{a_T}/d\beta$ is high throughout the Mach number range and constant at a value of 6.7 to $M = 0.75$ where it starts to increase to a value of about 13.5 at $M = 0.97$. These changes in $d\delta_r/d\beta$ and $d\delta_{a_T}/d\beta$, of course, result both from changes in control effectiveness and from changes of effective dihedral and weathercock stability. The apparent effective dihedral is so high that at lower Mach numbers only about 5° of sideslip can be trimmed out while at the highest Mach numbers the available aileron is insufficient to trim more than about 2.5° of sideslip. In this condition the ailerons are easily overpowered by the rudder.

There was little change in elevator position throughout the test range indicating little or no change in pitching moment due to sideslip.

The cross-wind force is stable, requiring right bank for right sideslip. The parameter $d\varphi/d\beta$ shows a gradual increase with Mach number to a value at $M = 0.94$ which is approximately double the value at $M = 0.62$. At Mach numbers greater than 0.94, $d\varphi/d\beta$ increases abruptly reaching a value approximately five times its low-speed value at $M = 0.97$. The coefficient C_{Y_β}, as calculated by the relation $-C_{Y_\beta} = C_{N_A} \sin \varphi$, is presented in figure 6 as a function of Mach number. The variation of C_{N_A} with Mach number is also shown in this figure. The value of C_{Y_β} remains constant at about -0.0085 up to a Mach number of 0.94 where it increases to a value of approximately -0.0135 at a Mach number of 0.97. The variation C_{Y_β} with Mach number does not follow the $d\varphi/d\beta$ variation in figure 5 because of the change of C_{N_A} with Mach number.

CONCLUSIONS

Flight measurements of the static lateral stability characteristics of the Bell X-5 research airplane at 59° sweepback in steady sideslips at Mach numbers of 0.62 to 0.97 at altitudes ranging between 35,000 and 40,000 feet give the following conclusions:

1. Throughout the Mach number range the apparent directional stability is positive. It is constant from a Mach number of 0.62 to 0.90 and increases to a value about 60 percent higher as the Mach number increases to 0.97.

2. The apparent effective dihedral is positive and high, doubling in value between Mach numbers of 0.75 and 0.97. The dihedral is so high at the highest Mach number that the ailerons can only trim out about 2.5° of sideslip and can be easily overpowered by the rudder.

3. The cross-wind force coefficient per degree of sideslip is stable and constant to a Mach number of 0.94, above which it increases rapidly to a Mach number of 0.97.

4. There is little or no change in pitching moment due to sideslip.

Langley Aeronautical Laboratory,
National Advisory Committee for Aeronautics,
Langley Field, Va.

REFERENCES

1. Finch, Thomas W., and Briggs, Donald W.: Preliminary Results of Stability and Control Investigation of the Bell X-5 Research Airplane. NACA RM L52K18b, 1953.

2. Rogers, John T., and Dunn, Angel H.: Preliminary Results of Horizontal Tail-Load Measurements of the Bell X-5 Research Airplane. NACA RM L52G14, 1952.

TABLE I.- PHYSICAL CHARACTERISTICS OF BELL X-5 AIRPLANE

Airplane:	
Weight, lb:	
Full fuel	9960
Less fuel	7850
Power plant:	
Axial-flow turbojet engine	J-35-A-17
Guaranteed rated thrust at 7800 rpm and static sea-level conditions, lb	4900
Center-of-gravity position, percent M.A.C.:	
Full fuel	45.6
Less fuel	46.2
Over-all height, ft	12.2
Over-all length, ft	33.6
Wing:	
Airfoil section (perpendicular to 38.02-percent-chord line):	
Pivot point	NACA $64_{(10)}$A011
Tip	NACA $64_{(08)}$A008.28
Sweep angle at 0.25 chord, deg	59
Area, sq ft	184.3
Span, ft	20.0
Span between equivalent tips, ft	19.2
Aspect ratio	2.16
Taper ratio	0.4095
Mean aerodynamic chord, ft	10.05
Location leading edge of mean aerodynamic chord, fuselage station	100.2
Incidence root chord, deg	0
Dihedral, deg	0
Geometric twist, deg	0
Wing flaps (split):	
Area, sq ft	15.9
Span, parallel to hinge center line, ft	6.53
Chord, parallel to line of symmetry at 20° sweepback, in.:	
Root	30.8
Tip	19.2
Travel, deg	60
Slats (leading edge divided):	
Area, sq ft	14.6
Span, parallel to leading edge, ft	10.3
Chord, perpendicular to leading edge, in.:	
Root	11.1
Tip	6.6

NACA

TABLE I.- PHYSICAL CHARACTERISTICS OF BELL X-5 AIRPLANE - Concluded

Travel, percent wing chord:	
Forward	10
Down	5
Aileron (45-percent internal-seal pressure balance):	
Area (each aileron behind hinge line), sq ft	3.62
Span parallel to hinge center line, ft	5.15
Travel, deg	±15
Chord, percent wing chord	19.7
Moment area rearward of hinge line (total), in.^{3}	4380
Horizontal tail:	
Airfoil section (parallel to fuselage center line)	NACA 65A006
Area, sq ft	31.5
Span, ft	9.56
Aspect ratio	2.9
Sweep angle at 0.25 percent chord, deg	45
Mean aerodynamic chord, in.	42.8
Position of 0.25 M.A.C., fuselage station	355.6
Stabilizer travel, (power actuated), deg:	
Leading edge up	4.5
Leading edge down	7.5
Elevator (20.8-percent overhang balance, 31.5 percent span):	
Area rearward of hinge line, sq ft	6.9
Travel from stabilizer, deg:	
Up	25
Down	20
Chord, percent horizontal tail chord	30
Moment area rearward of hinge line (total), in.^{3}	4200
Vertical tail:	
Airfoil section (parallel to rearward fuselage center line)	NACA 65A006
Area, sq ft	29.5
Span, perpendicular to rearward fuselage center line, ft	6.25
Aspect ratio	1.32
Sweep angle of leading edge, deg	43
Fin:	
Area, sq ft	24.8
Rudder (23.1-percent overhang balance, 26.3 percent span):	
Area rearward of hinge line, sq ft	4.7
Span, ft	4.43
Travel, deg	±35
Chord, percent horizontal tail chord	22.7
Moment area rearward of hinge line, in.^{3}	3585

NACA

Figure 1.- Photograph of Bell X-5 research airplane in flight with 60° sweepback.

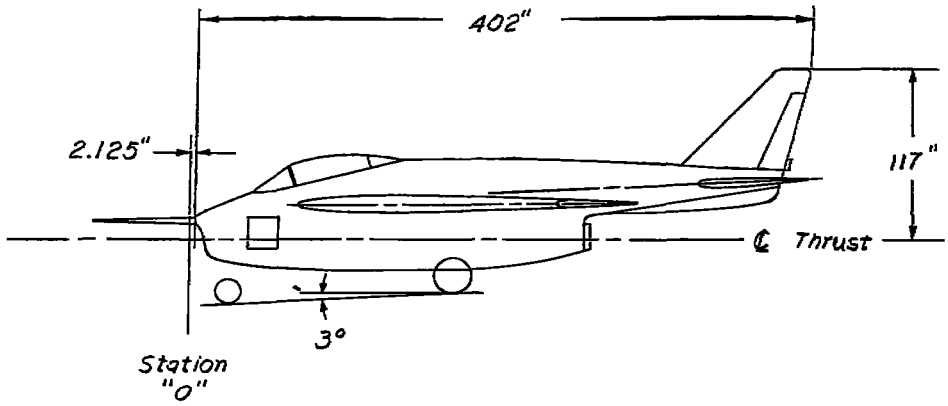

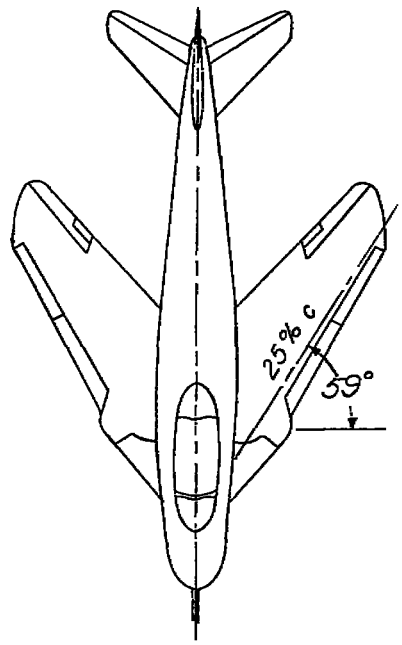

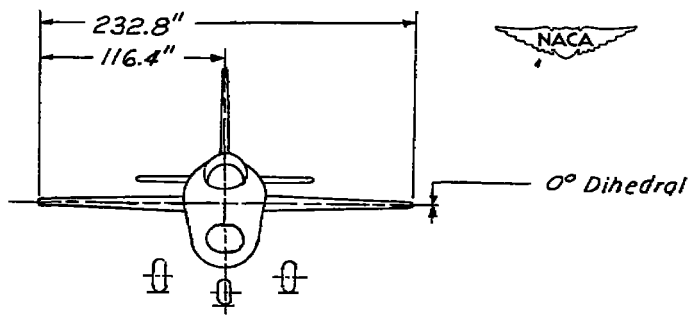

Figure 2.- Three-view drawing of Bell X-5 research airplane at 59° sweepback.

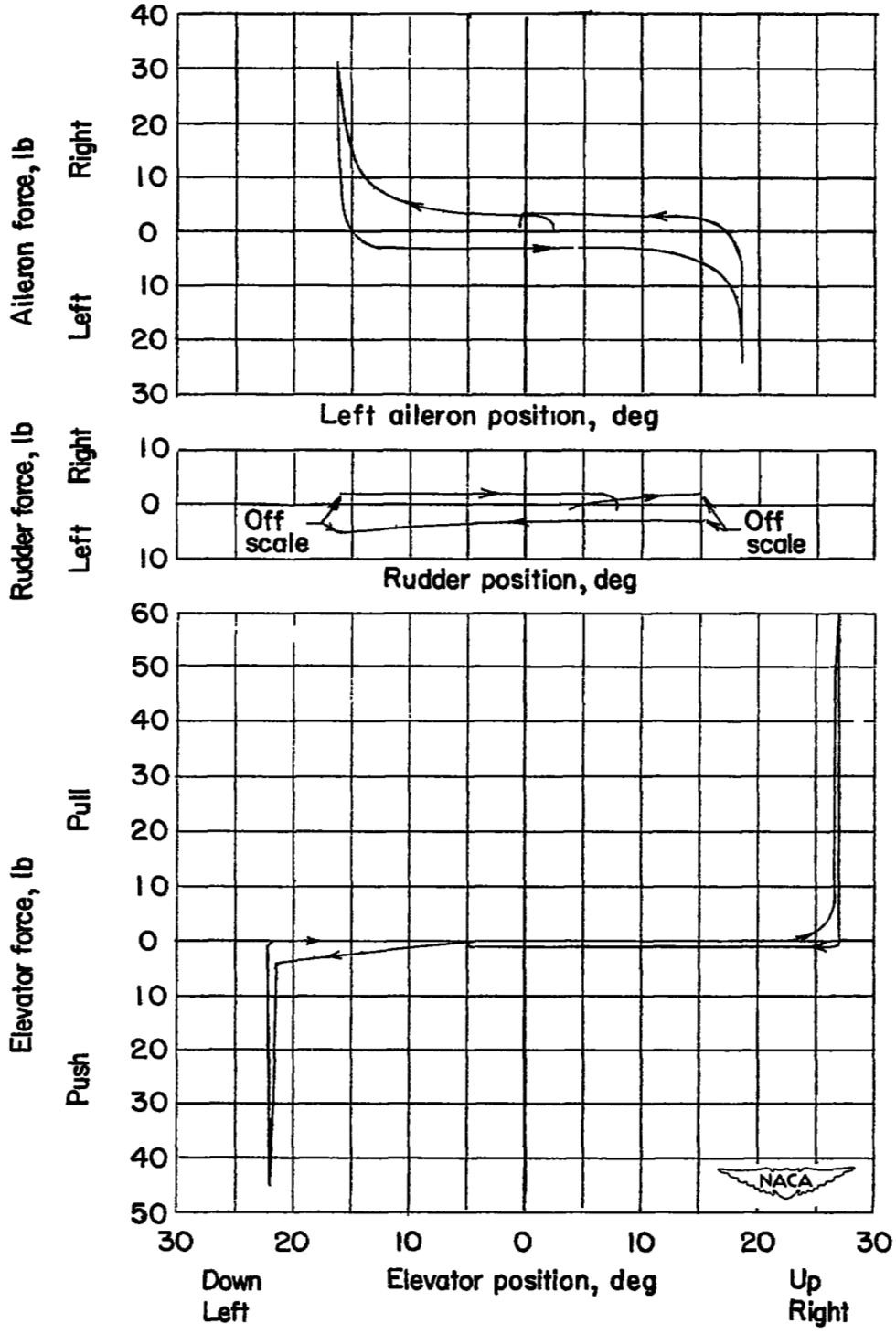

Figure 3.- Forces required to deflect controls on the ground under no load.

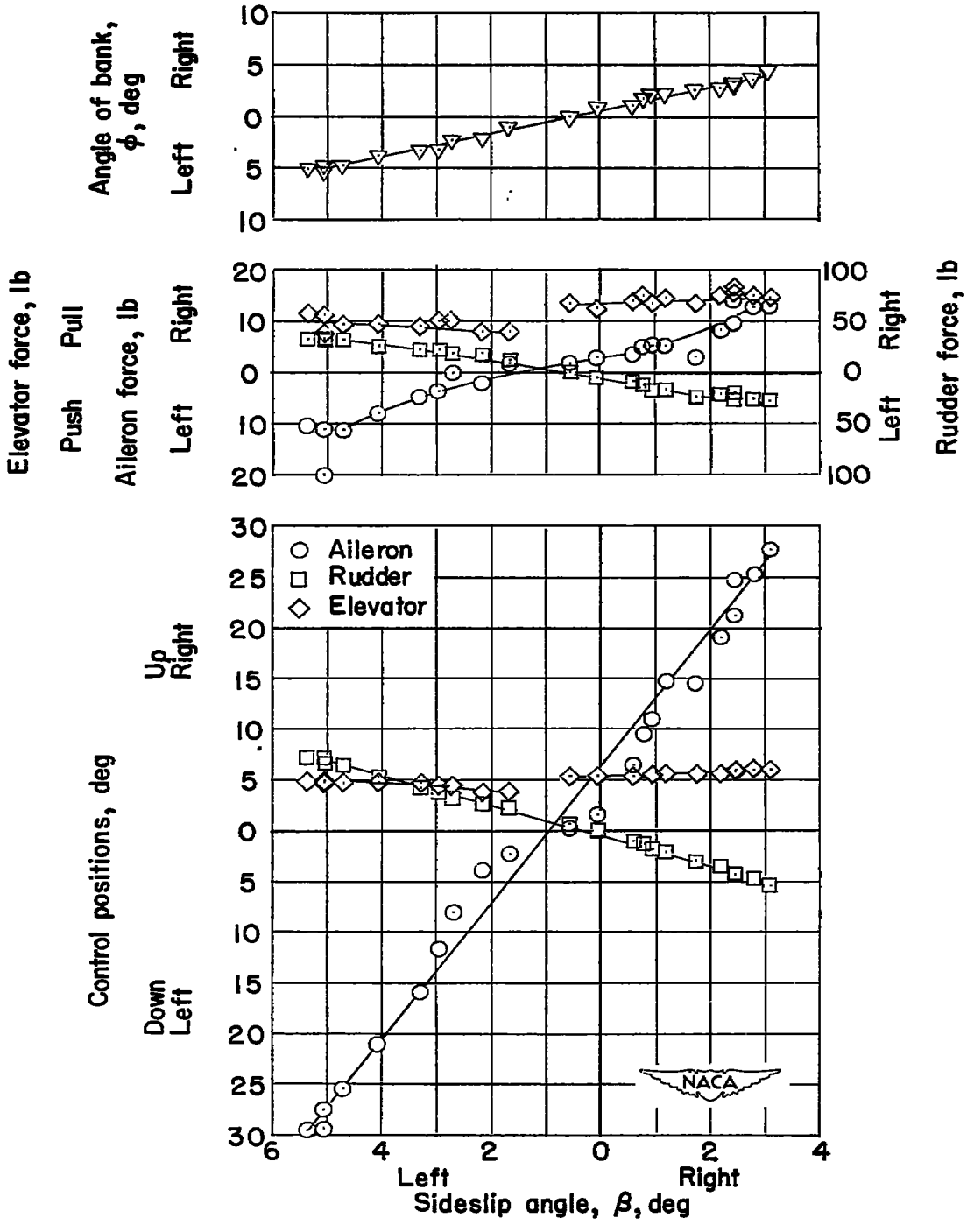

(a) M = 0.62; $h_p \approx 40{,}000$ feet.

Figure 4.- Sideslip characteristics of Bell X-5 research airplane.

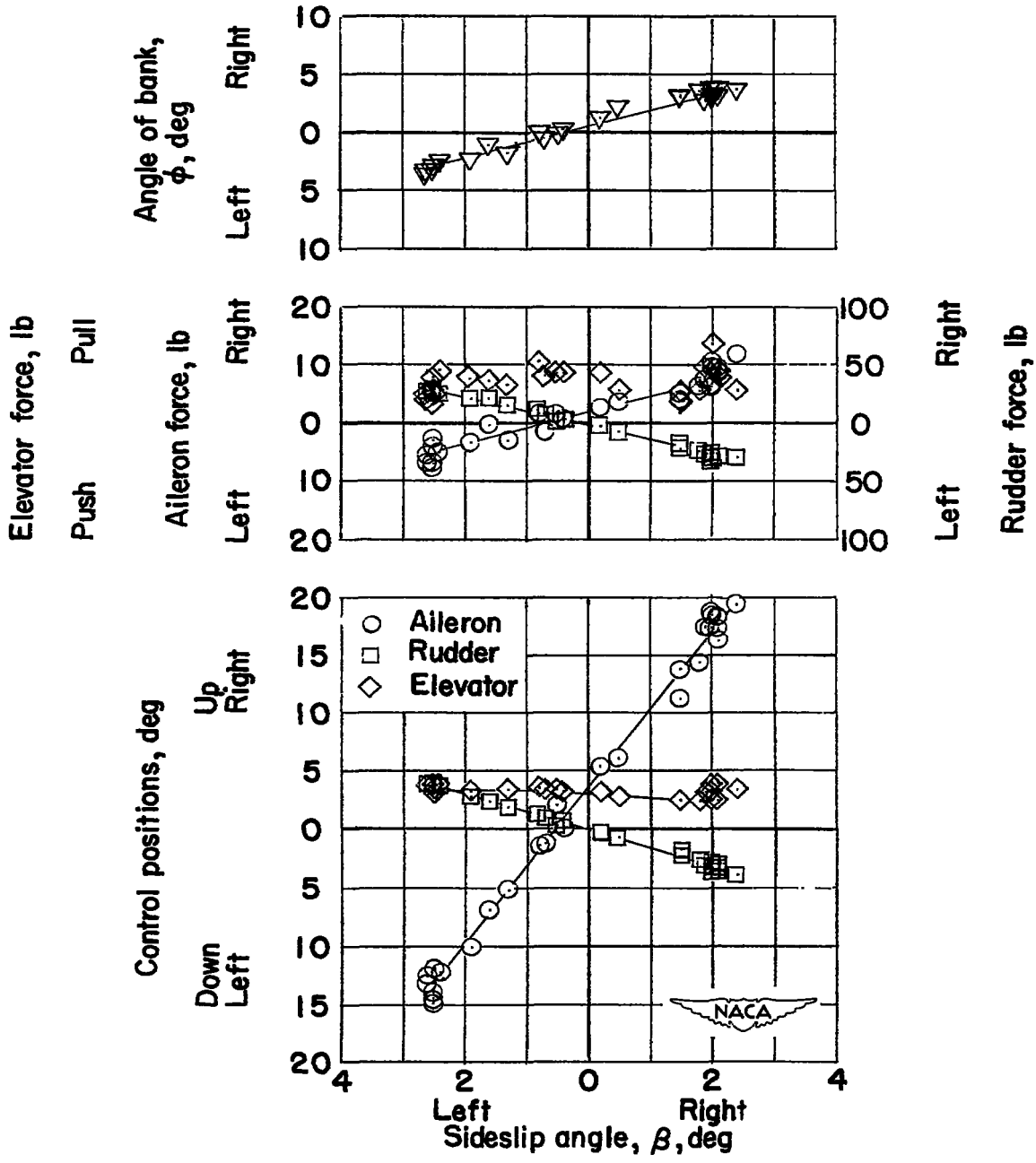

(b) $M = 0.70$; $h_p \approx 40{,}000$ feet.

Figure 4.- Continued.

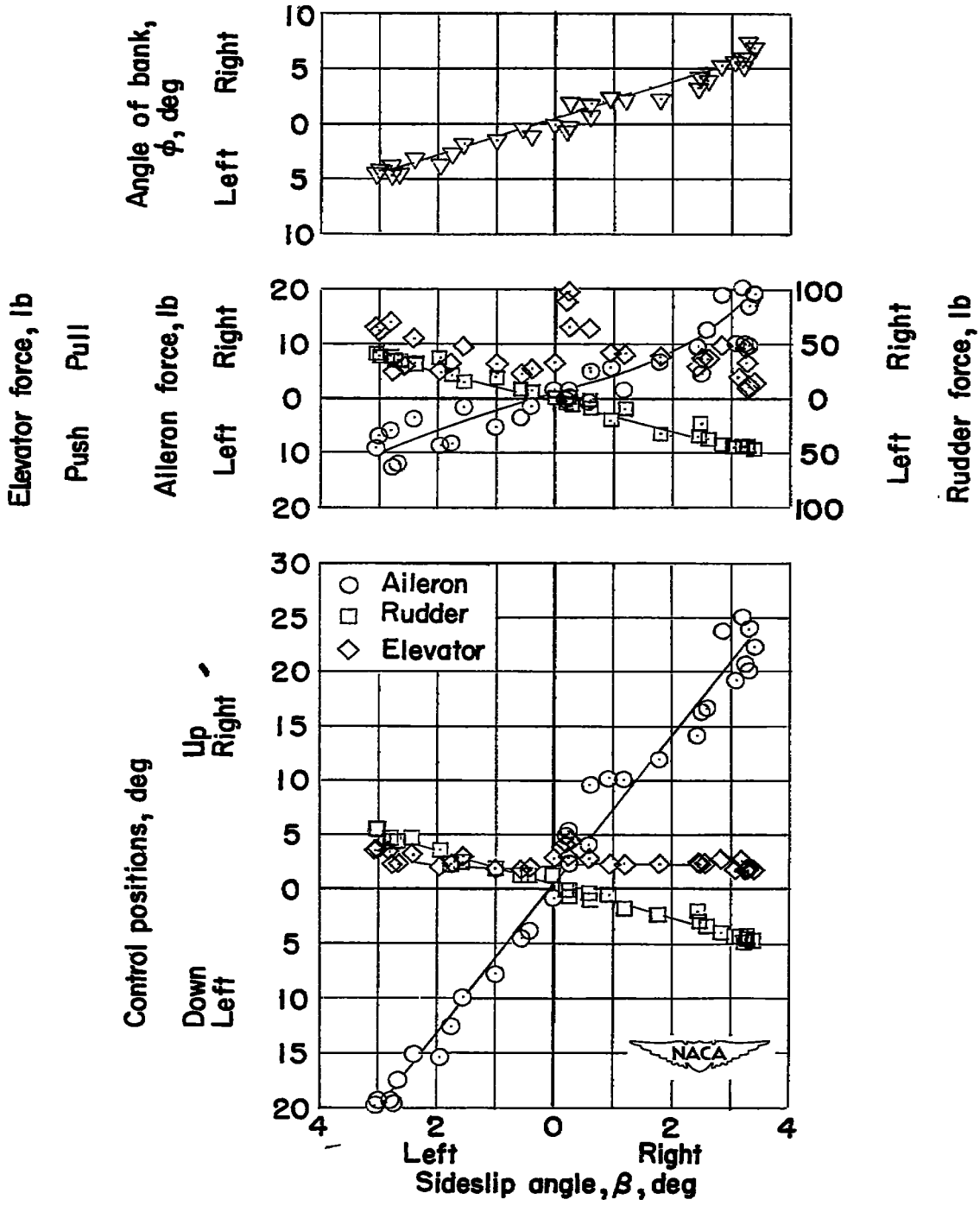

(c) M = 0.76; $h_p \approx 40{,}000$ feet.

Figure 4.- Continued.

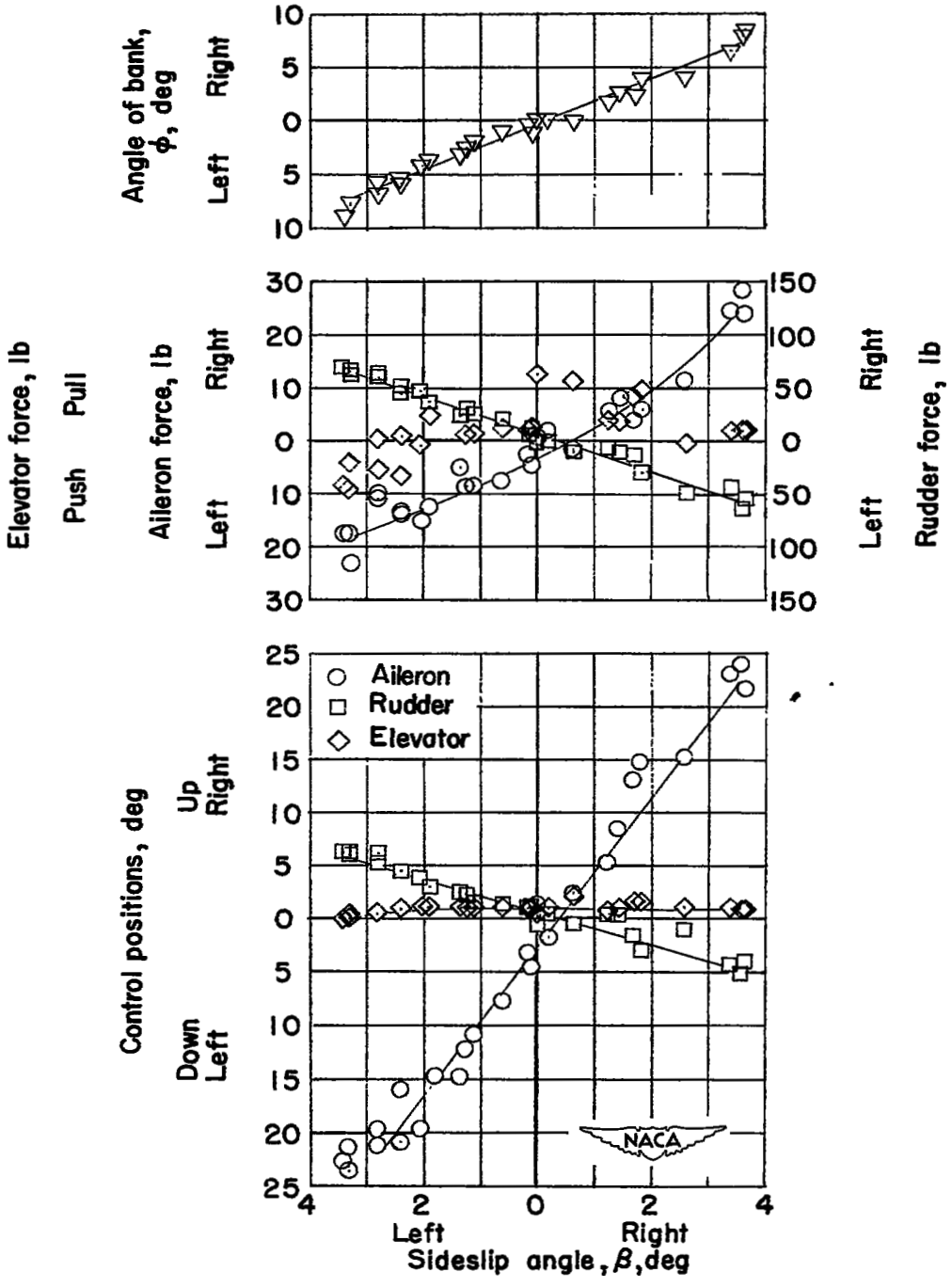

(d) M = 0.81; $h_p \approx 39{,}000$ feet.

Figure 4.- Continued.

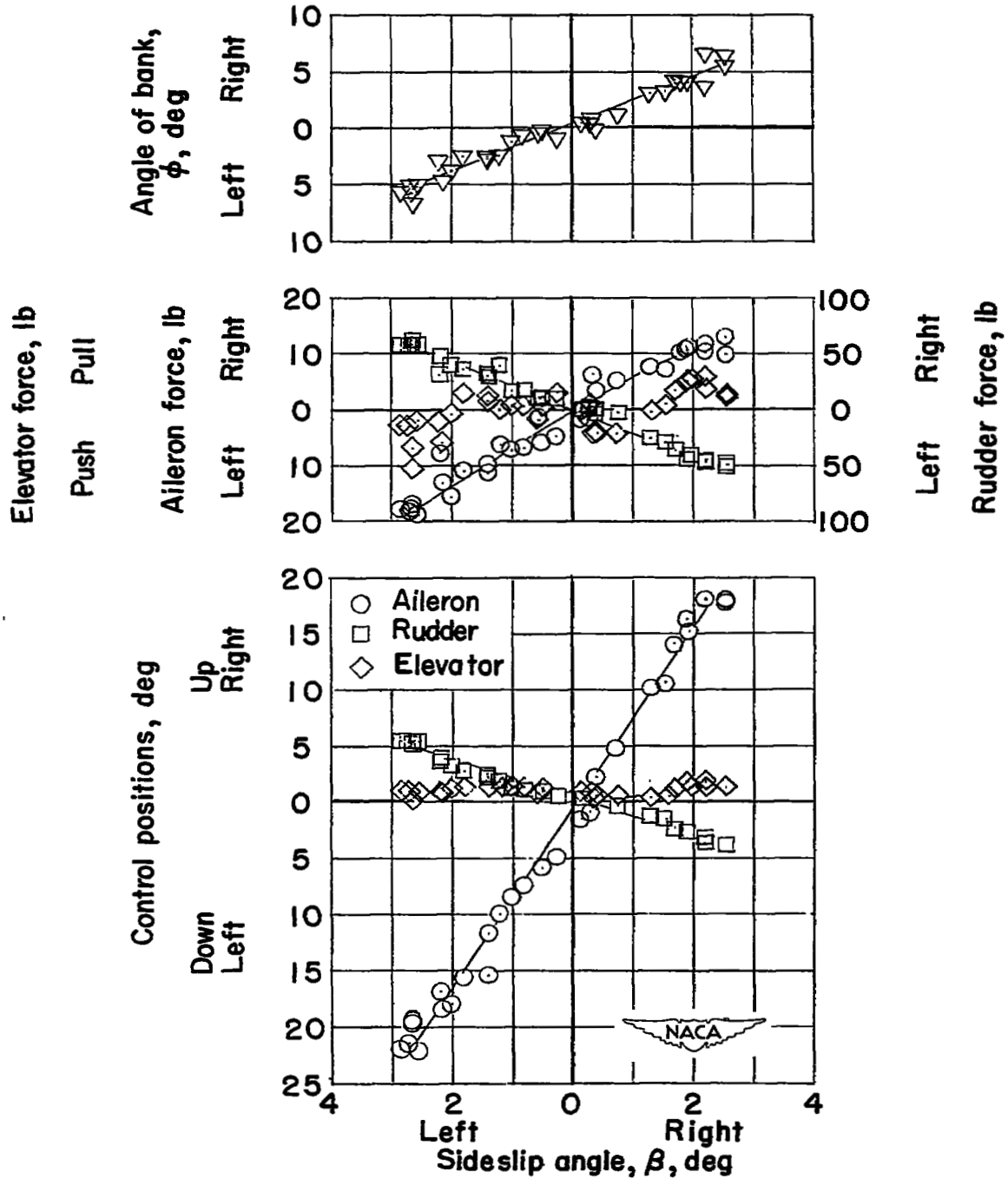

(e) $M = 0.85$; $h_p \approx 40{,}000$ feet.

Figure 4.- Continued.

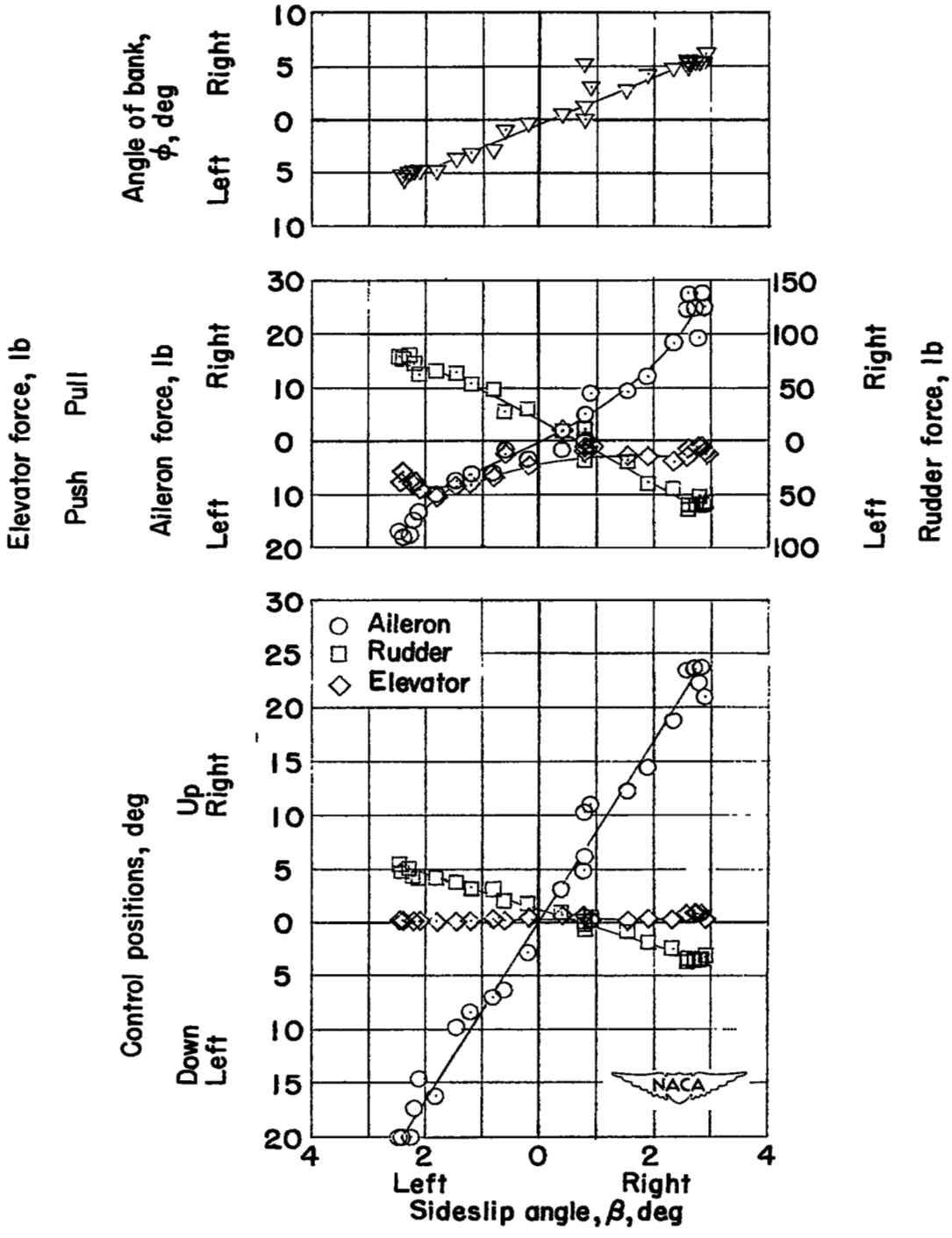

(f) $M = 0.89$; $h_p \approx 40{,}000$ feet.

Figure 4.- Continued.

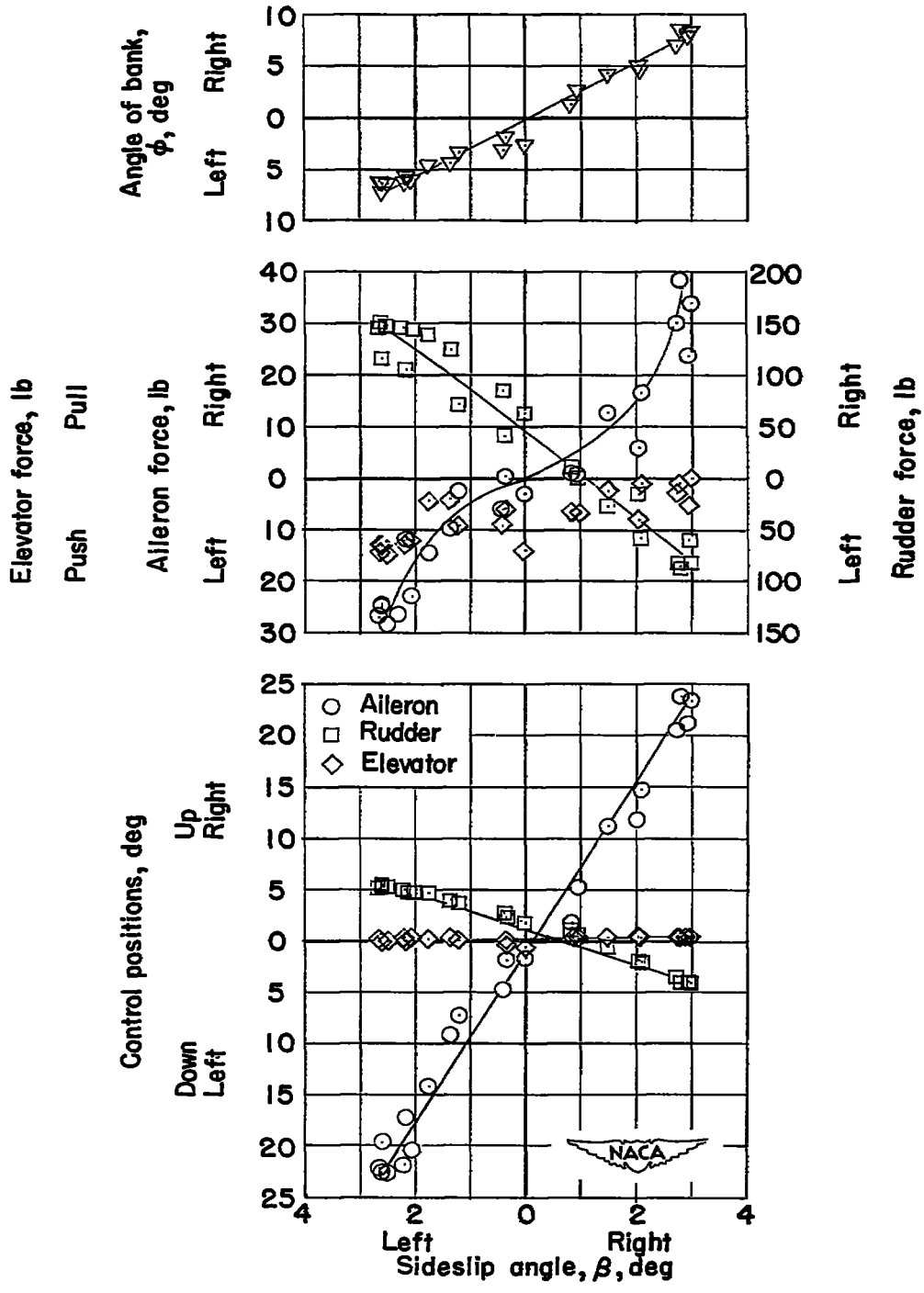

(g) M = 0.91; $h_p \approx 36{,}000$ feet.

Figure 4.- Continued.

[redacted]

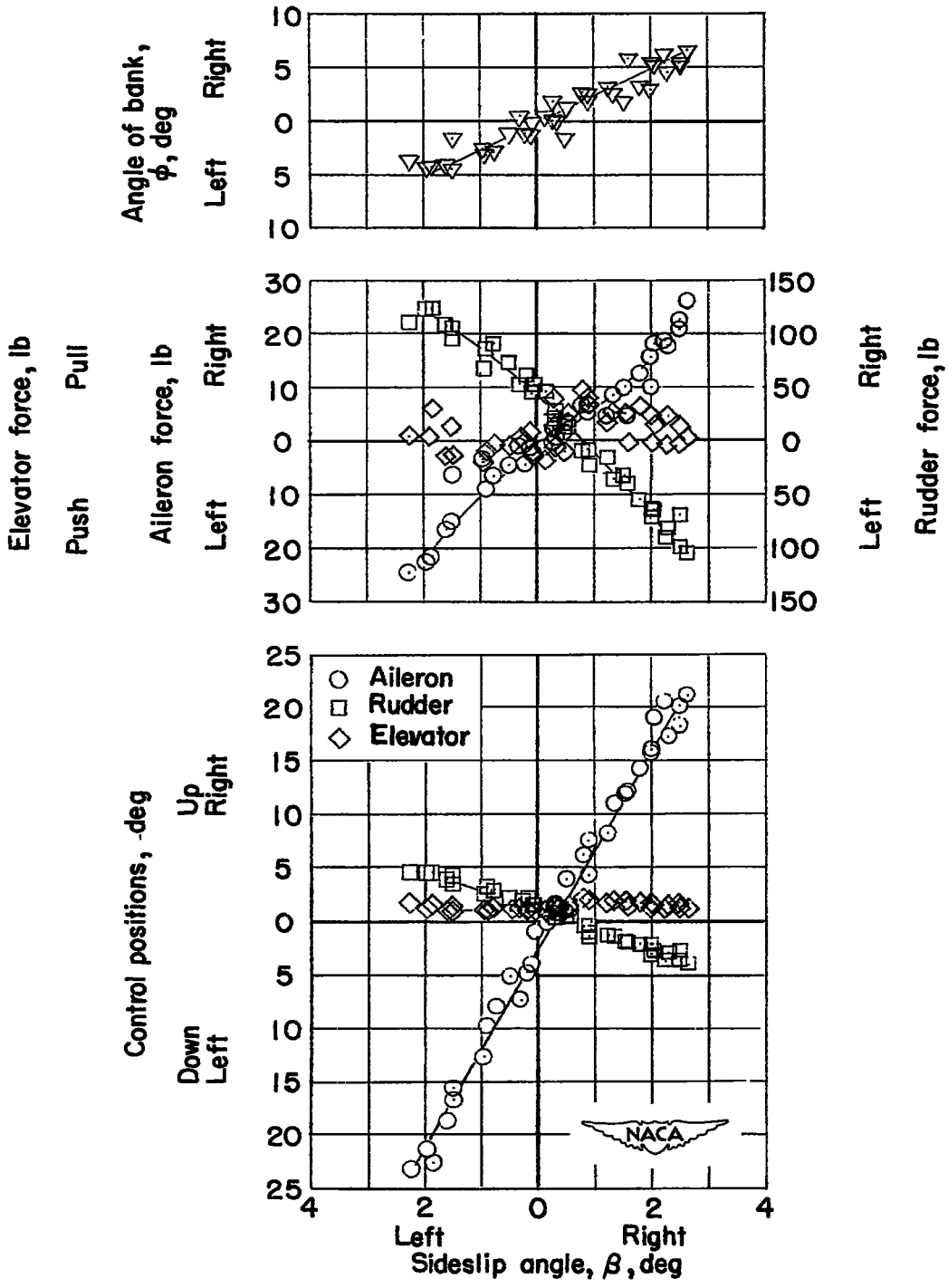

(h) $M = 0.94$; $h_p \approx 40{,}000$ feet.

Figure 4.- Continued.

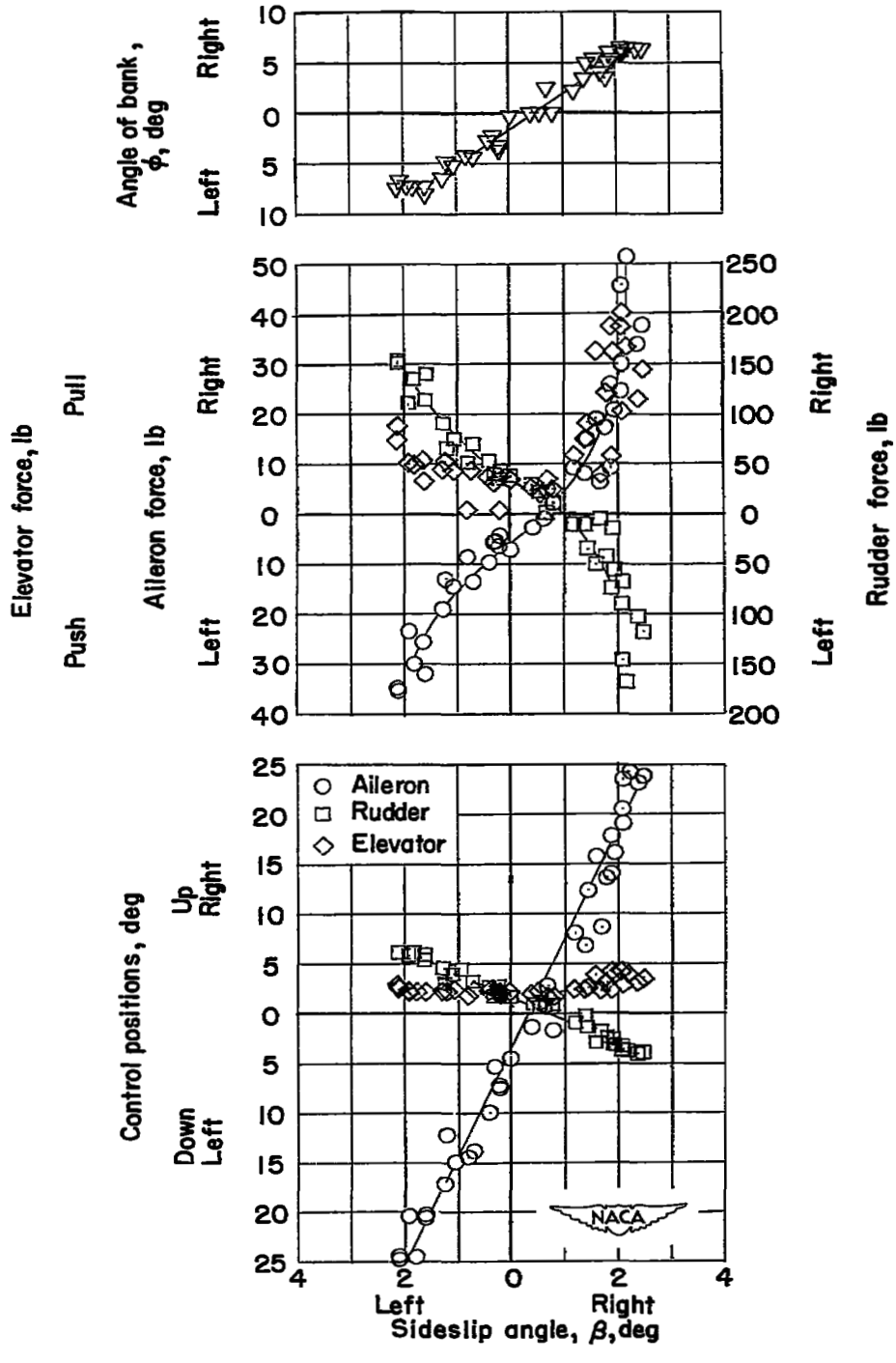

(i) M = 0.96; $h_p \approx 37{,}000$ feet.

Figure 4.- Continued.

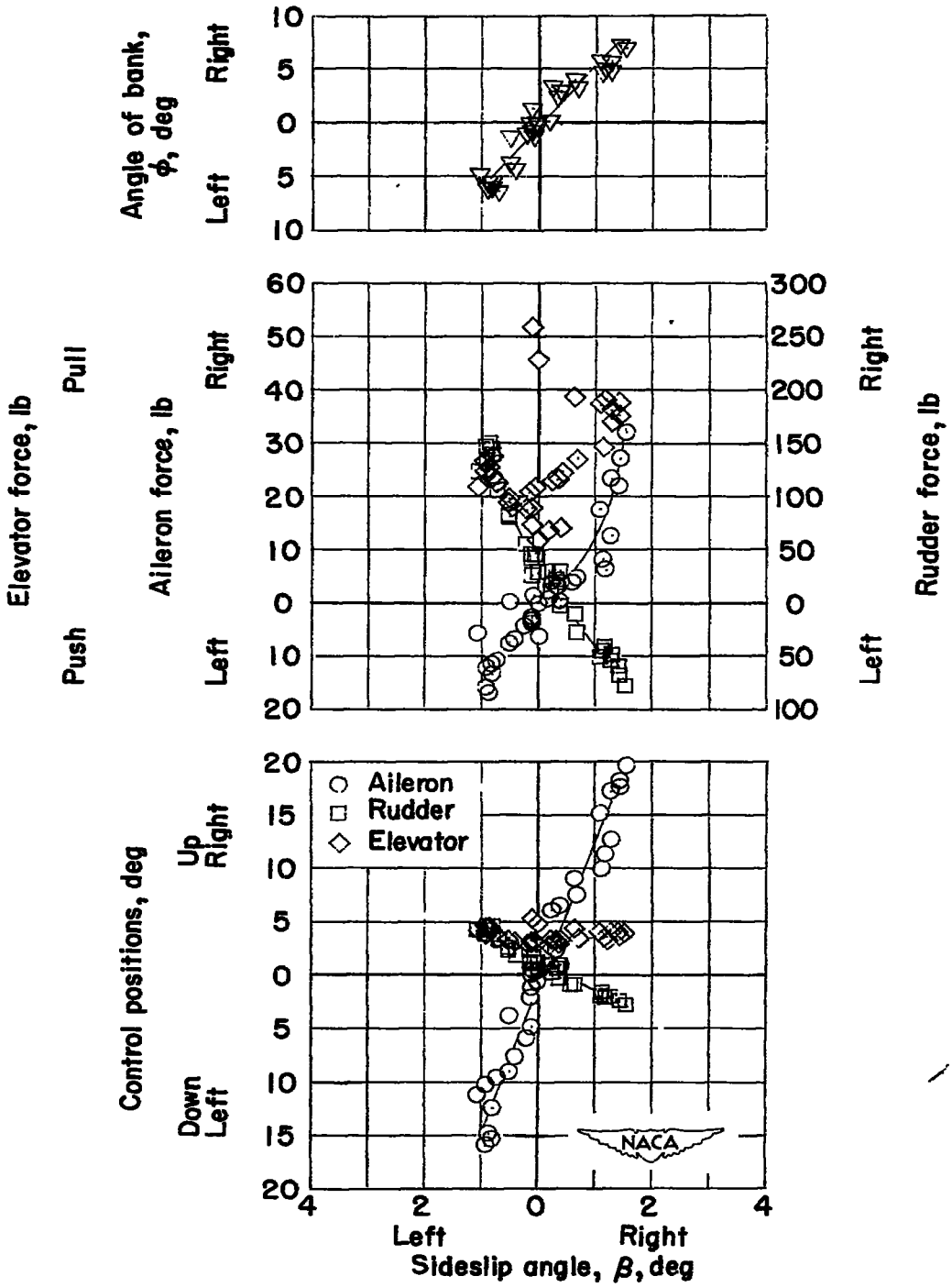

(j) M = 0.96; $h_p \approx 35{,}000$ feet.

Figure 4.- Continued.

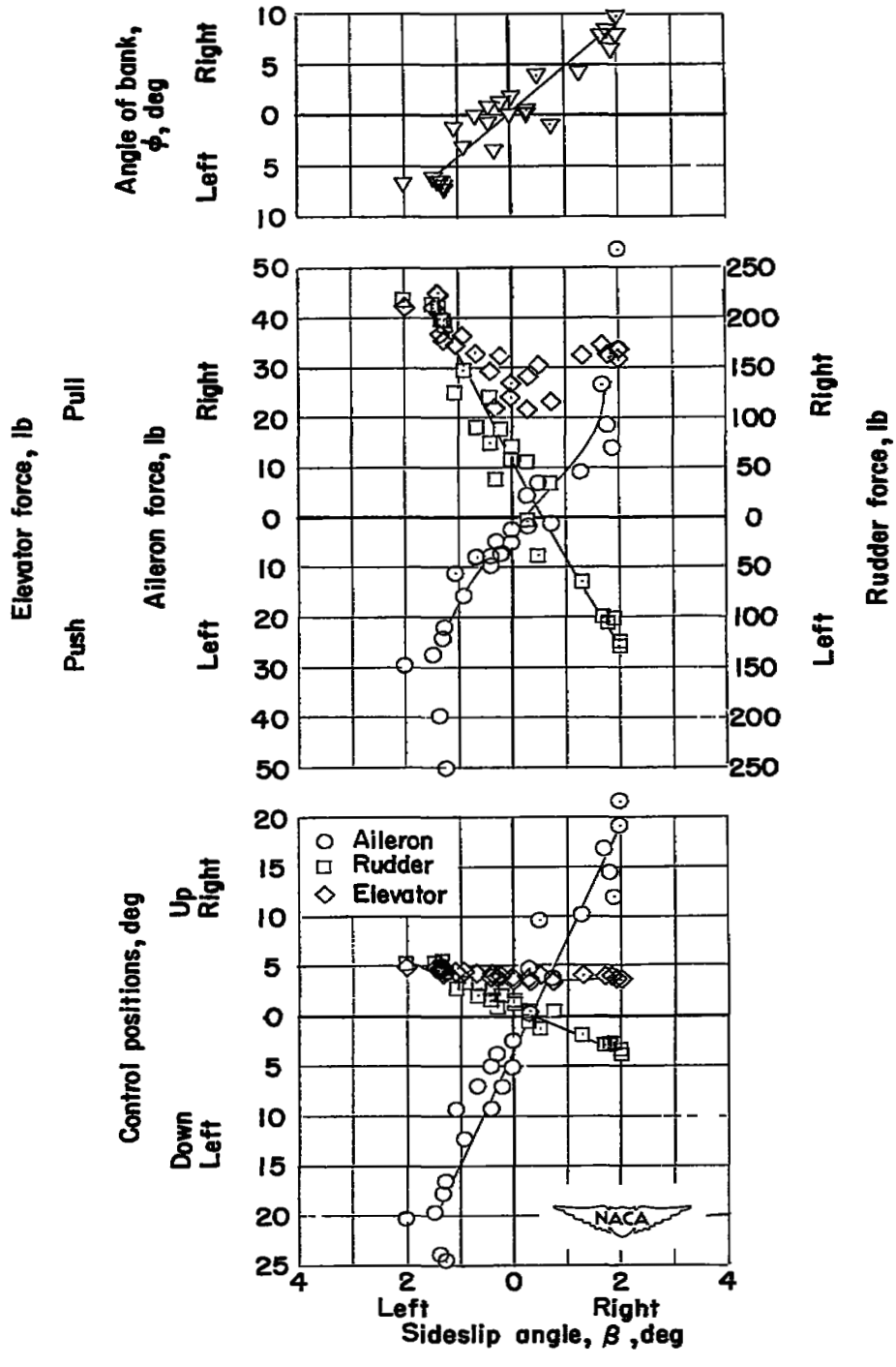

(k) M = 0.97; $h_p \approx 36{,}000$ feet.

Figure 4.- Concluded.

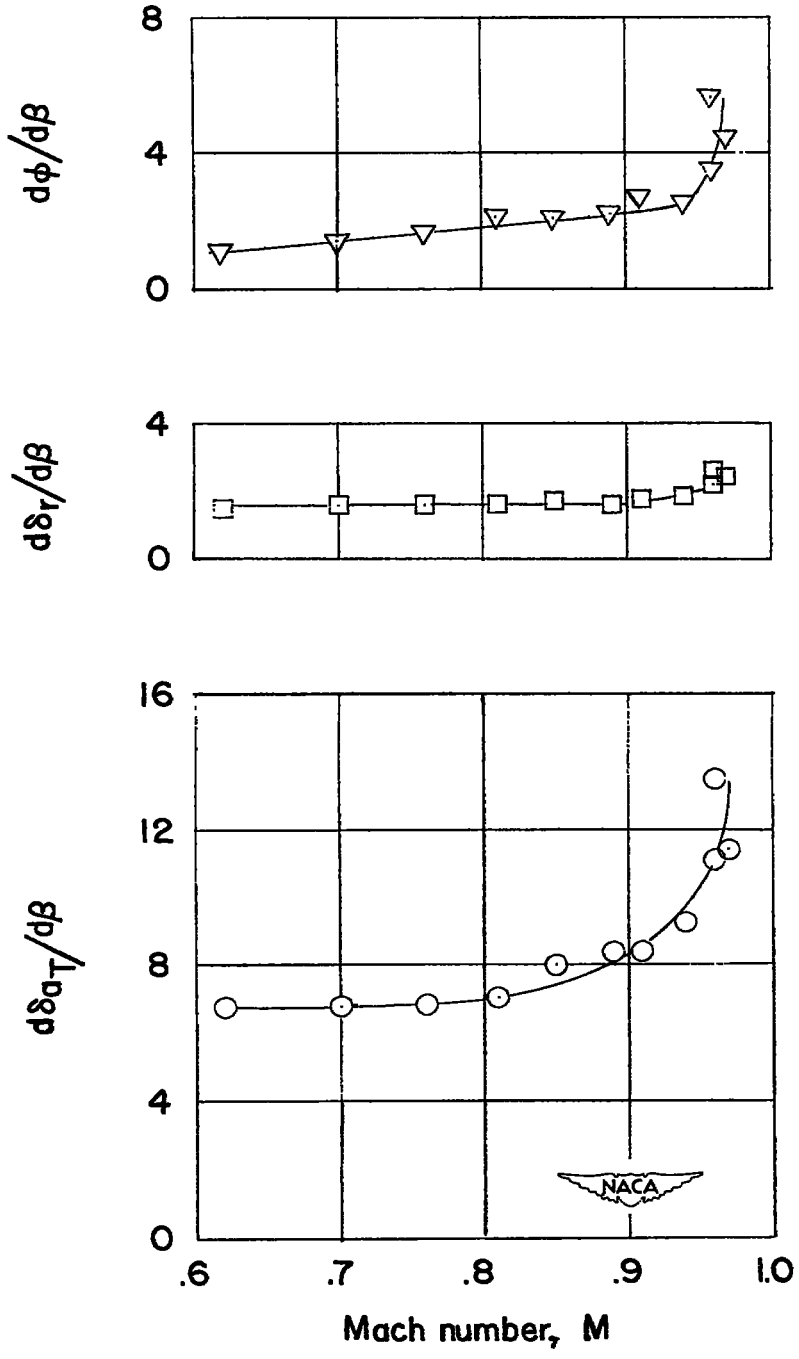

Figure 5.- Variations of $d\varphi/d\beta$, $d\delta_r/d\beta$, and $d\delta_{a_T}/d\beta$ with M as measured in steady sideslips with Bell X-5 research airplane. h_p = 35,000 to 40,000 feet.

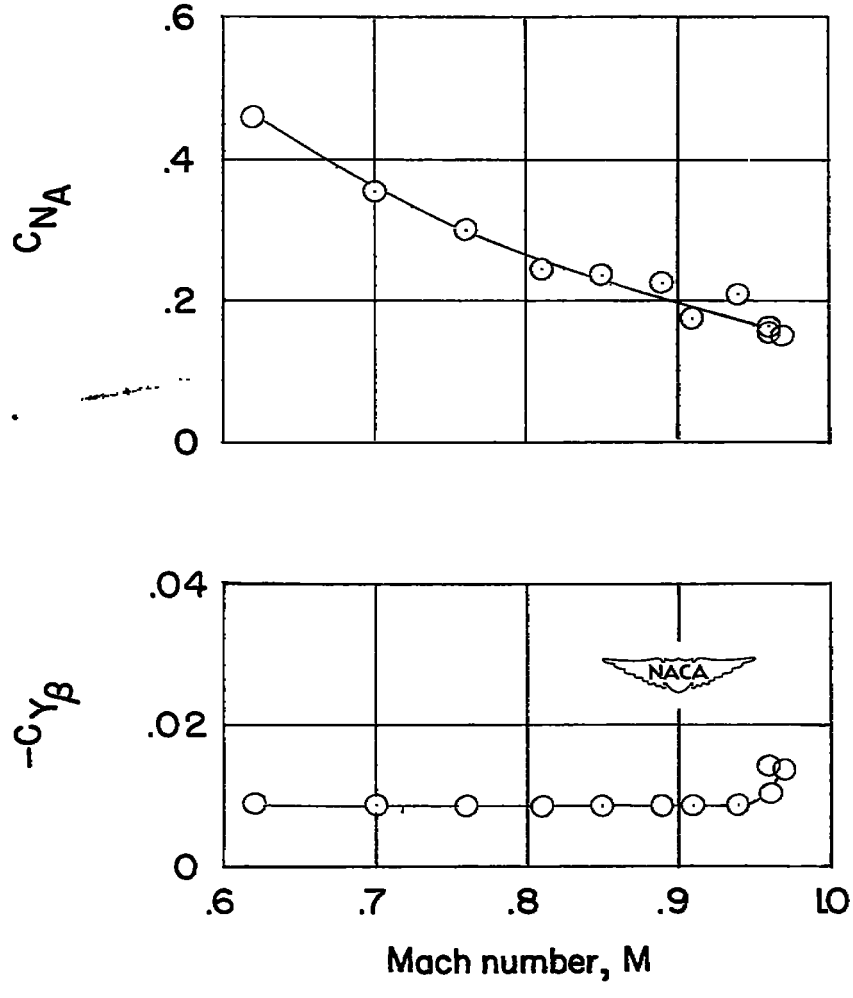

Figure 6.- Variations of C_{N_A} and C_{Y_β} with M as measured in steady sideslips with Bell X-5 research airplane. h_p = 35,000 to 40,000 feet.

NACA-Langley - 2-11-53 - 325

SECURITY INFORMATION

NASA Technical Library

3 1176 01436 9715

[redacted]