(1A)

LIBRARY NACA - HSFS

Copy 131
RM No. L8I28

NACA RM No. L8I28

RESEARCH MEMORANDUM

CLASSIFICATION CHANGED
DECL. PA #1
TO
SEP 17 1958
BY AUTHORITY OF

RESULTS OBTAINED DURING EXTENSION OF U. S. AIR FORCE TRANSONIC-FLIGHT TESTS OF XS-1 AIRPLANE

By Harold R. Goodman and Hubert M. Drake

Langley Aeronautical Laboratory
Langley Field, Va.

CLASSIFICATION CHANGED

To CONFIDENTIAL

NACA Release Form No. 490

By authority of Hugh L. Dryden Date May 15, 1951

CLASSIFIED DOCUMENT

This document contains classified information affecting the National Defense of the United States within the meaning of the Espionage Act, USC 50:31 and 32. Its transmission or the revelation of its contents in any manner to an unauthorized person is prohibited by law.
Information so classified may be imparted only to persons in the military and naval services of the United States, appropriate civilian officers and employees of the Federal Government who have a legitimate interest therein, and to United States citizens of known loyalty and discretion who of necessity must be informed thereof.

NATIONAL ADVISORY COMMITTEE FOR AERONAUTICS

WASHINGTON
November 16, 1948

LIBRARY [redacted] HSFS

NATIONAL ADVISORY COMMITTEE FOR AERONAUTICS

RESEARCH MEMORANDUM

RESULTS OBTAINED DURING EXTENSION OF U. S. AIR FORCE TRANSONIC-FLIGHT TESTS OF XS-1 AIRPLANE

By Harold R. Goodman and Hubert M. Drake

SUMMARY

Limited data covering extension of the U. S. Air Force transonic-flight tests of the XS-1 airplane are presented. These data show that successful flight to a Mach number of 1.35 has been achieved at altitudes above 40,000 feet. Longitudinal trim changes were experienced to the highest Mach numbers attained, with the wheel forces remaining small and the pilot able to control the airplane with ease. The airplane becomes right-wing heavy above a Mach number of 0.8 but can be trimmed with the aileron. No aileron buzz or flutter phenomena have been encountered. Buffeting has been light, when encountered in the range of Mach number and lift coefficient covered by these data.

INTRODUCTION

As part of an accelerated transonic-flight research program, the XS-1 airplane with an 8-percent-thick wing and a 6-percent-thick horizontal tail has been utilized by the U. S. Air Force, Wright Field Flight Test Division, to attain flight at speeds greater than the speed of sound. The intent is not to make detailed investigations, but to make as large a Mach number increase in successive flights as is consistent with safety. In this cooperative program between the Wright Field Flight Test Division and the NACA, the flying is done by a Flight Test Division pilot, and the data reduction and analysis are made from NACA instruments by NACA personnel.

Previous reports (see references 1 and 2) have covered more intensively the flight tests of the XS-1 airplane from a Mach number of 0.71 to a Mach number of 1.15. This report presents limited data on the extension of Air Force flights of the XS-1 airplane to a Mach number of 1.35 at an altitude of 49,000 feet.

SYMBOLS

M''	Mach number uncorrected for position error
M'	Mach number corrected for error in measurement of static pressure but uncorrected for the theoretical loss in total head behind a detached bow wave
M	Mach number corrected for error in measurement of static pressure and for the theoretical loss in total head behind a detached bow wave
q''	dynamic pressure, pounds per square foot $\left(\frac{\gamma}{2}p''M''^2\right)$
q'	dynamic pressure, pounds per square foot $\left(\frac{\gamma}{2}p'M'^2\right)$
q	dynamic pressure, pounds per square foot $\left(\frac{\gamma}{2}pM^2\right)$
n	normal acceleration, gravitational units
W	airplane weight
C_{n_a}''	airplane normal-force coefficient $(nW/q''S)$
C_{n_a}'	airplane normal-force coefficient $(nW/q'S)$
C_{n_a}	airplane normal-force coefficient (nW/qS)
i_t	stabilizer incidence, degrees
δ_e	elevator position, degrees
δ_s	stabilizer position, degrees
F_e	elevator wheel force, pounds
δ_a	aileron position, degrees

H'' pressure altitude, uncorrected for position error, feet

H pressure altitude, corrected for error in measurement of static pressure, feet

AIRPLANE DESCRIPTION

The XS-1 airplane utilized in the U. S. Air Force transonic-flight tests incorporates an 8-percent-thick wing and a 6-percent-thick horizontal tail. The power plant is a Reaction Motors, Inc. model 6000 C-4 rocket engine, using diluted ethyl alcohol as fuel and liquid oxygen as oxidizer. The dimensions of the airplane are shown in figure 1.

Flight conditions of the airplane are as follows:

Launching:	
Weight, pounds	12,365
Center-of-gravity position, percent M.A.C.	22.1
End of powered flight:	
Weight, pounds	7800
Center-of-gravity position, percent M.A.C.	19.6
Landing:	
Weight, pounds	7115
Center-of-gravity position, percent M.A.C.	25.3
Fuel consumption per rocket, pounds per second per cylinder	7.87
Rated rocket thrust, pounds per cylinder	1500

Values of weight and, therefore, center-of-gravity location are difficult to ascertain precisely because of the rapid rate of propellant consumption. The values given in this report are accurate to ± 0.2 percent mean aerodynamic chord.

INSTRUMENTATION

Measurements of airspeed, altitude, normal acceleration, elevator position, shear and bending moment on the right horizontal tail, and bending moment on the right wing are recorded internally on standard NACA instruments. In addition, measurements of right-aileron position, stabilizer position, elevator wheel force, altitude, airspeed, and

normal acceleration are telemetered to a ground receiving station and recorded on a Consolidated oscillograph. In cases of duplication of data, the data obtained from the internal instruments are presented in the results. Reference 1 presents a comparison of the telemetered and recorded results.

TEST RESULTS AND DISCUSSION

A calibration of the airspeed installation was made, utilizing the radar tracking method described in reference 3. The calibration is shown in figure 2.

A time history of a climb to 41,000 feet, and a speed run at this altitude, is presented in figure 3. A pull-up was made at the end of this run at an uncorrected Mach number of 1.08. The variation of wheel force and elevator deflection are considerably larger than those encountered in making similar maneuvers at lower Mach numbers as reported in reference 4. Very light buffeting was encountered in the range of normal-force coefficients and Mach numbers covered. The irregularities in the measured values indicated in the time period of 214 to 218 seconds are probably due to actuation of the stabilizer. No data of the stabilizer position were obtained during this period, but recorded values of stabilizer position preceding the times shown and at times after 225 seconds show that the stabilizer had been moved from 0.5° to 2.0° incidence.

Figure 4 shows a time history of measured quantities during a climb to 52,000 feet and a shallow dive to 49,000 feet. A pull-up was started at an uncorrected Mach number of 1.25 and completed at an uncorrected Mach number of 1.12. The stick-force gradient was about the same as in figure 3. The pilot stated that the ailerons remained effective to the maximum Mach number attained. Very mild buffeting was encountered in the range of normal-force coefficients and Mach numbers covered in these data.

Figure 5 shows the variation of several measured quantities with corrected Mach number at constant lift coefficients of 0.24 and 0.40. In general, the variations of elevator position and elevator force are similar to those reported in references 1 and 2. These data cover a Mach number range through which the airplane was not in stabilized flight at any one Mach number. The data, therefore, do not present the actual variation of airplane trim position within the presented Mach number range. A qualitative analysis can be made, and there appears to be a change in trim in the nose-up direction

between Mach numbers of 0.91 and 1.2. At higher Mach numbers, there appears to be a slight nose-down change in trim which continues to the maximum Mach number attained. The pilot changed the stabilizer position during the flight to minimize the effects of the changes of trim.

Figure 6 shows the variation of right aileron angle with Mach number as compared with similar data from reference 2. Because the airplane is not instrumented to measure rolling velocity, the data may include points at which the airplane was rolling or at which the airplane was laterally out of trim which may account for the scatter. There is, however, a definite indication of airplane right-wing heaviness. No aileron buzz or other flutter phenomena have been encountered in the Mach number range covered.

CONCLUSIONS

The limited data obtained in the extension of transonic flight to a Mach number of 1.35 at altitudes above 40,000 feet indicate:

1. Satisfactory extension of flight of the XS-1 airplane to a Mach number of 1.35 has been achieved.

2. Longitudinal trim changes have been experienced up to the highest Mach number attained, but wheel forces have been small. The pilot was able to control the airplane with ease.

3. The airplane becomes right-wing heavy above a Mach number of 0.8 but can be trimmed with the ailerons.

4. Buffeting has been light, when encountered in the range of Mach number and lift coefficient covered by these data.

5. No aileron buzz or flutter phenomena have been encountered.

Langley Aeronautical Laboratory
National Advisory Committee for Aeronautics
Langley Field, Va.

Harold R. Goodman
Aeronautical Engineer

Hubert M. Drake
Aeronautical Research Scientist

Approved: Hartley A. Soulé
Hartley A. Soulé
Assistant Chief of Research

MLE

REFERENCES

1. Drake, Hubert M., McLaughlin, Milton D., and Goodman, Harold R.: Results Obtained during Accelerated Transonic Flight Tests of the Bell XS-1 Airplane in Flights to a Mach Number of 0.92. NACA RM No. L8A05a, 1948.

2. Williams, W. C., and Beeler, De E.: Results of Preliminary Flight Tests of the XS-1 Airplane (8-Percent Wing) to a Mach Number of 1.25. NACA RM No. L8A23a, 1948.

3. Zalovcik, John A., and Wood, Clotaire: Static-Pressure Error of an Airspeed Installation on an Airplane in High-Speed Dives and Pull-Outs. NACA RB No. L5K29a, 1946.

4. Williams, Walter C., Forsyth, Charles M., and Brown, Beverly P.: General Handling-Qualities Results Obtained during Acceptance Flight Tests of the Bell XS-1 Airplane. NACA RM No. L8A09, 1948.

INDEX

Subject	Number
Mach Number Effects - Complete Wings	1.2.2.6
Airplanes - Specific Types	1.7.1.2
Stability, Longitudinal - Static	1.8.1.1.1
Flying Qualities	1.8.5

ABSTRACT

Contains limited data on flights to a Mach number of 1.35 at altitudes above 40,000 feet on the XS-1 airplane with 8-percent-thick wing. Data are presented showing longitudinal and lateral trim changes and an airspeed calibration.

SECRET

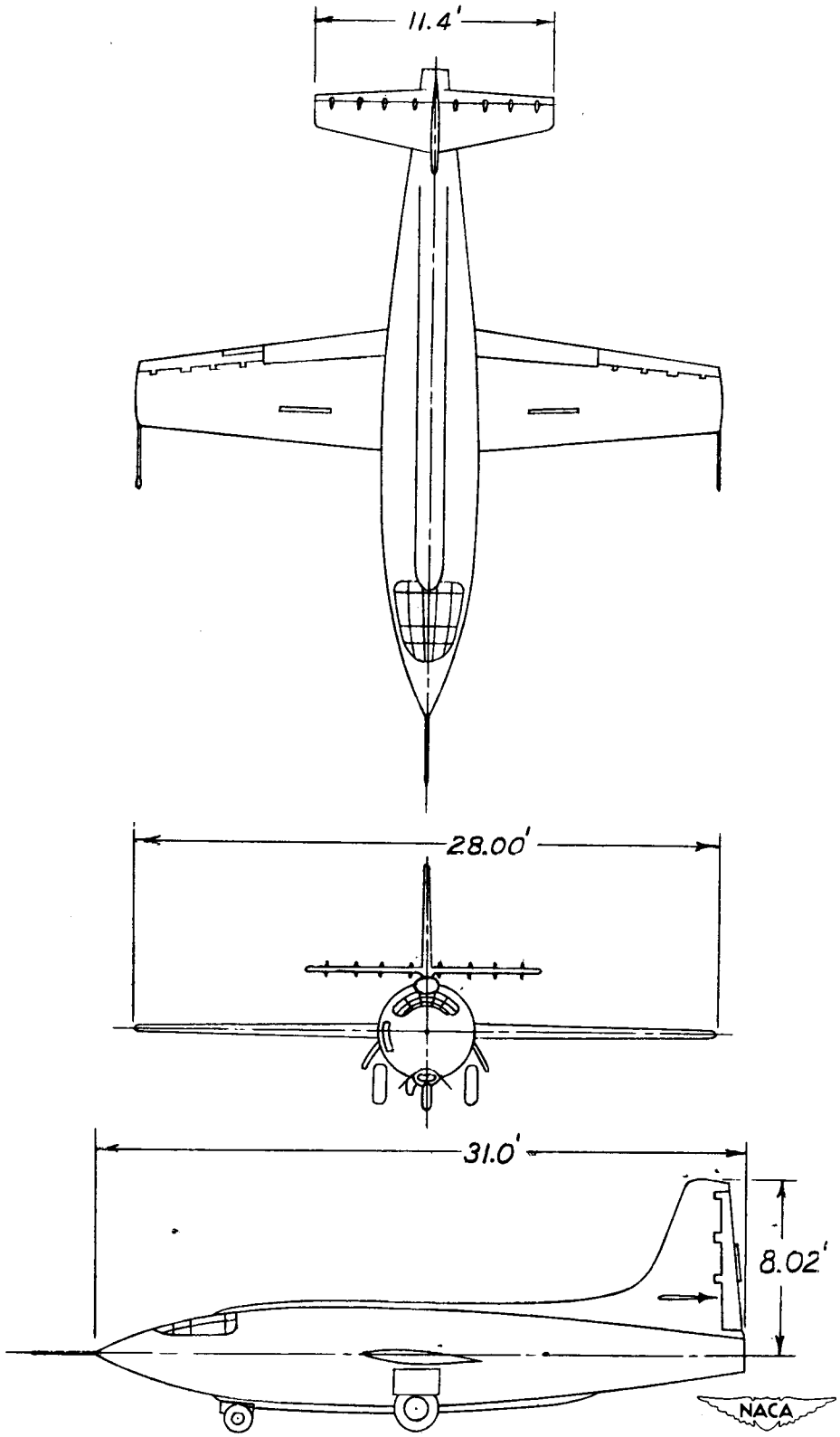

Figure 1.- Three-view drawing. XS-1 airplane.

SECRET

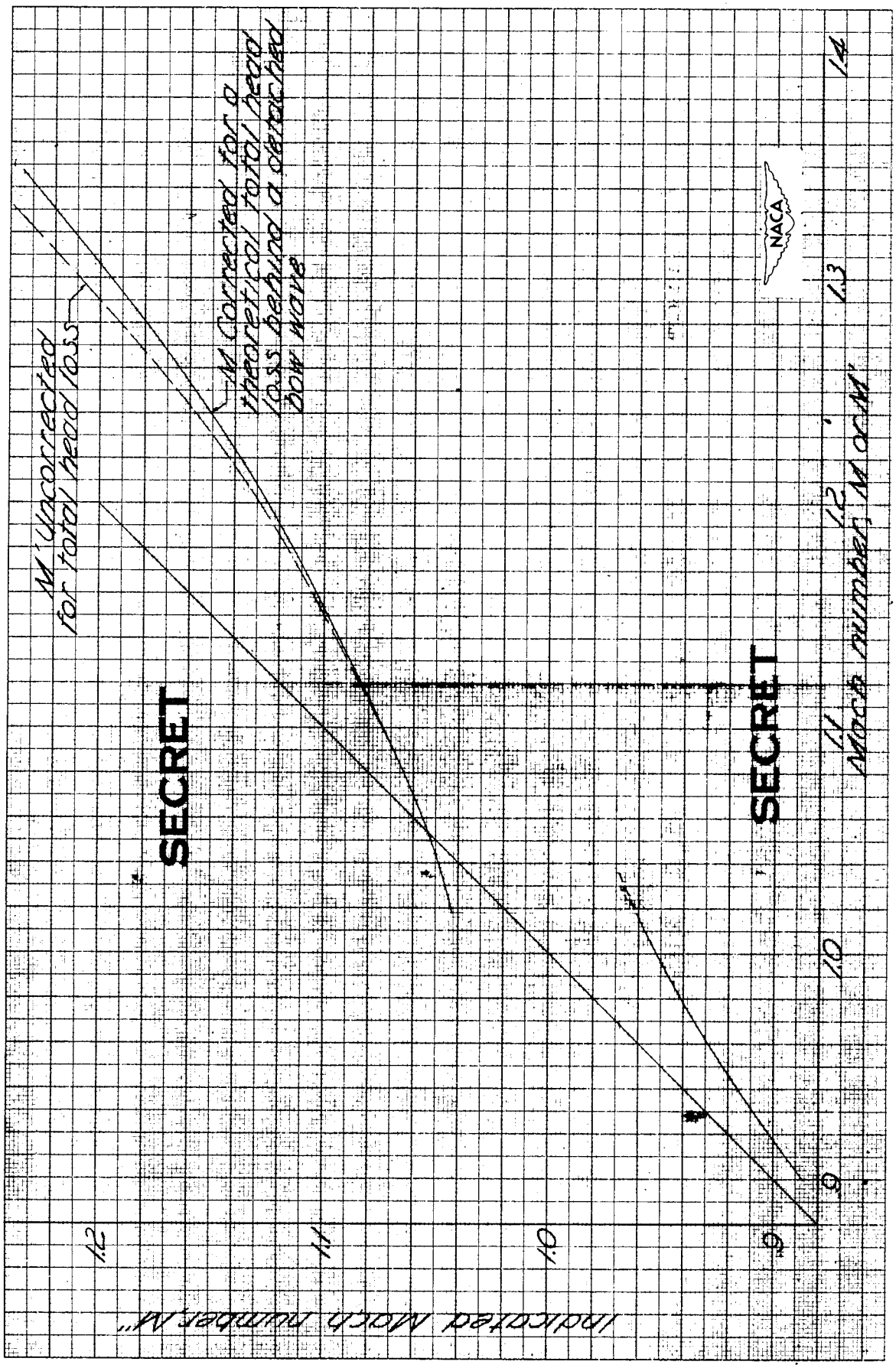

Figure 2.- Airspeed calibration of XS-1 airplane. 8-percent wing.

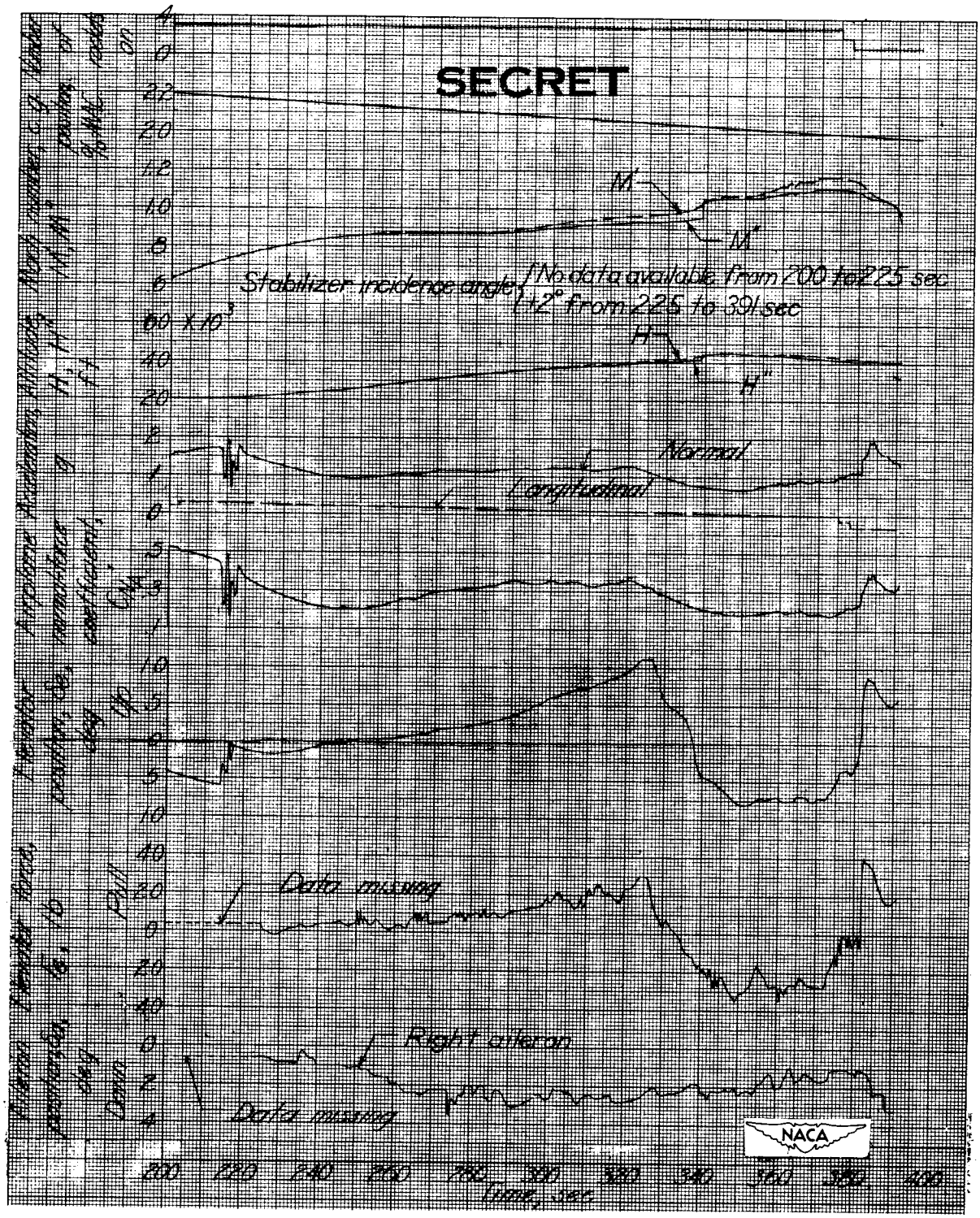

Figure 3.- Time history of measured quantities during speed run. Flight 15. Air-force tests. XS-1 airplane. 8-percent wing.

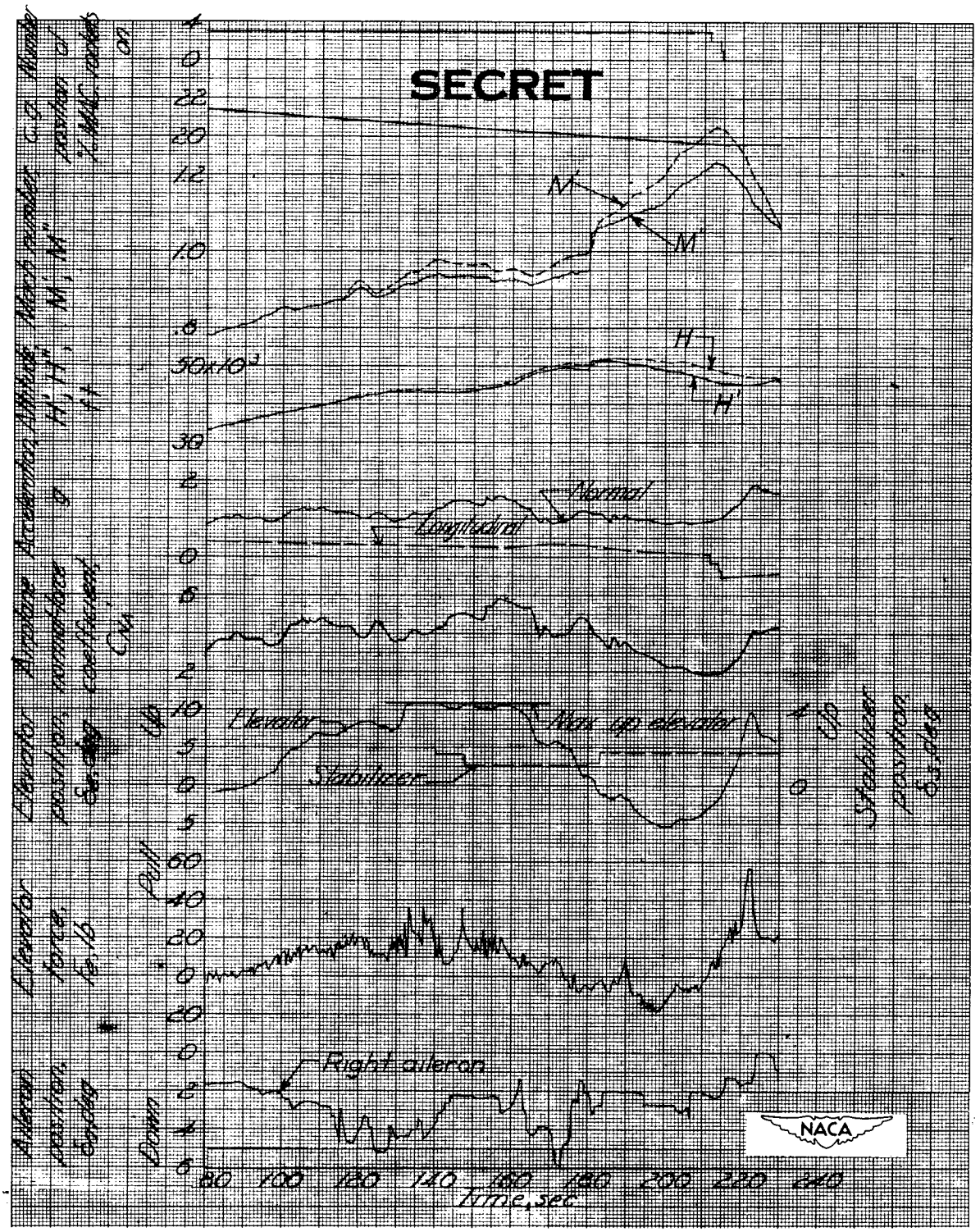

Figure 4.- Time history of measured quantities during speed run. Flight 16. Air-force tests. XS-1 airplane. 8-percent wing.

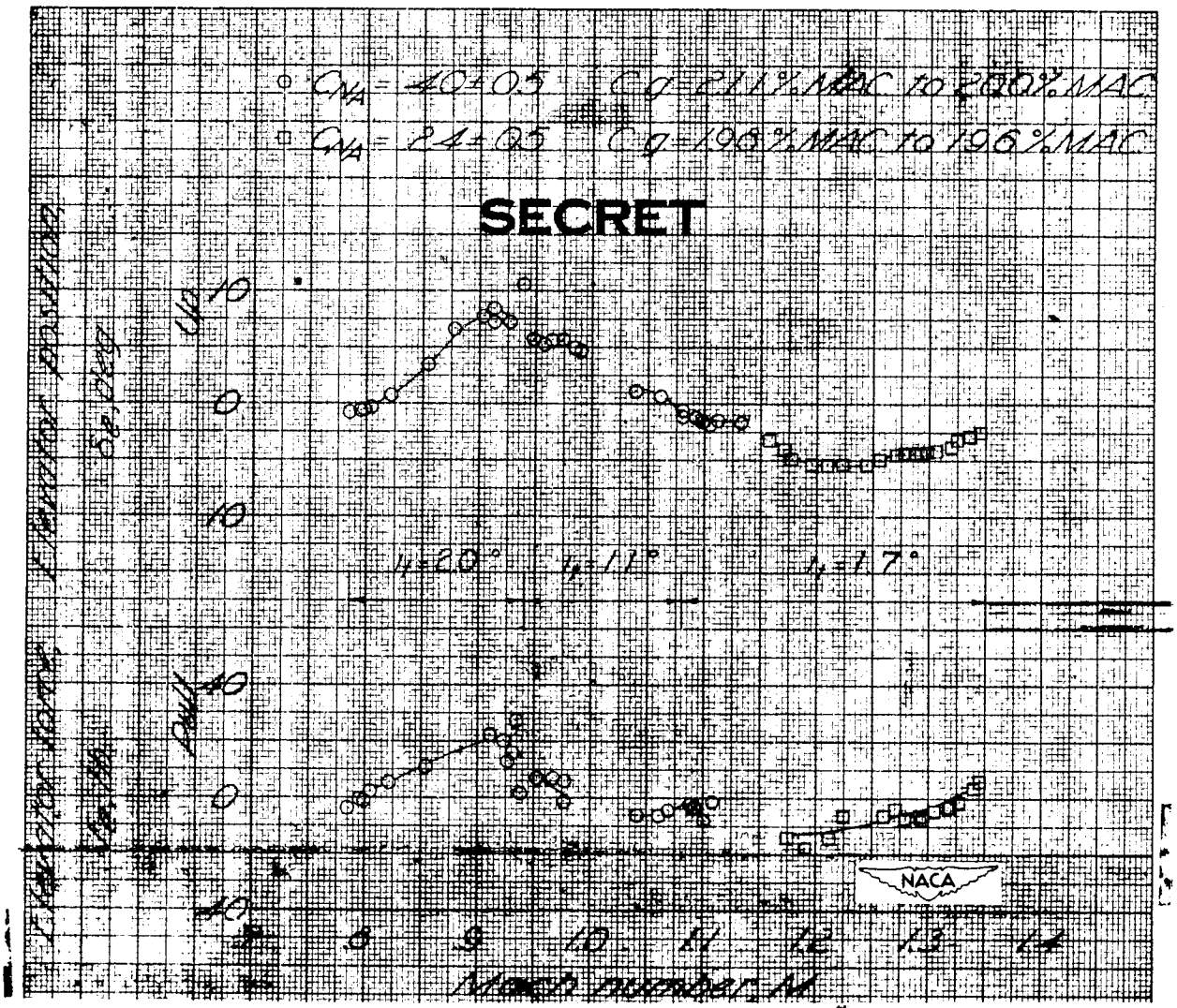

Figure 5.- Variation of measured quantities with Mach number. Flight 16. Air-force tests. XS-1 airplane. 8-percent wing.

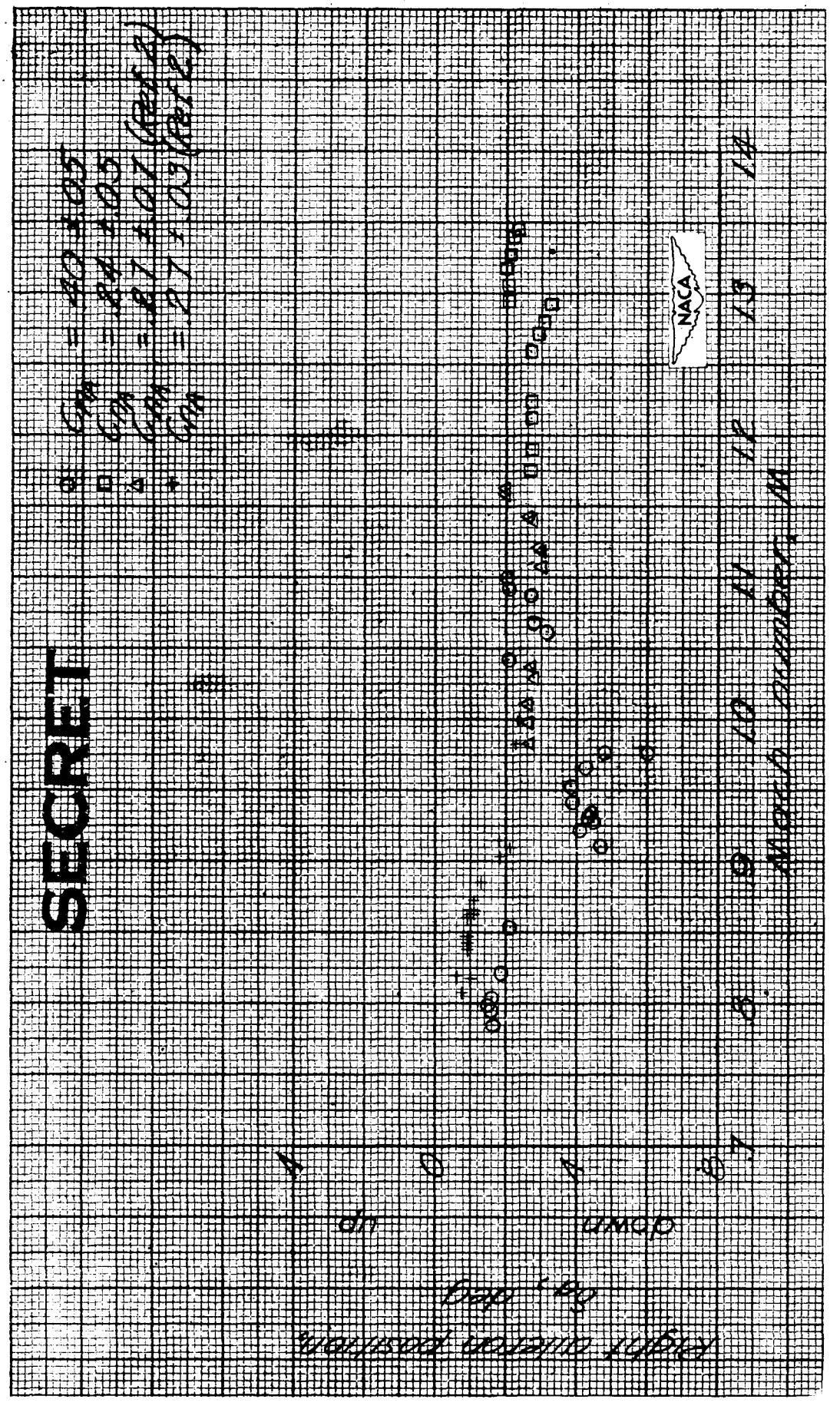

Figure 6.- Variation of aileron angle with Mach number. Air-force tests. XS-1 airplane. 8-percent wing.

SECRET