[redacted]

142

Copy
RM L9A31

NACA RM L9A31

NACA Date 5-15-51
Change to
Doris Greene
6-14-51

RESEARCH MEMORANDUM

STABILITY AND CONTROL DATA OBTAINED FROM FIRST FLIGHT OF X-4 AIRPLANE

By Hubert M. Drake

Langley Aeronautical Laboratory
Langley Air Force Base, Va.

CLASSIFICATION CHANGED
TO Unclassified
BY AUTHORITY OF 2415 Date 12-2-54

CLASSIFIED DOCUMENT

This document contains classified information affecting the National Defense of the United States within the meaning of the Espionage Act, USC 50:31 and 32. Its transmission or the revelation of its contents in any manner to an unauthorized person is prohibited by law. Information so classified may be imparted only to persons in the military and naval services of the United States, appropriate civilian officers and employees of the Federal Government who have a legitimate interest therein, and to United States citizens of known loyalty and discretion who of necessity must be informed thereof.

NATIONAL ADVISORY COMMITTEE FOR AERONAUTICS

WASHINGTON

February 7, 1949

[redacted]

NATIONAL ADVISORY COMMITTEE FOR AERONAUTICS

RESEARCH MEMORANDUM

STABILITY AND CONTROL DATA OBTAINED FROM FIRST FLIGHT OF X-4 AIRPLANE

By Hubert M. Drake

SUMMARY

NACA instrumentation has been installed in the X-4 airplanes to obtain stability and control data during the Northrop conducted acceptance tests. The results of the first flight of the X-4 number 1 airplane are presented in this report. These data were obtained for a center-of-gravity position of about 22 percent of the mean aerodynamic chord. A maximum indicated airspeed and pressure altitude of 290 miles per hour and 11,000 feet, respectively, were obtained during the flight.

Results of the flight indicated that the airplane is slightly unstable, stick fixed, in gear-up, flaps-up configuration for a center-of-gravity position at 21.4 percent of the mean aerodynamic chord. The pilot reported that it was difficult to maintain steady flight in this configuration. There was no indication of a snaking or lateral oscillation for the speed range covered. For gear-down configuration at low lift coefficients with the center of gravity at 22.4 and 21.6 percent of the mean aerodynamic chord the airplane was longitudinally stable; however, at high lift coefficients, it was indicated that the airplane was longitudinally unstable. The rudder effectiveness appeared to be low in the gear-down, low-speed condition. The maximum rate of rudder motion of 25° per second available with the present control system was considered by the pilot to be too slow.

INTRODUCTION

As a part of the Air-Force - Navy - NACA transonic flight research program, the Northrop Company has constructed the X-4 airplane. This airplane is intended for performing research on a tailless configuration at high subsonic Mach numbers.

NACA recording instrumentation has been installed in the airplane to provide data on stability and control characteristics during the

Northrop conducted acceptance tests. The present report gives data obtained on the first flight, made December 16, 1948, with the center of gravity at about 22 percent mean aerodynamic chord. The speed range covered was from 225 miles per hour to 290 miles per hour at 11,000 feet pressure altitude in the clean condition and from 145 miles per hour to 210 miles per hour in the gear-down condition at 2200 feet pressure altitude.

SYMBOLS

V_i indicated airspeed, miles per hour

β sideslip angle, degrees

δ_e elevon angle, degrees

δ_r rudder angle, degrees

q dynamic pressure, pounds per square foot

s wing area, square feet

W airplane weight, pounds

C_n airplane normal-force coefficient $\left(\frac{nW}{qs}\right)$

n normal acceleration

Subscripts:

R, L right and left elevons, respectively

AIRPLANE

The Northrop X-4 airplane is a semi-tailless research airplane having a vertical tail but no horizontal tail surfaces. It is powered by two Westinghouse J30-WE-7-9 engines and is designed for flight research in the high subsonic speed range. Photographs of the airplane are presented as figure 1 and a three-view drawing as figure 2. Table I lists the physical characteristics of the airplane.

TEST INSTRUMENTATION

Because of the small size of the X-4 airplane and the instrumentation requirements for the Northrop structure and engine temperature measurements it was possible to install only a minimum of stability and control instrumentation. Standard NACA internal instruments record altitude, airspeed, angle of sideslip, right and left elevon position, and rudder position. In addition, the following quantities are telemetered to a ground station: normal acceleration, altitude, airspeed, right and left elevon position, and rudder position. All of the records are correlated by a common timer.

The recording airspeed and altimeter are connected to the airspeed head on the vertical fin. A calibration of this installation has not yet been made.

RESULTS AND DISCUSSION

During this flight, the pilot took a record of the take-off, a record in the air where the speed was changed from approximately 250 miles per hour to 275 miles per hour and thence to 225 miles per hour indicated airspeed, and a record of the landing. Due to a failure of the telemeter, no record was obtained of normal acceleration. The data presented therefore were taken only from steady flight so that it could be reasonably assumed the airplane was at 1 g normal acceleration.

A measure of the stick-fixed stability is shown in figure 3 where the longitudinal control angle, $\frac{\delta_{e_L} + \delta_{e_R}}{2}$, is plotted against indicated airspeed, V_i, and normal-force coefficient. These data show that in the clean condition the airplane is slightly unstable as shown by an upward deflection of the control required for increasing speed. The pilot stated that it was impossible to trim the airplane in the clean condition. With gear down the airplane is stable for both center-of-gravity positions. There is an indication that there may be some instability at high normal-force coefficients with the gear down. However, the data at 145 miles per hour were obtained in the landing approach just before contact so there may be some effects of the proximity of the ground on these data. Although these data are rather sketchy, they indicate that the center of gravity should be moved forward.

Figure 4 shows a time history of an elevon and rudder disturbance just after take-off. As noted in the figure, a portion of the

left-elevon-position record was not obtained. This record gives an indication of the relative effectiveness of the rudder control, a change of about 20° in rudder angle producing a change of 6° in sideslip angle. The pilot stated that the rudder control seemed to have considerable lag and the motion of the control was too slow. Figure 4 shows that the rate of rudder motion was about 25° per second, which rate is considerably slower than the rate at which a pilot is able to move the rudder pedals. The electrical system which operates the rudder is arranged to give several rates of control movement corresponding to the rate at which the pilot moves the pedals. The rate of 25° per second is the maximum rate that is available to the pilot at the present. The flight records showed this rate was used in virtually all rudder applications indicating that motion to the pedals was applied at a rate of 25° per second or greater. During the first attempt for take-off, it was also indicated that this rate of rudder movement is too slow for maintaining directional control.

The pilot reported excessive friction in the elevon control system which is an irreversible hydraulic system with artificial feel for the pilot. He also reported that the aileron forces seemed very heavy relative to the elevator forces which on occasion caused him to apply elevator control as well as aileron when attempting to move only the ailerons. Since the aileron forces are about normal it is believed that the pilot was given this impression by the excessively light elevator forces. Since the elevator-force system depends primarily upon elevator position, it could be expected that with a change in center-of-gravity location sufficient to provide adequate stick-fixed longitudinal stability, the aileron-elevator forces would be proportioned satisfactorily.

Inspection of the sideslip records showed no evidence of snaking oscillation over the range of speeds covered.

CONCLUSIONS

From data obtained during the first flight of the X-4 number 1 airplane, it is indicated that:

1. The airplane is slightly unstable, stick fixed, with the center of gravity at 22.4 percent mean aerodynamic chord in the clean condition and at high lift coefficients in the gear-down, flaps-up condition.

2. The maximum rate of rudder movement, 25° per second, is undesirably low.

3. There is no indication of a snaking oscillation over the speed range covered.

4. The rudder effectiveness is low in the gear-down, low-speed condition.

Langley Aeronautical Laboratory
National Advisory Committee for Aeronautics
Langley Air Force Base, Va.

TABLE I

PHYSICAL CHARACTERISTICS OF X-4 AIRPLANE

Engine:	2 Westinghouse J-30-WE-7-9
Rating (each)	1600 pounds static thrust at sea level
Weight for acceptance tests, pounds:	
Maximum 240 gallons fuel	7050
Minimum (10 gal fuel trapped)	5670
Wing loading, pounds per square foot:	
Maximum	35.2
Minimum	28.3
Center-of-gravity travel (first flight)	
Percent MAC:	
Gear down, full load	22.5
empty	20.2
Gear up, full load	22
empty	19.7
Height, over all, feet	14.83
Length, over all, feet	23.25
Wing:	
Area, square feet	200
Span, feet	26.83
Airfoil section	0010-64
Mean aerodynamic chord, feet	7.81
Aspect ratio	3.6
Root chord, feet	10.25
Tip chord, feet	4.67
Taper ratio	2.2:1
Sweepback (leading edge), degrees	41.57
Dihedral (chord plane), degrees	0
Wing flaps (split):	
Area, square feet	16.7
Span, feet	8.92
Chord, percent wing chord	25
Travel, degrees	30
Dive brake dimensions as flaps	
Travel, degrees	± 60

TABLE I – Continued

Elevons:	
Area (total), square feet	17.20
Span (2 elevons), feet	15.45
Chord, percent wing chord	20
Movement, degrees	Up – 35 Down – 25
Operation	Hydraulic with electrical emergency
Vertical tail:	
Area, square feet	16
Height, feet	5.96
Rudder:	
Area, square feet	4.1
Span, feet	4.3
Travel, degrees	30
Operation	Electrical, in case of electrical failure rudder can be locked

SECRET

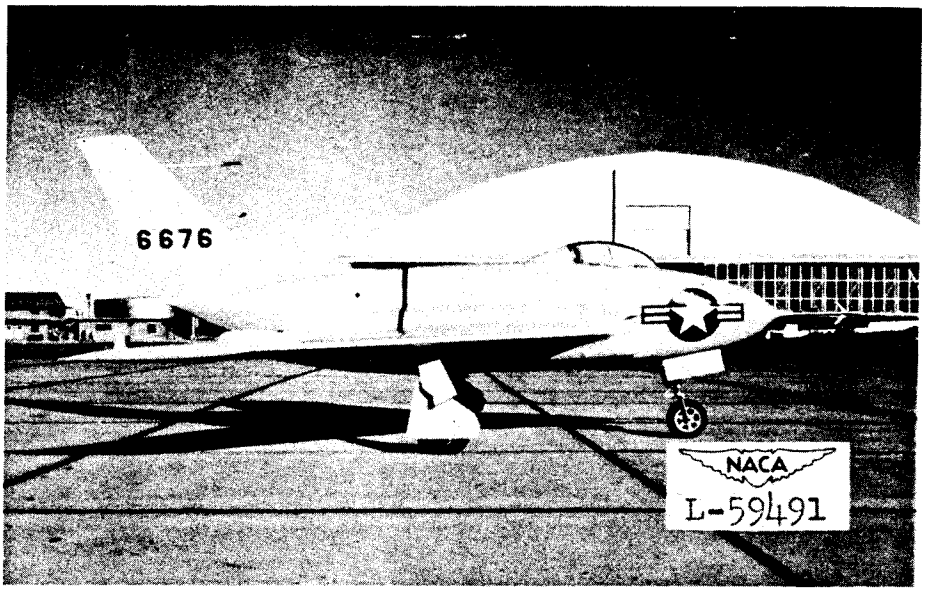

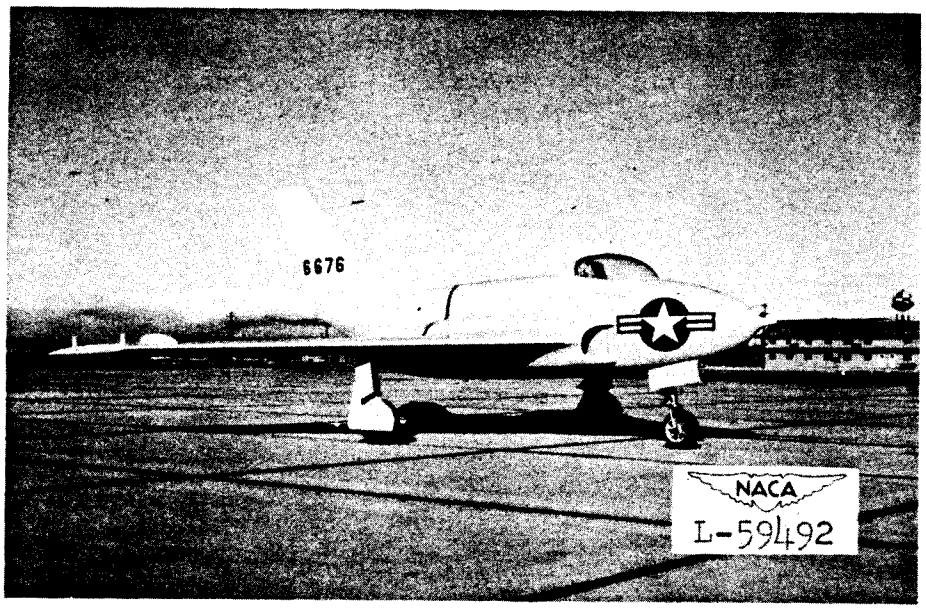

Figure 1.– Photographs of X-4 airplane.

SECRET

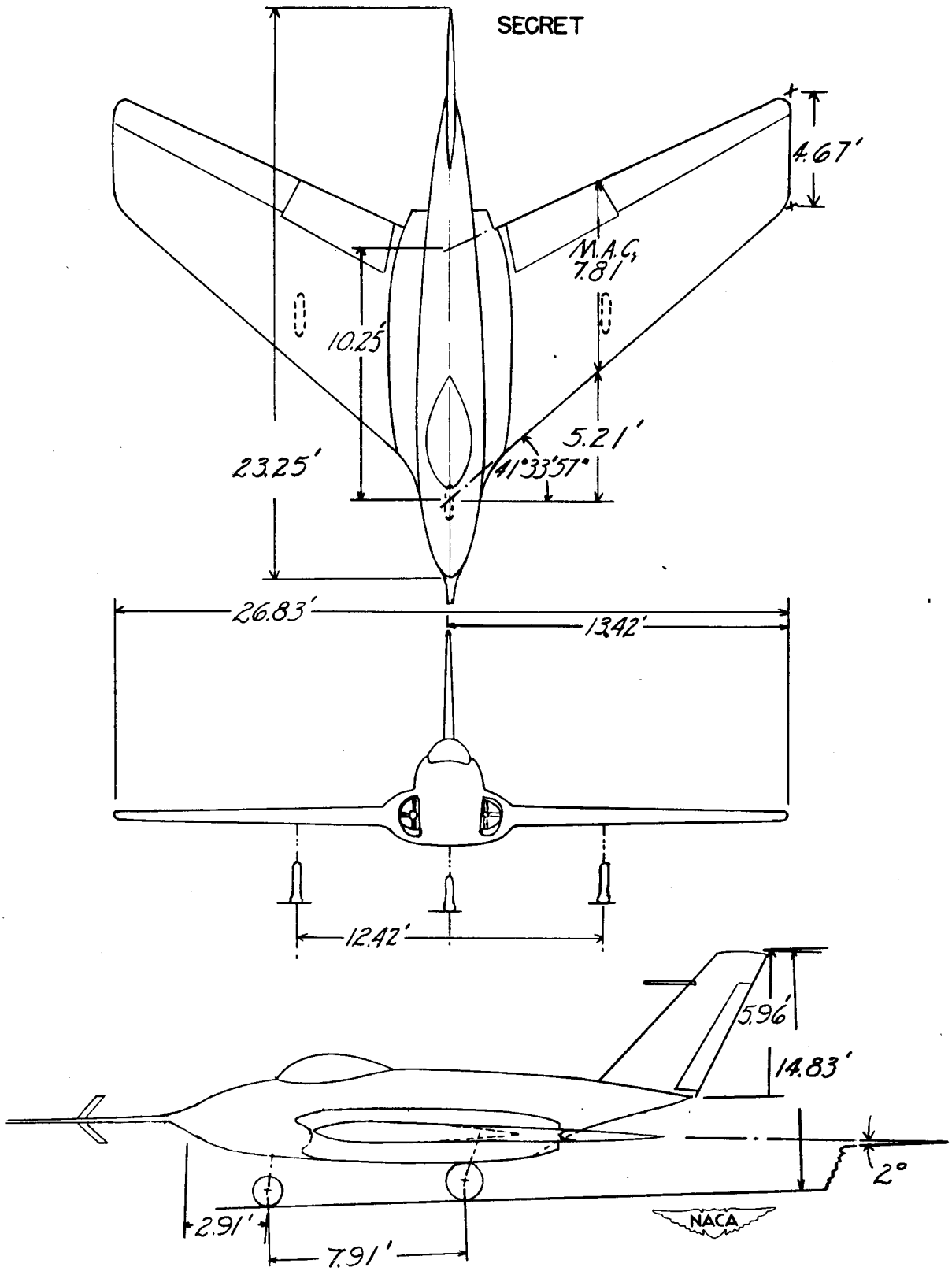

Figure 2.– Three-view drawing of X-4 airplane.

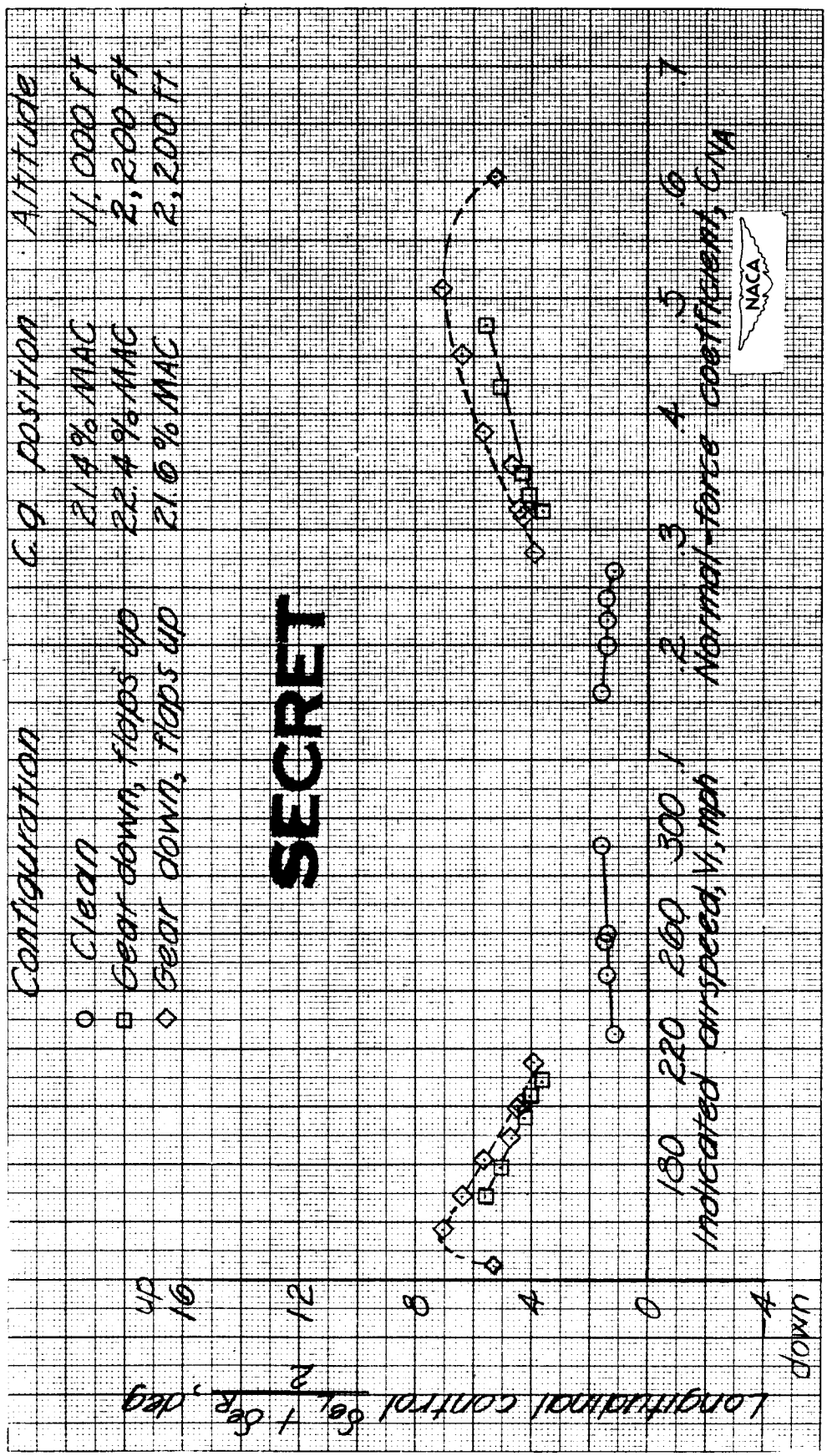

Figure 3.- Variation of elevon angle with airspeed and normal-force coefficient for X-4 airplane.

SECRET

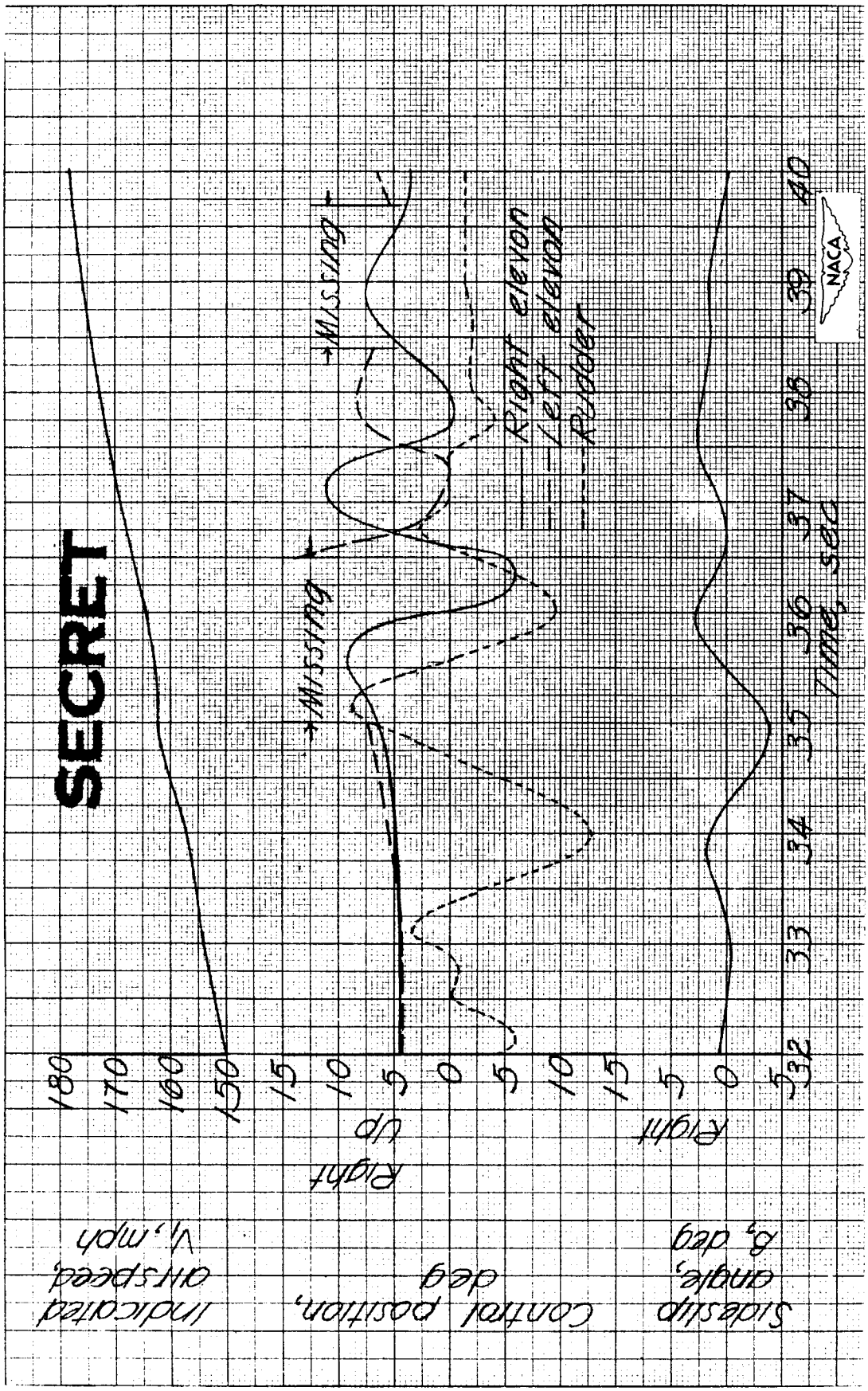

Figure 4.- Time history of elevon and rudder disturbance after take-off. X-4 airplane. Pressure altitude 2100 feet, gear down, flaps up, center of gravity at 22.4 percent mean aerodynamic chord.

SECRET