[redacted]

Copy
RM H55H03

NACA RM H55H03

NACA

RESEARCH MEMORANDUM

LIBRARY NACA - HSFRS

FLIGHT EXPERIENCE WITH A DELTA-WING AIRPLANE HAVING VIOLENT LATERAL-LONGITUDINAL COUPLING IN AILERON ROLLS

By Thomas R. Sisk and William H. Andrews

High-Speed Flight Station
Edwards, Calif.

LIBRARY NACA - HSFRS

Classification Changed to Unclassified
"per NASA-TPA-#63-
8 Dec 61

CLASSIFIED DOCUMENT

This material contains information affecting the National Defense of the United States within the meaning of the espionage laws, Title 18, U.S.C., Secs. 793 and 794, the transmission or revelation of which in any manner to an unauthorized person is prohibited by law.

NATIONAL ADVISORY COMMITTEE
FOR AERONAUTICS
WASHINGTON
October 7, 1955

[redacted]

LIBRARY NACA - HSFF

NATIONAL ADVISORY COMMITTEE FOR AERONAUTICS

RESEARCH MEMORANDUM

FLIGHT EXPERIENCE WITH A DELTA-WING AIRPLANE HAVING VIOLENT LATERAL-LONGITUDINAL COUPLING IN AILERON ROLLS

By Thomas R. Sisk and William H. Andrews

SUMMARY

During a flight investigation of the lateral stability characteristics of a high-speed delta-wing airplane, violent cross-coupled lateral and longitudinal motions were encountered. The maneuver which produced these motions was an abrupt, rudder-fixed aileron roll performed at a Mach number of 0.75 at about 40,000 feet. The motions were characterized by extreme variations in angle of attack and angle of sideslip which caused the airplane to exceed the normal and transverse acceleration limitations.

INTRODUCTION

During flight testing of both the X-3 straight-wing research airplane and a swept-wing fighter-type airplane, a number of aileron rolls were performed which resulted in extremely violent inadvertent lateral and longitudinal motions. In all cases the motions were characterized by the attainment of large angles of sideslip and attack with resulting high load factors. These data are presented in reference 1. Reference 2 points out that this difficulty might be encountered with airplanes experiencing high rates of roll and some analysis of this general problem of roll coupling is presented in references 3 and 4.

This paper presents data for a delta-wing airplane in which the same difficulty was encountered during abrupt, rudder-fixed aileron rolls as was encountered with the airplanes of reference 1. In order to expedite reporting, since it is felt that other current airplanes might be expected to encounter similar behavior, the data are presented with little attempt at analysis.

SYMBOLS

a_n normal acceleration at center of gravity, g units

a_t transverse acceleration at center of gravity, g units

b span, ft

C_L lift coefficient, $\frac{\text{Lift}}{\frac{1}{2}\rho V^2 S}$

C_l rolling-moment coefficient, $\frac{\text{Rolling moment}}{\frac{1}{2}\rho V^2 Sb}$

C_m pitching-moment coefficient, $\frac{\text{Pitching moment}}{\frac{1}{2}\rho V^2 S\bar{c}}$

C_n yawing-moment coefficient, $\frac{\text{Yawing moment}}{\frac{1}{2}\rho V^2 Sb}$

C_Y lateral-force coefficient, $\frac{\text{Lateral force}}{\frac{1}{2}\rho V^2 S}$

C_{N_A} airplane normal-force coefficient, $\frac{Wa_n}{\frac{1}{2}\rho V^2 S}$

$\bar{c}$ mean aerodynamic chord, ft

F_a aileron stick force, lb

F_e elevator stick force, lb

F_r rudder pedal force, lb

g acceleration due to gravity, ft/sec^2

h_p pressure altitude, ft

I_X moment of inertia about longitudinal body axis, slug-ft^2

I_{XZ}	product of inertia, slug-ft^2
I_Y	moment of inertia about lateral body axis, slug-ft^2
I_Z	moment of inertia about normal body axis, slug-ft^2
M	Mach number
p	rolling angular velocity, radians/sec
q	pitching angular velocity, radians/sec
$\dot{q}$	pitching angular acceleration, radians/sec^2
r	yawing angular velocity, radians/sec
$\dot{r}$	yawing angular acceleration, radians/sec^2
S	wing area, sq ft
t	time, sec
V	velocity, ft/sec
W	airplane weight, lb
α	indicated angle of attack, deg or radians
$\dot{\alpha}$	$\frac{d\alpha}{dt}$, radians/sec
β	indicated angle of sideslip, deg
δ_a	aileron control angle, $\delta_{e_L} - \delta_{e_R}$, deg
δ_e	elevator control angle, $\frac{\delta_{e_L} + \delta_{e_R}}{2}$, deg
δ_{e_L}	left control surface deflection, deg
δ_{e_R}	right control surface deflection, deg
δ_l	longitudinal stick position, in.
δ_p	rudder pedal position, in.

δ_r rudder control angle, deg

δ_t transverse stick position, in.

ϵ inclination of principal axis, positive when below body axis at nose, deg

ρ density, slugs/cu ft

φ bank angle, deg

$C_{L_\alpha} = \frac{dc_L}{d\alpha}$

$C_{l_p} = \frac{dC_l}{d\frac{pb}{2V}}$

$C_{l_r} = \frac{dC_l}{d\frac{rb}{2V}}$

$C_{l_\beta} = \frac{dC_l}{d\beta}$

$C_{l_{\delta_a}} = \frac{dC_l}{d\delta_a}$

$C_{m_q} = \frac{dC_m}{d\frac{q\bar{c}}{2V}}$

$C_{m_\alpha} = \frac{dC_m}{d\alpha}$

$C_{m_{\dot{\alpha}}} = \frac{dC_m}{d\frac{\dot{\alpha}\bar{c}}{2V}}$

$C_{m_{\delta_e}} = \frac{dC_m}{d\delta_e}$

$C_{n_p} = \frac{dC_n}{d\frac{pb}{2V}}$

$$C_{n_r} = \frac{dC_n}{d\frac{rb}{2V}}$$

$$C_{n_\beta} = \frac{dC_n}{d\beta}$$

$$C_{n_{\delta_a}} = \frac{dC_n}{d\delta_a}$$

$$C_{Y_\beta} = \frac{dC_Y}{d\beta}$$

AIRPLANE AND INSTRUMENTATION

The mass and geometric characteristics of the airplane are presented in table I. A three-view drawing is shown as figure 1 and photographs are shown in figure 2.

The airplane was instrumented to record those quantities pertinent to the stability and control investigation. The Mach numbers presented are corrected by the airspeed calibration obtained in level flight and for this condition are estimated to be within ±0.01 in Mach number. No corrections have been applied to the static pressure for the large sideslip angles encountered. The angle of attack has been corrected for boom bending and for errors produced by pitching velocity. No attempt has been made to correct for vane floating or upwash errors. Corrections to the sideslip angle for errors caused by rolling and yawing velocities are small and, therefore, have been neglected.

ACCURACY

The instrument accuracies are estimated to be:

p, radians/sec	±0.010
q, radians/sec	±0.005
r, radians/sec	±0.005
α, deg	±0.250
β, deg	±0.250
a_n, g units	±0.050
a_t, g units	±0.025
δ_a, deg	±0.20

The weight was obtained from the pilot's reading of the fuel quantity gage at each maneuver and is believed accurate to ±100 pounds.

TESTS, RESULTS, AND DISCUSSION

The aileron maneuvers presented in this paper were performed during a handling-qualities investigation and consisted of one-quarter and one-half deflection abrupt, rudder-fixed aileron rolls performed at Mach numbers between 0.70 and 0.80 at an altitude of approximately 40,000 feet. The center of gravity for these tests varied between 28.6 and 29.0 percent mean aerodynamic chord.

Because the experiences of reference 1 indicated that handling difficulties might be encountered during aileron roll maneuvers at high rolling velocities, the investigation proceeded with caution. A high test altitude, 40,000 feet, was selected to minimize the loads problem (ref. 3). First, one-quarter deflection and then one-half deflection short duration rolls were performed, generally from a wings-level attitude. Sideslip motions of considerable amplitude were obtained at both deflections as shown in the representative time histories of figure 3.

The time histories of figure 3 show the rolls, left and right, at Mach numbers of 0.70 and 0.80. It may be noted from an inspection of these maneuvers that although large changes in angle of sideslip and angle of attack occurred, the maneuvers were controllable. The sideslip developed (initially adverse) during these maneuvers was on the order of 10°, while the angle of attack decreased approximately 2°. However, the largest change in angle of attack was on the order of a 6° increase. The peak rolling velocity varied from 1.35 to 1.80 radians per second during the maneuvers and the bank angles attained were approximately 200°.

Figure 4 presents a time history of an aileron roll, performed at a Mach number of 0.75, in which the airplane became uncontrollable. The altitude and center-of-gravity position were approximately the same as for the other rolls presented. The initial bank angle was approximately 20° right. An inspection of the time history reveals that the behavior is initially very similar to the other maneuvers, particularly those at $M = 0.80$, with adverse sideslip developing when the roll started. Recovery from the maneuver was initiated at 7.3 seconds. At this time the angle of sideslip increased very rapidly from 12° to 30° and the angle of attack decreased to 13° down where it exceeded the instrument range. The roll velocity had attained a value of 2.0 radians per second and began to decrease at the initiation of recovery; however, as the angle of attack became more negative and sideslip increased, the roll velocity also increased to approximately 4.0 radians per second. As a result of the increased roll velocity, the angle of bank continued to increase from 360° to 500°. The normal acceleration trace exceeded the instrument range at -2.6g, but the g-indicator in the cockpit reached its stop at -5.0g. During this maneuver the recorded maximum transverse acceleration was 1.3g at which point the acceleration exceeded the limit

of the instrument. This load factor considerably exceeded the placard of 0.95g. The maneuver continued beyond the 10 seconds time shown on the time history, but because of a shift of the electrical power to the emergency system, the instrument power was automatically cut off.

The pilot (who had also performed aileron rolls in the airplanes of ref. 1) objected to the roll maneuvers in the delta-wing airplane as being exceedingly uncomfortable. He described the rolls as feeling much like the maneuvers of the swept-wing fighter of reference 1. He felt the momentary hesitation in the development of sideslip which had been encountered in previous controllable manuevers and therefore permitted the roll to continue. Shortly thereafter the pronounced divergence in sideslip began and recovery attempts were initiated. Inspection of figure 4 substantiates the pilot's impressions in that at about time 6.25 seconds the angle of sideslip begins to stabilize, leading him to believe that maximum sideslip had been reached.

At the time the maneuver of figure 4 was encountered, a 5-degree-of-freedom analytical study of the characteristics of the airplane in rolling maneuvers was being initiated using a Goodyear Electronic Differential Analyzer. These general studies were to be used as a guide in extending the flight program to more critical conditions. Some preliminary work has been done on the GEDA in an attempt to match the flight records of figure 4. A typical comparison of the flight and computed results is shown in figure 5. (A summary of the derivatives used is presented as table II.) Although the degree of fit is quite poor, the basic divergent tendencies were manifested in the calculations. The poor simulation is, perhaps, not too surprising in view of the absence of lateral stability information for the cambered-reflexed wing configuration, which necessitated the use of uncambered wing-configuration derivatives.

Further calculations are being made (using, wherever possible, stability derivatives obtained from flight data) to determine the extent to which the divergent tendencies of the subject airplane in rolling maneuvers can be alleviated through rational design modification. It would appear from a preliminary study that an increase in directional stability would be beneficial.

CONCLUDING REMARKS

Violent cross-coupled lateral and longitudinal motions of a delta-wing fighter-type airplane were encountered during an abrupt, rudder-fixed aileron roll at a Mach number of 0.75.

These motions produced large variations in angle of attack and angle of sideslip which resulted in load factors as large as 5g (negative) normal acceleration and 1.3g transverse acceleration.

A preliminary 5-degree-of-freedom analog study of this maneuver indicated that basic divergent tendencies might be expected.

High-Speed Flight Station,
National Advisory Committee for Aeronautics,
Edwards, Calif., July 26, 1955.

REFERENCES

1. NACA High-Speed Flight Station: Flight Experience With Two High-Speed Airplanes Having Violent Lateral-Longitudinal Coupling in Aileron Rolls. NACA RM H55A13, 1955.

2. Phillips, William H.: Effect of Steady Rolling on Longitudinal and Directional Stability. NACA TN 1627, 1948.

3. Weil, Joseph, Gates, Ordway B., Jr., Banner, Richard D., and Kuhl, Albert E.: Flight Experience of Inertia Coupling in Rolling Maneuvers. NACA RM H55E17b, 1955.

4. Gates, Ordway B., Jr., Weil, Joseph, and Woodling, C. H.: Effect of Automatic Stabilization on the Sideslip and Angle-of-Attack Disturbances in Rolling Maneuvers. NACA RM L55E25b, 1955.

5. Beam, Benjamin H., Reed, Verlin D., and Lopez, Armando E.: Wind-Tunnel Measurements at Subsonic Speeds of the Static and Dynamic-Rotary Stability Derivatives of a Triangular-Wing Airplane Model Having a Triangular Vertical Tail. NACA RM A55A28, 1955.

TABLE I

PHYSICAL CHARACTERISTICS OF THE TEST AIRPLANE

Wing:	
Airfoil section	NACA 0004-65 (modified)
Total area, sq ft	698.05
Span, ft	38.19
Mean aerodynamic chord, ft	23.75
Root chord, ft	35.63
Tip chord, ft	0.81
Taper ratio	0.023
Aspect ratio	2.08
Sweep at leading edge, deg	60°6'
Incidence, deg	0
Dihedral, deg	0
Conical camber (leading edge), percent chord	6.3
Geometric twist, deg	0
Inboard fence, percent wing span	37
Outboard fence, percent wing span	67
Tip reflex, deg	10
Elevons:	
Area (total, rearward of hinge line), sq ft	67.77
Span (one elevon), ft	13.26
Root chord (rearward of hinge line, parallel to fuselage center line), ft	3.15
Tip chord (rearward of hinge line), ft	2.03
Elevator travel, deg	
Up	35
Down	20
Aileron travel total, deg	20
Operation	Hydraulic
Vertical tail:	
Airfoil section	NACA 0004-65 (modified)
Area (above station 33), sq ft	68.33
Sweep at leading edge, deg	60
Height above fuselage center line, ft	11.41
Rudder:	
Area (rearward of hinge line), sq ft	10.47
Span, ft	5.63
Root chord (rearward of hinge line), ft	2.10
Tip chord (rearward of hinge line), ft	1.61
Travel, deg	±25
Operation	Hydraulic
Fuselage:	
Length, ft	52.4
Maximum diameter, ft	6.5
Power plant:	
Engine	Pratt & Whitney J57-P-11 turbojet with afterburner
Rating:	
Static thrust at sea level, lb	9,700
Static thrust at sea level, afterburner, lb	14,800
Center-of-gravity location, percent $\bar{c}$:	
Empty weight	25.6
Total weight	29.8
Moments of inertia (for 24,000 lb gross weight):	
I_X, slug-ft^2	13,200
I_Y, slug-ft^2	106,000
I_Z, slug-ft^2	114,600
I_{XZ}, slug-ft^2	3,540
Inclination of principal axis below reference axis at nose, deg	2

TABLE II

DERIVATIVES USED TO CALCULATE MOTIONS PRESENTED IN FIGURE 5

$[\epsilon = 2^{\circ}]$

Derivative	Value	Derivative	Value
C_{l_p}	-0.195	C_{n_β}	0.046
C_{l_r}	.070	C_{n_p}	0
$C_{l_{\delta_a}}$	.0788	C_{n_r}	-.140
C_{m_α}	-.360	$C_{n_{\delta_a}}$	-.0138
C_{m_q}	-1.500	C_{Y_β}	-.570
$C_{m_{\dot{\alpha}}}$	-.450	C_{L_α}	2.780
$C_{m_{\delta_e}}$	-.332		

C_{l_β}, per radian	α, radians
0.024	-0.500
.024	-.070
-.050	.070
-.050	.140
.010	.175
-.094	.210
-.094	.500

NOTE: All values were estimated from reference 5 and various unpublished sources.

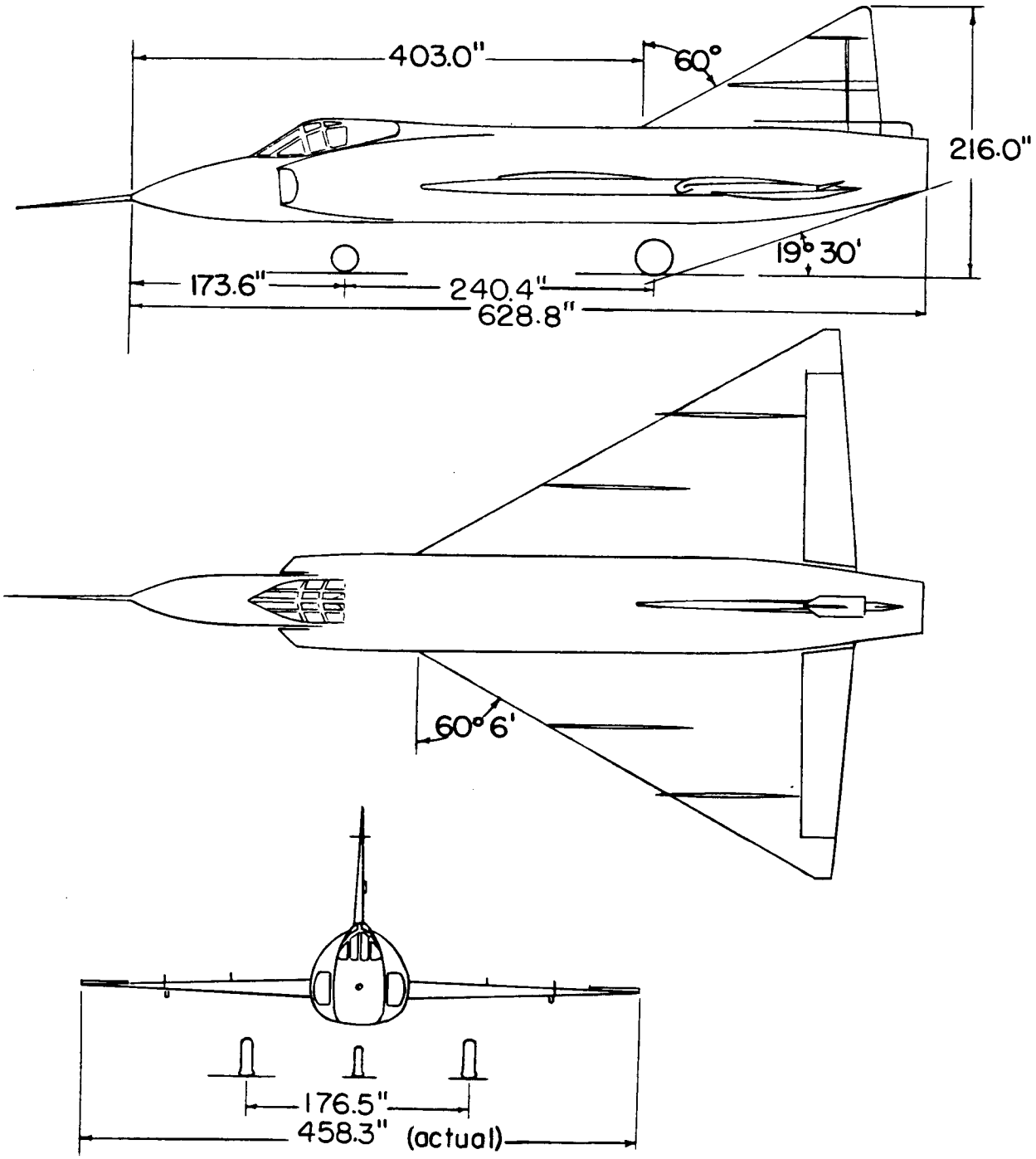

Figure 1.- Three-view drawing of the airplane.

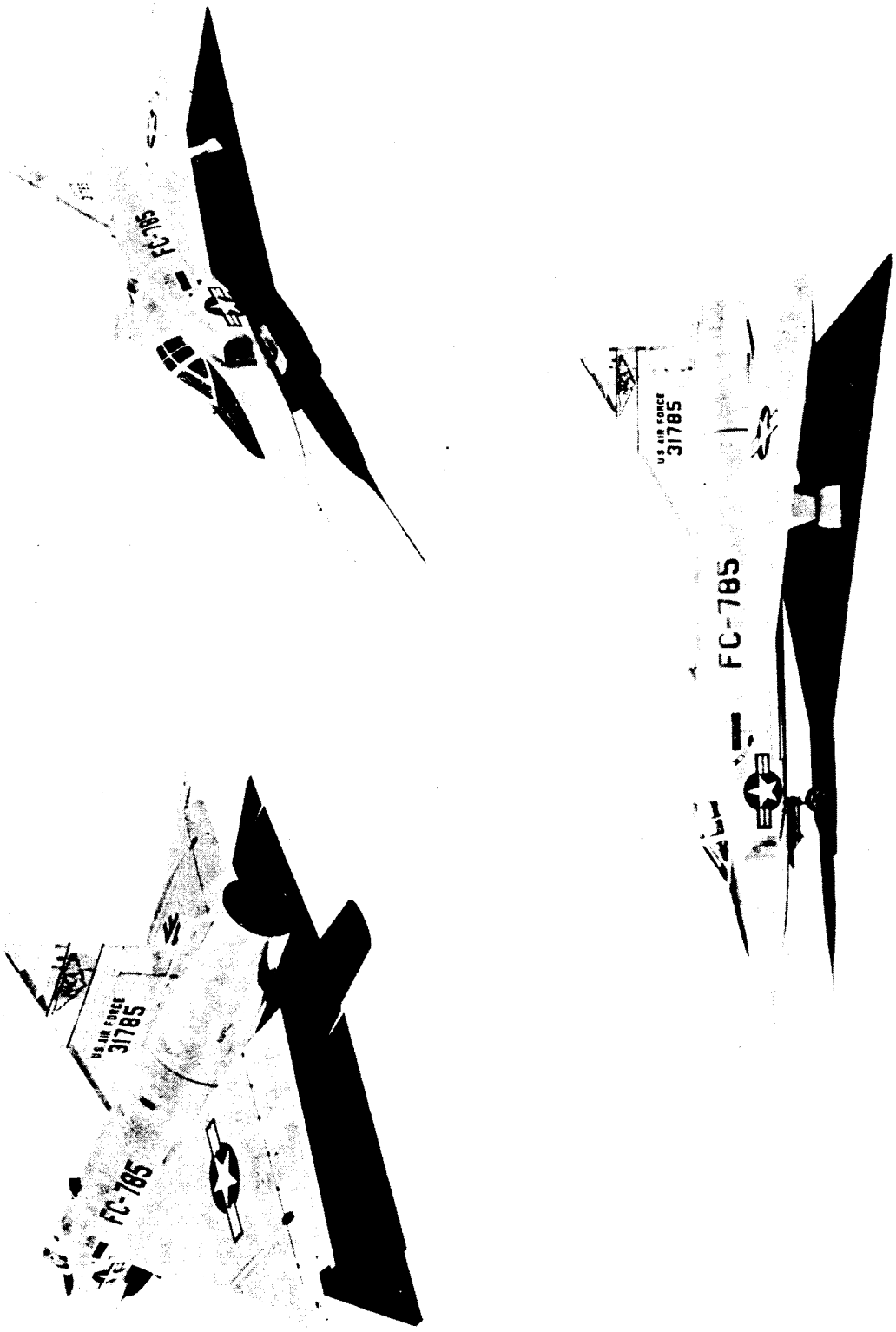

L-89379

Figure 2.- Photographs of the airplane.

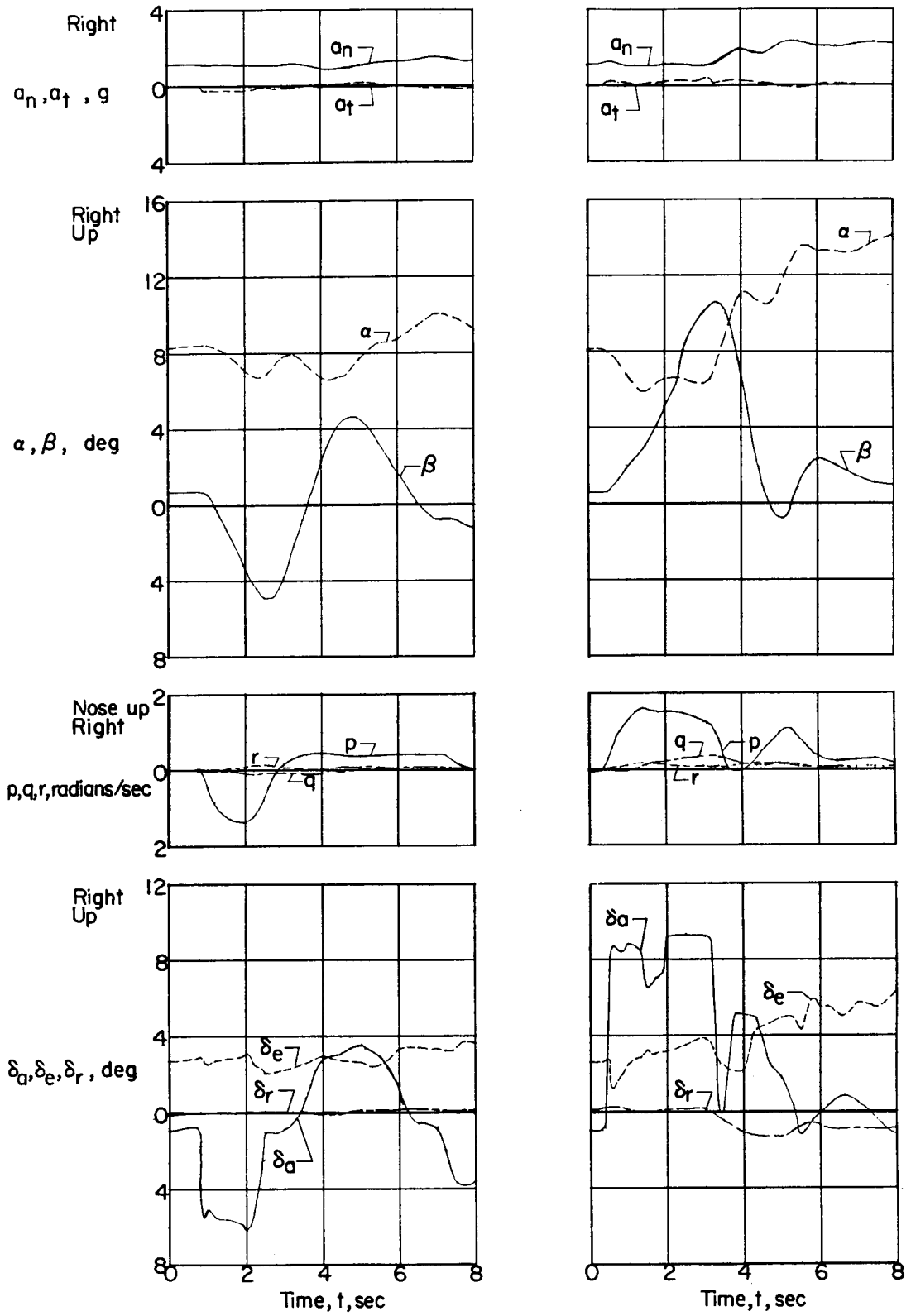

(a) M = 0.70; h_p = 39,200 feet. (b) M = 0.70; h_p = 38,900 feet.

Figure 3.- Representative time histories of aileron rolls.

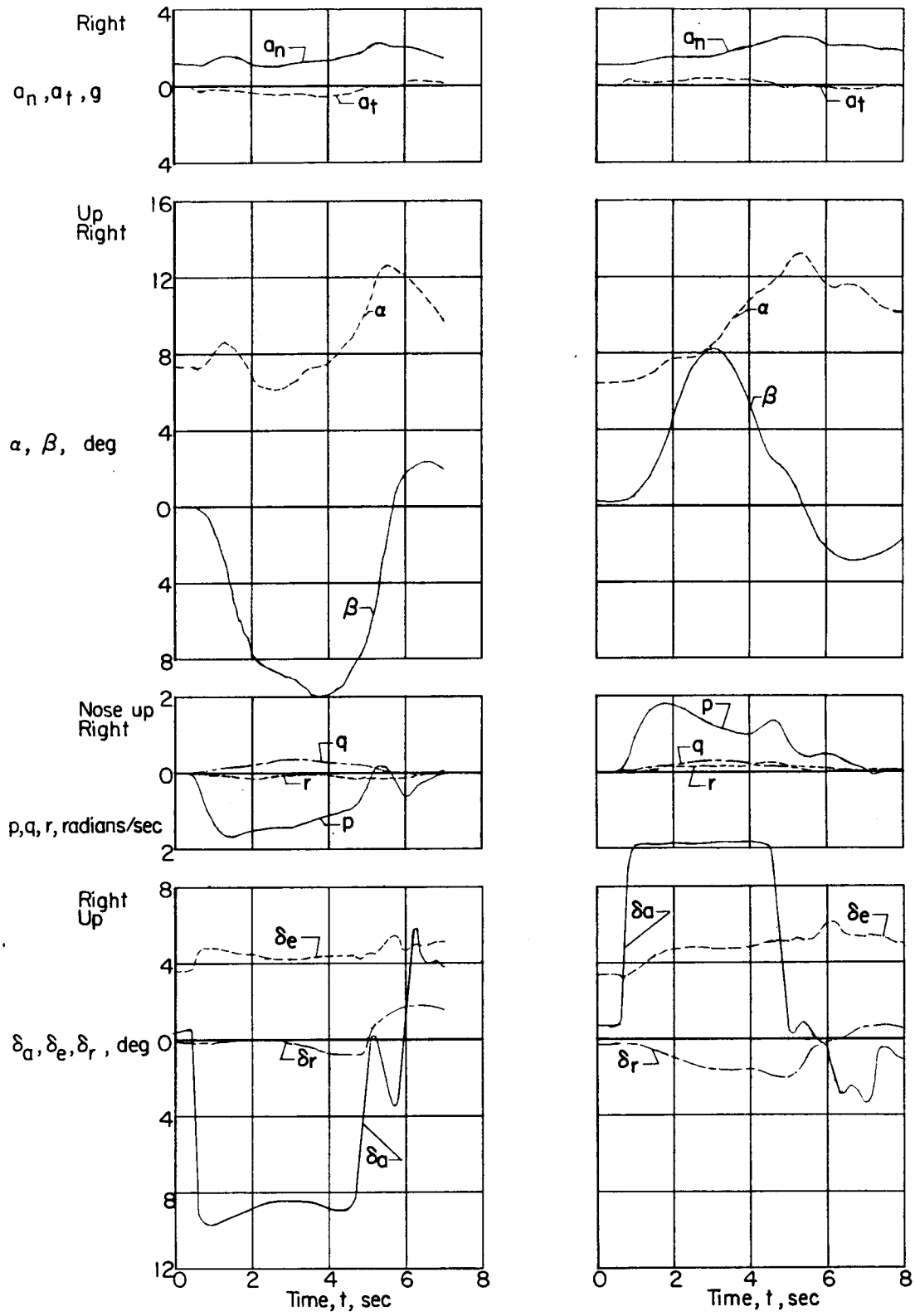

(c) M = 0.80; h_p = 40,800 feet. (d) M = 0.80; h_p = 39,500 feet.

Figure 3.- Concluded.

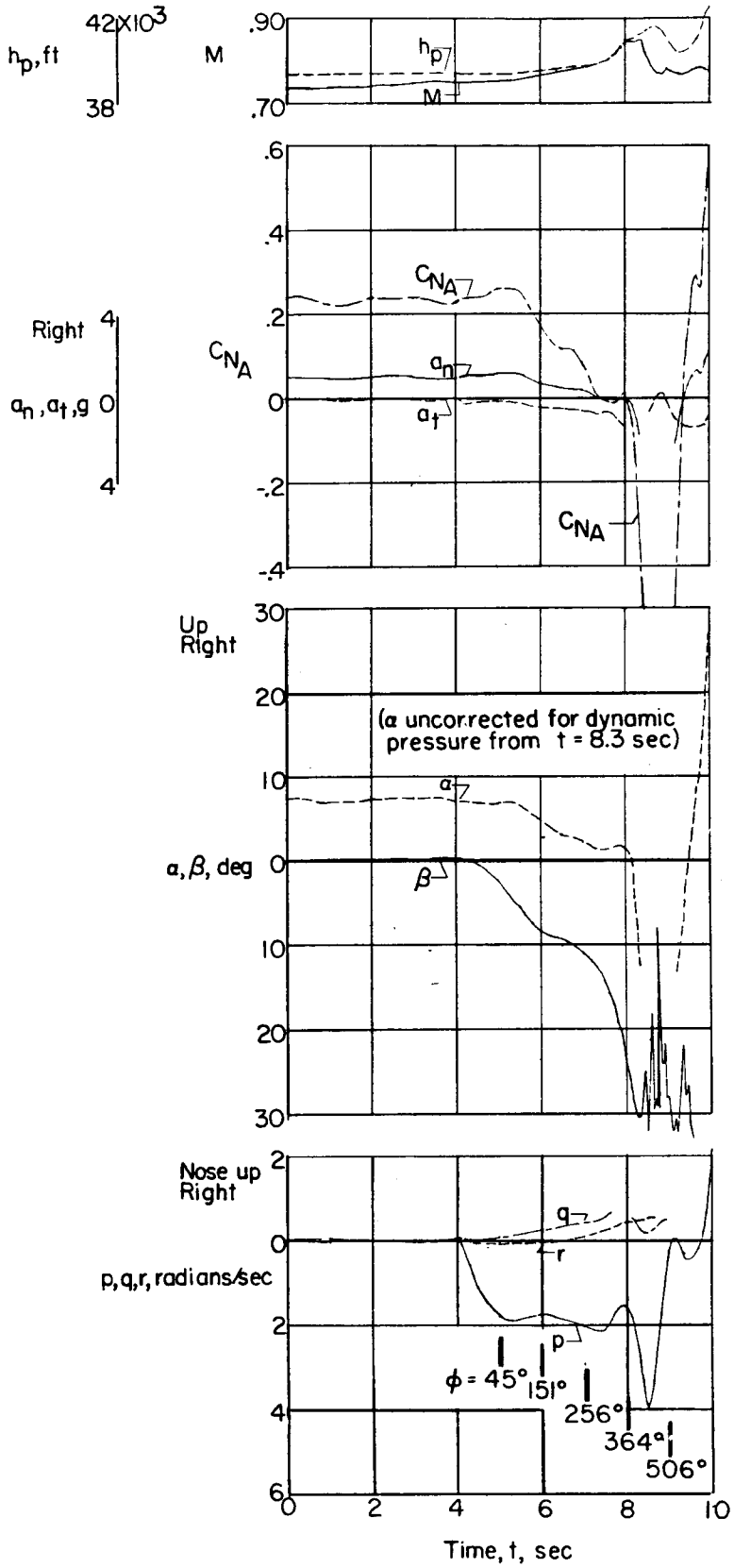

Figure 4.- Time history of half deflection aileron roll in which airplane became uncontrollable. M = 0.75; h_p = 39,500 feet.

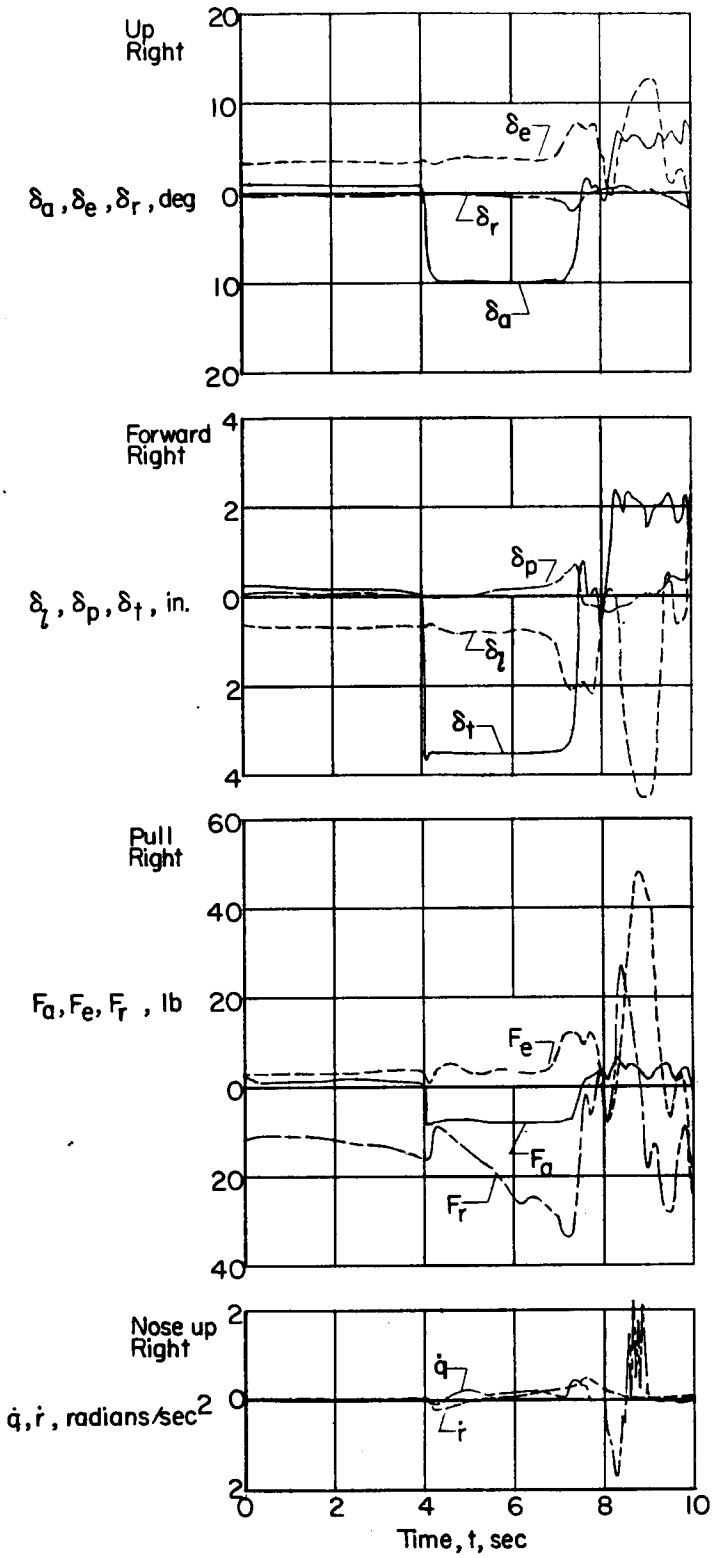

Figure 4.- Concluded.

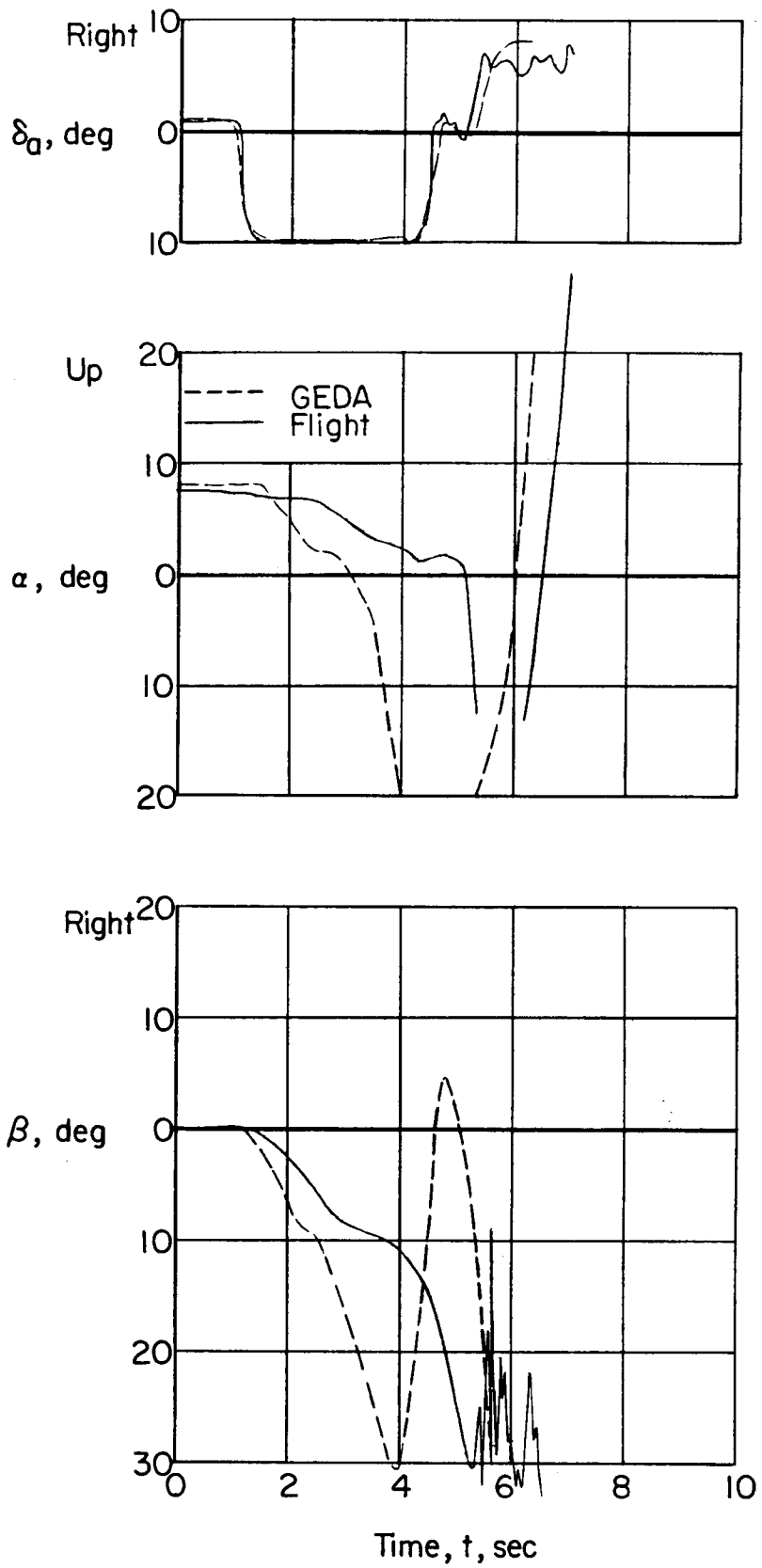

Figure 5.- Comparison of the maneuver of figure 4 with Goodyear Electronic Differential Analyzer simulation.

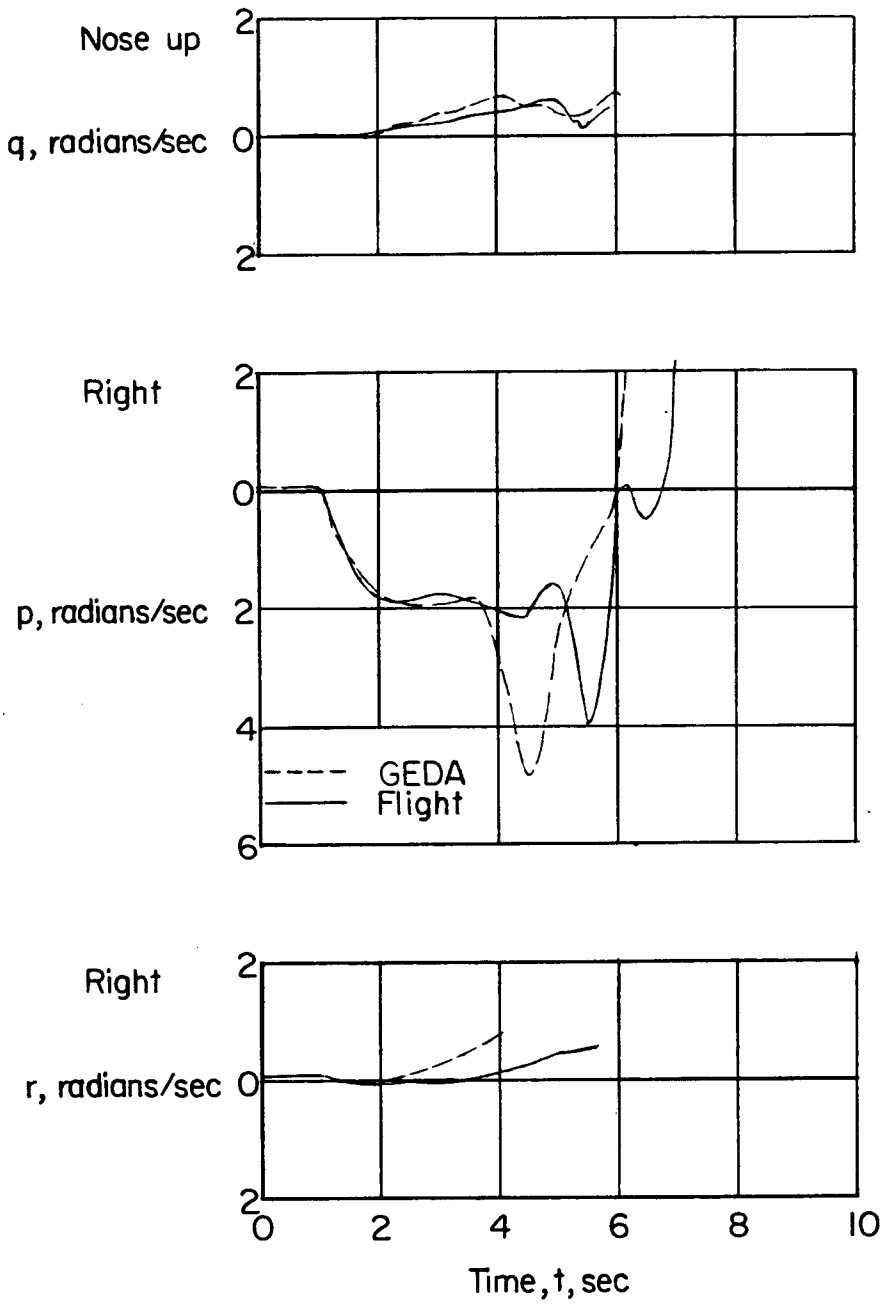

Figure 5.- Concluded.

LIBRARY NACA - LANGLEY

NACA - Langley Field, Va.