NASA TECHNICAL MEMORANDUM

NASA TM X-2956

NASA TM X-2956

HL-10 LIFTING BODY FLIGHT CONTROL SYSTEM CHARACTERISTICS AND OPERATIONAL EXPERIENCE

by Weneth D. Painter and George J. Sitterle

Flight Research Center
Edwards, Calif. 93523

NATIONAL AERONAUTICS AND SPACE ADMINISTRATION • WASHINGTON, D. C. • JANUARY 1974

1. Report No.	2. Government Accession No.	3. Recipient's Catalog No.
NASA TM X-2956		

4. Title and Subtitle	5. Report Date
HL-10 LIFTING BODY FLIGHT CONTROL SYSTEM CHARACTERISTICS AND OPERATIONAL EXPERIENCE	January 1974
	6. Performing Organization Code
7. Author(s)	8. Performing Organization Report No.
Weneth D. Painter and George J. Sitterle	H-704
9. Performing Organization Name and Address	10. Work Unit No.
NASA Flight Research Center P. O. Box 273 Edwards, California 93523	756-48-01-00
	11. Contract or Grant No.
12. Sponsoring Agency Name and Address	13. Type of Report and Period Covered
National Aeronautics and Space Administration Washington, D.C. 20546	Technical Memorandum
	14. Sponsoring Agency Code

15. Supplementary Notes

16. Abstract

A flight evaluation was made of the mechanical hydraulic flight control system and the electrohydraulic stability augmentation system installed in the HL-10 lifting body research vehicle. Flight tests performed in the speed range from landing to a Mach number of 1.86 and the altitude range from 697 meters (2300 feet) to 27,550 meters (90,300 feet) were supplemented by ground tests to identify and correct structural resonance and limit-cycle problems. Severe limit-cycle and control sensitivity problems were encountered during the first flight. Stability augmentation system structural resonance electronic filters were modified to correct the limit-cycle problem. Several changes were made to control stick gearing to solve the control sensitivity problem. Satisfactory controllability was achieved by using a nonlinear system. A limit-cycle problem due to hydraulic fluid contamination was encountered during the first powered flight, but the problem did not recur after preflight operations were improved.

17. Key Words (Suggested by Author(s))	18. Distribution Statement
Control system Aircraft control system	Unclassified - Unlimited

19. Security Classif. (of this report)	20. Security Classif. (of this page)	21. No. of Pages	22. Price*
Unclassified	Unclassified	34	$3.00

* For sale by the National Technical Information Service, Springfield, Virginia 22151

HL-10 LIFTING BODY FLIGHT CONTROL SYSTEM CHARACTERISTICS AND OPERATIONAL EXPERIENCE

Weneth D. Painter and George J. Sitterle
Flight Research Center

INTRODUCTION

Space exploration has aroused considerable interest in the development of piloted reentry vehicles that combine high maneuverability with the design and operational simplicity of the capsule configurations. Such a vehicle must be controllable enough to allow the pilot to control reentry operations, particularly during terminal guidance, navigation, and landing (refs. 1 to 3). Operational experience gained from flight tests of the HL-10 lifting body research vehicle (ref. 3) is believed to be a valuable source of data for defining control system requirements for such a vehicle.

The HL-10 was built under contract and delivered to the National Aeronautics and Space Administration in March of 1966 for experimental flight testing at subsonic and low supersonic speeds. Simplicity and reliability were emphasized in the design of the HL-10's flight control system, so standard aircraft design practices and existing hardware were utilized wherever possible. This paper describes the flight control system and discusses the system's performance in flight and during ground tests. The flight program was conducted jointly by the U.S. Air Force Flight Test Center and the NASA Flight Research Center at Edwards Air Force Base, Calif.

SYMBOLS

Physical quantities in this report are given in the International System of Units (SI) and parenthetically in U.S. Customary Units. Measurements were taken in Customary Units. Factors relating the two systems are presented in reference 4.

b	body reference span, m (ft)
I_X	moment of inertia of the vehicle about the X-axis, kg-m^2 (slug-ft^2)
I_Y	moment of inertia of the vehicle about the Y-axis, kg-m^2 (slug-ft^2)
I_Z	moment of inertia of the vehicle about the Z-axis, kg-m^2 (slug-ft^2)
K_p	roll damper gain, $\frac{\delta_a}{p}$, deg/deg/sec

K_q	pitch damper gain, $\frac{\delta_e}{q}$, deg/deg/sec
K_r	yaw damper gain, $\frac{\delta_r}{r}$, deg/deg/sec
L_{δ_a}	roll control power, $\frac{\text{Rolling moment per } \delta_a}{I_X}$, rad/sec^2/rad
M_{δ_e}	pitch control power, $\frac{\text{Pitching moment per } \delta_e}{I_Y}$, rad/sec^2/rad
N_{δ_r}	yaw control power, $\frac{\text{Yawing moment per } \delta_r}{I_Z}$, rad/sec^2/rad
p	rolling velocity, deg/sec
q	pitching velocity, deg/sec
r	yawing velocity, deg/sec
S	body planform reference area, m^2 (ft^2)
s	Laplace variable
$\Delta p, \Delta q, \Delta r$	limit-cycle peak-to-peak roll rate, pitch rate, and yaw rate amplitude, respectively, deg/sec
δ_a	lateral control deflection, $\delta_{a_L} - \delta_{a_R}$, deg
δ_e	longitudinal control deflection, $\frac{\delta_{e_L} + \delta_{e_R}}{2}$, deg
δ_r	rudder deflection, $\delta_{r_L} + \delta_{r_R}$, deg

Subscripts:

L	left
R	right

DESCRIPTION OF THE VEHICLE AND FLIGHT CONTROL SYSTEMS

The HL-10 lifting body vehicle (fig. 1) is basically a flat-bottomed, boattailed, negative-cambered airfoil. It is 6.45 meters (21.17 feet) long and 4.15 meters (13.6 feet) wide. Two end-plate fins with outboard-cambered leading edges and a vertical centerline fin are located near the rear of the vehicle. The single-place vehicle has a conventional tricycle landing gear which can be extended in flight (prior to touchdown) but cannot be retracted in flight. The vehicle's launch weight during the powered-flight program was approximately 35,586 newtons (8000 pounds), and its landing weight was approximately 26,690 newtons (6000 pounds). Additional vehicle physical characteristics are listed in table 1.

Primary Flight Control System

The primary flight control system is an irreversible, dual, electromechanical hydraulic system with an artificial feel system. The irreversible characteristic of the hydraulic system holds the control surfaces steady against forces that do not originate in pilot control movement and prevents such forces from being transmitted back to the pilot's controls.

Aerodynamic control is provided by 10 control surfaces (figs. 2(a) and 2(b)): two elevons, two elevon flaps (one on each elevon), four tip fin flaps (two inboard and two outboard), and two rudder surfaces. The geometry of the aft end (boattail) of the vehicle can be varied by moving the rudders and the flaps on the elevons and tip fins. For subsonic flight (fig. 2(a)) the flaps and rudders are boattailed (fully retracted), which causes the vehicle to be shaped like an airfoil. When the flaps are fully extended (fig. 2(b)), the control surfaces form a shape like a wedge, which is necessary for transonic flight to improve stability and control. In this configuration each rudder is extended 8°. The rudders can be further extended, to 32° each, for use as speed brakes. The flaps are operated by electric motors and jackscrews, and are controlled by switches in the cockpit. The speed brakes are operated by utilizing the main rudder actuators, which are driven by electric motors and jackscrews, and they are controlled by a switch on the landing rocket throttle handle in the cockpit. Control-surface authorities are shown in table 2.

The vehicle has a conventional fighter airplane cockpit (figs. 3(a) to 3(c)) with a standard control stick and rudder pedals. As shown in figure 4, a diagram of the flight control system, the control stick is connected by cables and push rods to the hydraulic control valves on the actuators located at the right and left elevons. Moving the stick positions the control valves so that hydraulic power is directed to the control-surface actuators to move the control surfaces. A mechanical followup system shuts off the flow of hydraulic fluid to the actuators when the desired control-surface deflection is reached.

Forward and aft control stick motion causes synchronous elevon operation for pitch control. Aft stick travel causes the left and right elevon surfaces to deflect trailing edge up with reference to the bottom contour of the vehicle, and forward stick travel causes the left and right elevon surfaces to deflect trailing edge down with reference to the bottom contour of the vehicle.

Left or right control stick motion causes differential elevon operation for roll control.

Rudder pedal motion causes the two panels of the split rudder on the center vertical fin to operate in unison for yaw control.

Control System Configuration

The changes made to the control system configuration for flights 1 to 14 are presented in table 3. No changes were necessary after flight 14. The longitudinal control surface to stick gearing changes are shown in figure 5(a), and the longitudinal force gradient is shown in figure 5(b). The lateral control surface to stick gearing is shown in figure 6(a), and the lateral force gradient is shown in figure 6(b). The directional control surface to pedal gearing is shown in figure 7(a), and the directional force gradient is shown in figure 7(b).

Artificial Feel and Trim Systems

The artificial feel system gives the pilot a sense of control feel under all flight conditions. Stick and rudder pedal forces were provided by coil spring bungees in the control system. The bungees apply loads to the pilot's controls in proportion to stick or pedal movement, but the resultant feel has no relation to actual air loads.

Pitch and roll trim are achieved by moving the four-position switch at the top of the control stick. Activating the switch energizes an electric motor which changes the neutral position of the coil spring bungees connected to the control stick. A yaw trim switch on the left console permits the neutral force position of the rudder pedals to be adjusted.

Stability Augmentation System

The stability augmentation system (SAS) provides damping for the aerodynamic flight control system in the pitch, roll, and yaw axes. The system has a monitor channel in each axis to detect malfunctions in the primary channel and to provide fail-operate in pitch and fail-safe in roll and yaw. The intent of the system's design is to insure that no single failure disables both the primary and the backup channels.

Internally, the power distribution circuitry is such that the pitch and roll primary channels are separate from the pitch and roll backup channels and the yaw primary channel. A functional block diagram of the SAS is shown in figure 8. The five functional channels, two (primary and backup) in pitch and roll and one (primary) in yaw, consist of a rate gyro, an electrical assembly, a protective circuit, and a hydraulic actuator. The feedback signal from the actuator is compared with the signal from a model of the actuator in the monitor channel. When the difference between the feedback signal and the model signal exceeds a certain (adjustable) threshold, the monitor senses an error and switches either to the backup channel (for pitch and roll) or off (for yaw).

The yaw axis electronics incorporate a high-pass filter for the washout of steady rates. The filter permits the desired high-frequency signals from the gyro for vehicle

damping to pass, and blocks unwanted steady-state signals from the gyro during turns.

The control switches for the SAS are in the cockpit on the left console. The on-off switches are magnetically held when the on position is selected, and protective circuits around the servoactuator drive circuit cause the switch to disengage if a malfunction occurs. Voltage-sensitive circuits are used.

If a discrepancy occurs between the primary and monitor channels in the pitch axis, the system automatically switches to the pitch backup channel, and a warning light on the pilot's instrument panel lights. The pilot has a three-position toggle switch for the pitch axis. (The spring is loaded to the primary.) The positions are reset (forward), primary (intermediate), and backup (aft). The primary (intermediate) switch position is normal. After a malfunction, the pilot can reset the system in the primary mode by pushing the switch forward and releasing it. To switch to the backup mode, he moves the toggle aft.

If a malfunction occurs in the roll axis, the primary channel goes off and the pilot has the option of selecting the roll backup channel manually by placing the roll backup switch in the on position. The yaw axis does not have a backup channel.

The SAS gain selector switch in each axis controls the ratio of surface displacement to the angular rate signal through a variable resistor. The selector switch has 11 positions, 0 to 10, and system gain increases linearly to a maximum of 1 deg/deg/sec at position 10 in all three axes.

Hydraulic Power Supply Systems

The vehicle has two 20.685×10^6 N/m^2 (3000 lb/in^2) hydraulic systems (fig. 9). The two systems have independent electric power and hydraulic pumps, but operate simultaneously to supply vehicle hydraulic pressure. With both hydraulic systems operating, the control system has full hinge-moment and maximum rate capability. If one hydraulic system fails, the control system has only one-half the hinge-moment capability but the same maximum rate capability. The number 1 hydraulic system serves as the sole power source for the pitch and roll SAS servoactuators, with a ram air turbine backup hydraulic system. The number 2 hydraulic system provides the sole hydraulic power source for the yaw SAS servoactuator.

SYSTEM DEVELOPMENT PROBLEMS

Stability Augmentation System Hardware Problems

The HL-10's original SAS equipment was identical to that used in the M2-F2 lifting body vehicle except for the structural filters. Experience with the SAS in the M2-F2 (ref. 1) revealed certain deficiencies in the roll and yaw SAS channels, such as poor monitor channel tracking and nuisance disengagements. It was decided to correct these problems early in the HL-10 program, although not necessarily for the first flight. The SAS configuration for the HL-10's glide flight envelope was much the same as it was for the M2-F2's. Problems did occur during the first flight, such as aft end separation

over the elevons (ref. 2), control system limit cycles, and oversensitivity in longitudinal control. After an assessment of the problems encountered during the first flight, and a reassessment of the known deficiencies, modifications were made.

When the reliability and operational integrity of the modified SAS were reviewed, a deficiency was discovered in the design of the monitor channels. The system had monitor channels in pitch, roll, and yaw so that no single failure could disable the total system. However, the monitor channels did not track the primary channels properly, with the result that continuous nuisance tripouts occurred in pitch, roll, and yaw stability augmentation. A failure in either the 15 Vdc or the -15 Vdc power supply would have caused a hard-over condition in all three axes. In addition, a single failure in any of the other monitor power supplies (±12 Vdc, -6 Vdc, 40 Vdc, or 7.5 Vac) would have caused a loss of operation in all three working channels. Rather than make major modifications to the monitor box, which would have meant a long delay in the flight program, the roll and yaw monitor channels were deactivated by removing the roll and yaw circuit boards from the monitor box, and a maximum effort was made to keep the monitor channel in the pitch axis working during flight.

Another problem was discovered when the pitch backup mode was engaged while the primary channel was engaged. It took approximately 4 seconds for the pitch magnetic switch to disengage. During this time, the circuit to the pitch SAS servo was open, causing the elevon control surfaces to move with the drifting SAS servo. Minor circuit changes were necessary to change the tripout voltage level which activated the pitch backup reset switch. The total delay for the transfer was reduced to 400 milliseconds, which was the time it took for the elevon surfaces to reach 40 percent of the limited SAS authority at maximum slew rate. This delay was considered operationally acceptable.

Closed-Loop Ground Tests

During the ground tests of the modified SAS, a structural mode vibration was encountered in the pitch and roll axes. The structural vibrations were excited by placing the SAS gains at 1.0 deg/deg/sec and applying a momentary torquing signal to the gyro. Vibrations from the control surfaces were sensed by the gyros, which transmitted signals to the control surfaces through the SAS. A self-sustained control-surface oscillation resulted.

The structural resonance frequencies were found to be 24 hertz in the pitch axis and 30 hertz in the roll axis. These resonance frequencies were high enough to be filtered without seriously degrading the control system's response at the lower SAS operating frequencies as shown by the pitch and roll frequency response plots in figures 10(a) and 10(b).

These figures show that the phase lag was reduced and the amplitude ratio in the SAS operating frequencies was increased by the modification of the pitch and roll SAS. The modification was accomplished by using lead networks and notch filter networks in the electronics portion of the SAS. As shown in figure 10(c), no structural resonance problems were encountered in the yaw axis, so no modifications were necessary.

Limit Cycles

The parameters that most affect limit cycles are total loop gain and the phase lag of individual SAS components (refs. 5 and 6). Total loop gain is a combination of SAS gain setting and control effectiveness. Control effectiveness consists of the control derivative and dynamic pressure.

Limit-cycle tests were conducted by using an analog computer to simulate the aerodynamic loop around the SAS as shown in figure 11. A simplified transfer function relating to the surface deflection was used.

For pitch

$$\frac{q(s)}{\delta_e(s)} = \frac{M_{\delta_e}}{s}$$

For roll

$$\frac{p(s)}{\delta_a(s)} = \frac{L_{\delta_a}}{s}$$

For yaw

$$\frac{r(s)}{\delta_r(s)} = \frac{N_{\delta_r}}{s}$$

where the s term in the denominator contributed a phase angle lag of 90° between rate and surface deflection. The simplification was conservative, since the aerodynamic lag was probably less than 90°. The remaining 90° of phase lag necessary for a continuing limit-cycle oscillation came from the electronic filter, the power actuator, mechanical linkages, and the cleanliness of the hydraulic system which was necessary for the servoactuators to operate linearly.

Data from the ground tests showing the limit-cycle characteristics of the original and modified systems in the pitch, roll, and yaw SAS axes are presented in figures 12(a) to 12(c). With the modified system, operation was possible at higher system gains (control power multiplied by gain). A peak-to-peak limit-cycle amplitude of 0.5° has been shown in other flight tests at the Flight Research Center to be the maximum for safe flight (ref. 5).

FLIGHT-TEST EXPERIENCE

Before flight testing was started, the HL-10's control system was extensively tested on the ground. After system development problems were solved, the ground tests indicated that there were no instabilities in the basic flight control system.

During the first HL-10 glide flight, two problems associated with the flight control system were encountered: undesirable limit cycles, primarily in pitch, and

oversensitivity in longitudinal control. The limit cycles were only an annoyance to the pilot during the initial portion of the flight, but when the control power was higher, the limit cycles became large-amplitude oscillations. The highly sensitive pitch control compounded the problem. To arrest the limit-cycle oscillations, the pilot was forced to reduce the SAS gains and to continue the flight with less pitch damping despite the high control sensitivity. This resulted in pilot-induced oscillation tendencies during the approach and landing. The pitch limit cycle experienced during the first powered flight was found to be due to the presence of contaminated hydraulic fluid in the valve of the servoactuator, which caused the operation of the control system to be nonlinear. An operational procedure was established wherein additional preflight samples of the hydraulic fluid at the valve were taken to determine the level of hydraulic fluid contamination, and the problem did not recur.

After the first glide flight, several changes were made to the control system (table 3). The stick gearing was changed to give the pilot -24° of aft stick and 10° of forward stick. This gearing was evaluated during the next four flights, and longitudinal control was found to be less sensitive at low angles of attack, although it was still too sensitive during the landing portion of the flight. The gradient of the longitudinal gearing was then reduced, to -25° of aft and 3° of forward stick. This improved the handling qualities during the landing phase, but the vehicle was harder to fly at low angles of attack. The longitudinal changes between flights 1 and 9 were all linear changes, and since a flat slope was required for landing and a steeper slope was required for low angles of attack, nonlinear gearing was tried next. Nonlinear gearing was used for the remainder of the glide flight program and throughout the rocket-powered portion of the flight program (ref. 3).

The aileron authority was changed from 10° to 20° after the first flight. After the third flight the authority was again changed, to 12.5° of aileron for ± 7.62 centimeters (± 3 inches) of stick travel, and it remained at this level through flight 9. From flight 10 on, the lateral stick gearing was not changed, but the pilot's authority was increased to 17° with ± 10.16 centimeters (± 4.0 inches) of lateral stick travel.

CONCLUDING REMARKS

Flight- and ground-test experience with the HL-10 lifting body flight control system brought to light several problems that required correction in order to achieve satisfactory vehicle stability and control characteristics.

In general, the mechanical control system met the operational requirements of the test vehicle. The control stick gearing was made nonlinear to improve the vehicle's control sensitivity.

A severe limit cycle, or residual oscillation, was observed in the pitch axis during the first flight. Improved operational procedures resulted in reduced hydraulic fluid contamination levels and eliminated the limit cycle.

A structural resonance encountered in ground tests of the modified stability augmentation system was eliminated by filtering the electronic signals.

Flight Research Center
National Aeronautics and Space Administration
Edwards, Calif., September 14, 1973

REFERENCES

1. Painter, Weneth D.; and Kock, Berwin M.: Operational Experiences and Characteristics of the M2-F2 Lifting Body Flight Control System. NASA TM X-1809, 1969.

2. Harris, Charles D.: Transonic Aerodynamic Characteristics of a Manned Lifting Entry Vehicle With Modified Tip Fins. NASA TM X-1918, 1970.

3. Kempel, Robert W.; and Manke, John A.: Flight Evaluation of the HL-10 Lifting Body Handling Qualities at Mach Numbers From 0.30 to 1.86. NASA TN D-7537, 1973.

4. Mechtly, E.A.: The International System of Units - Physical Constants and Conversion Factors (Revised). NASA SP-7012, 1969.

5. Painter, Weneth D.; and Sitterle, George J.: Ground and Flight Test Methods for Determining Limit Cycle and Structural Resonance Characteristics of Aircraft Stability Augmentation Systems. NASA TN D-6867, 1972.

6. Kotfila, Ronald P.; and Painter, Weneth D.: Design, Development, and Flight Test Experience With Lifting Body Stability Augmentation Systems. AIAA Paper 69-887, 1969.

TABLE 1.- PHYSICAL CHARACTERISTICS OF THE HL-10 LIFTING BODY VEHICLE

Body -	
Reference planform area, m^2 (ft^2)	14.9 (160)
Length, m (ft)	6.45 (21.17)
Span, m (ft)	4.15 (13.6)
Aspect ratio (basic vehicle), $\frac{b^2}{S}$	1.156
Weight, including pilot, N (lb)	26,690 (6000)
Center of gravity, percentage of reference length	51.8
Elevons (two) -	
Area, each, m^2 (ft^2)	1.00 (10.72)
Reference area, m^2 (ft^2)	0.82 (8.89)
Span, each, parallel to hinge line, m (ft)	1.09 (3.58)
Chord, perpendicular to hinge line:	
Root, m (ft)	0.59 (1.93)
Tip, m (ft)	1.24 (4.06)
Reference chord, m (ft)	0.76 (2.48)
Elevon flaps (two) -	
Area, each, m^2 (ft^2)	0.70 (7.50)
Span, each, parallel to hinge line, m (ft)	1.09 (3.58)
Chord, perpendicular to hinge line:	
Root, m (ft)	0.48 (1.58)
Tip, m (ft)	0.80 (2.63)
Reference chord, m (ft)	0.64 (2.09)
Vertical stabilizer -	
Area, m^2 (ft^2)	1.47 (15.8)
Reference area, m^2 (ft^2)	1.38 (14.85)
Reference span, m (ft)	1.48 (4.84)
Height, trailing edge, m (ft)	1.53 (5.02)
Chord:	
Root, m (ft)	1.32 (4.32)
Tip, m (ft)	0.60 (1.97)
Reference mean aerodynamic chord, m (ft)	0.98 (3.23)
Leading-edge sweep, deg	25
Rudders (two) -	
Area, each, m^2 (ft^2)	0.41 (4.45)
Height, each, m (ft)	1.26 (4.12)
Chord, m (ft)	0.33 (1.08)
Outboard tip fin flaps (two) -	
Area, each, m^2 (ft^2)	0.35 (3.77)
Height, hinge line, m (ft)	1.37 (4.50)
Chord, perpendicular to hinge line, m (ft)	0.26 (0.84)
Inboard tip fin flaps (two) -	
Area, each, m^2 (ft^2)	0.23 (2.48)
Height, hinge line, m (ft)	1.01 (3.31)
Chord, perpendicular to hinge line, m (ft)	0.23 (0.75)

TABLE 2.- HL-10 CONTROL-SURFACE AUTHORITY

Surface	Input	Travel, deg	Rate, deg/sec
Elevon	Pitch trim switch Pitch control stick Pitch SAS Aileron trim switch Aileron control stick Roll SAS	-19 to 6 -24 to 13 ±5 ±5 ±17 ±5	2 25 25 0.6 50 50
Elevon flaps	Switch	0 to 29	3
Tip fin flaps Outboard Inboard	Switch	 0 to 32 0 to 30	 3 3
Rudder	Rudder trim switch Pedal Yaw SAS	±5 ±10 ±5	1 25 25
Speed brakes	Switch	0 to 32	3

TABLE 3.- HL-10 CONTROL SYSTEM CONFIGURATION CHANGES

Flight number	Total δ_e, deg	Total δ_a, deg		Total δ_r, deg		Available tip fin, percent	Available elevon flap, percent	Speed brakes, each surface, deg	Stick travel authority					
									Pitch, cm (in.)		Roll, cm (in.)		Yaw, cm (in.)	
		Left	Right	Left	Right				Forward	Aft	Left	Right	Left	Right
1	-26 to 36.2	12.2	12.8	9.6	10.9	0 to 100	0 to 100	0 to 32	7.62 (3.0)	15.24 (6.0)	6.60 (2.6)	8.26 (3.3)	7.87 (3.1)	7.87 (3.1)
2	-25 to 10	20	18.5						9.91 (3.9)	13.21 (5.2)	7.62 (3.0)	6.86 (3.0)		
3		20	18.5											
4		11.2	13			11 to 100	17 to 100				6.60 (2.6)	7.62 (3.0)		
5									9.65 (3.8)	13.72 (5.4)				
6	-26 to 3.8													
7														
8														
9									9.91 (3.9)	13.46 (5.3)	10.41 (4.1)	10.16 (4.0)		
10	-23.7 to 13.2	17.4	17.2											
11														
12														
13														
14														

Figure 1. HL-10 lifting body research vehicle.

E-19010

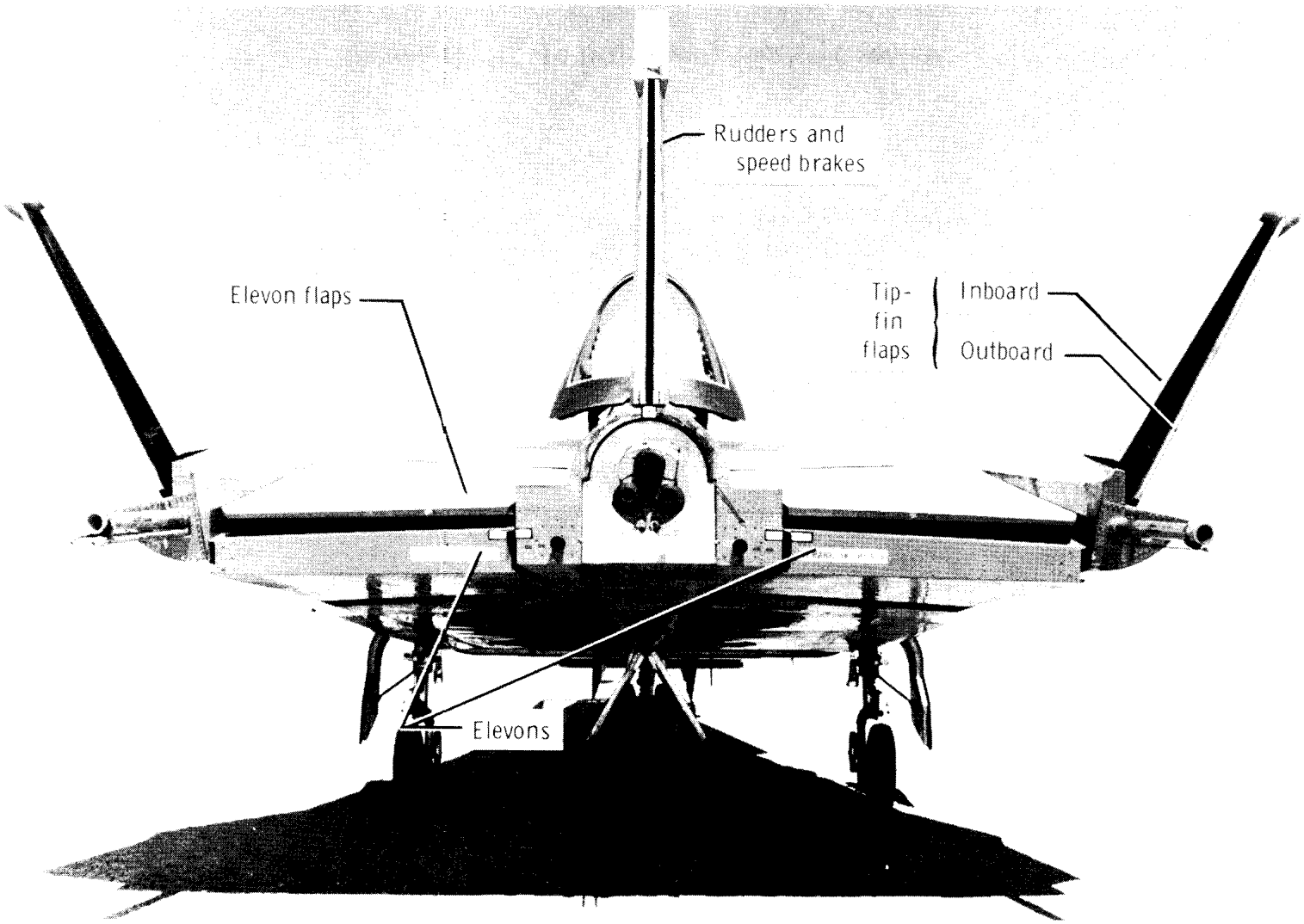

(a) Subsonic configuration.

Figure 2. Rear view of HL-10 lifting body.

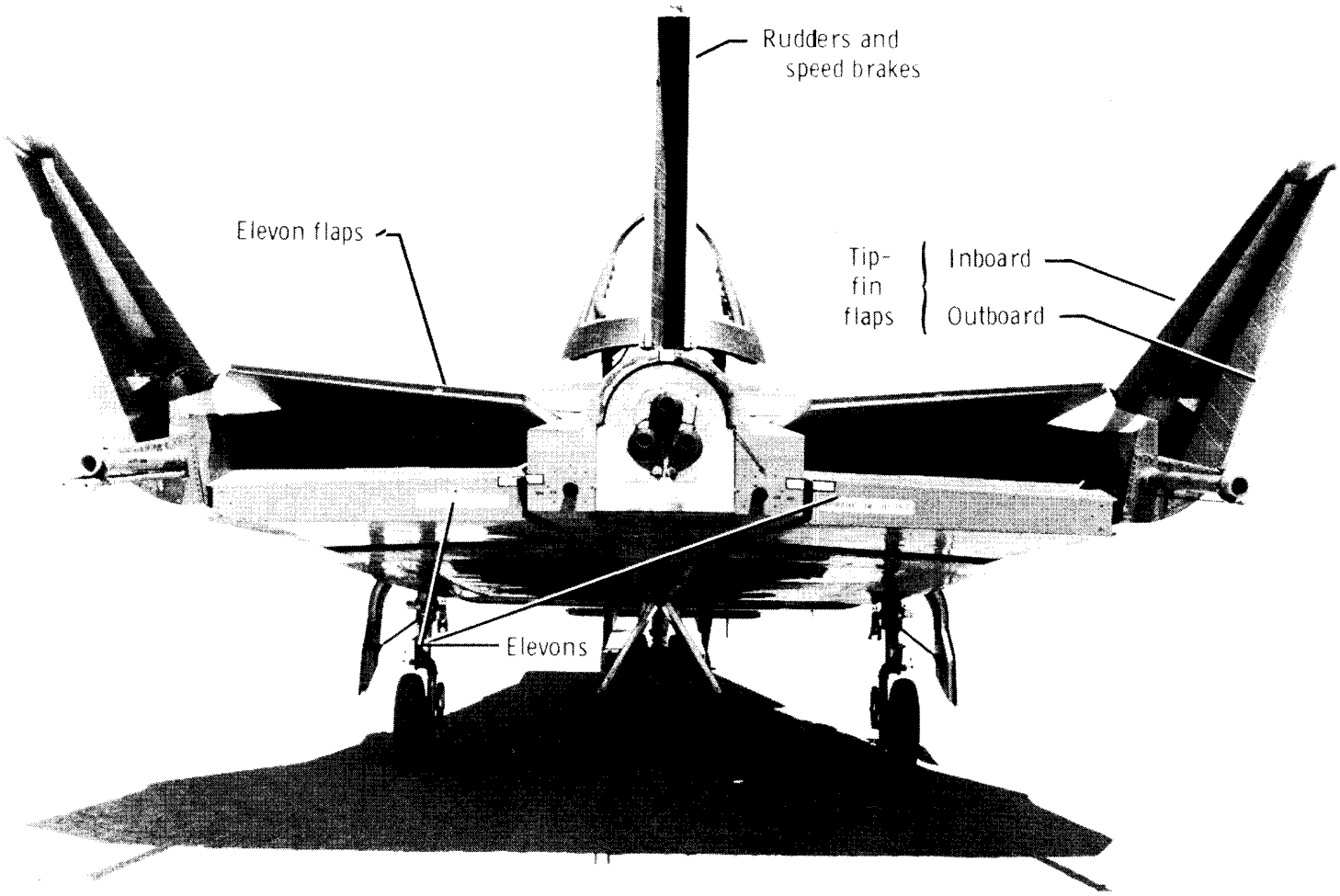

(b) Transonic configuration.

Figure 2. Concluded.

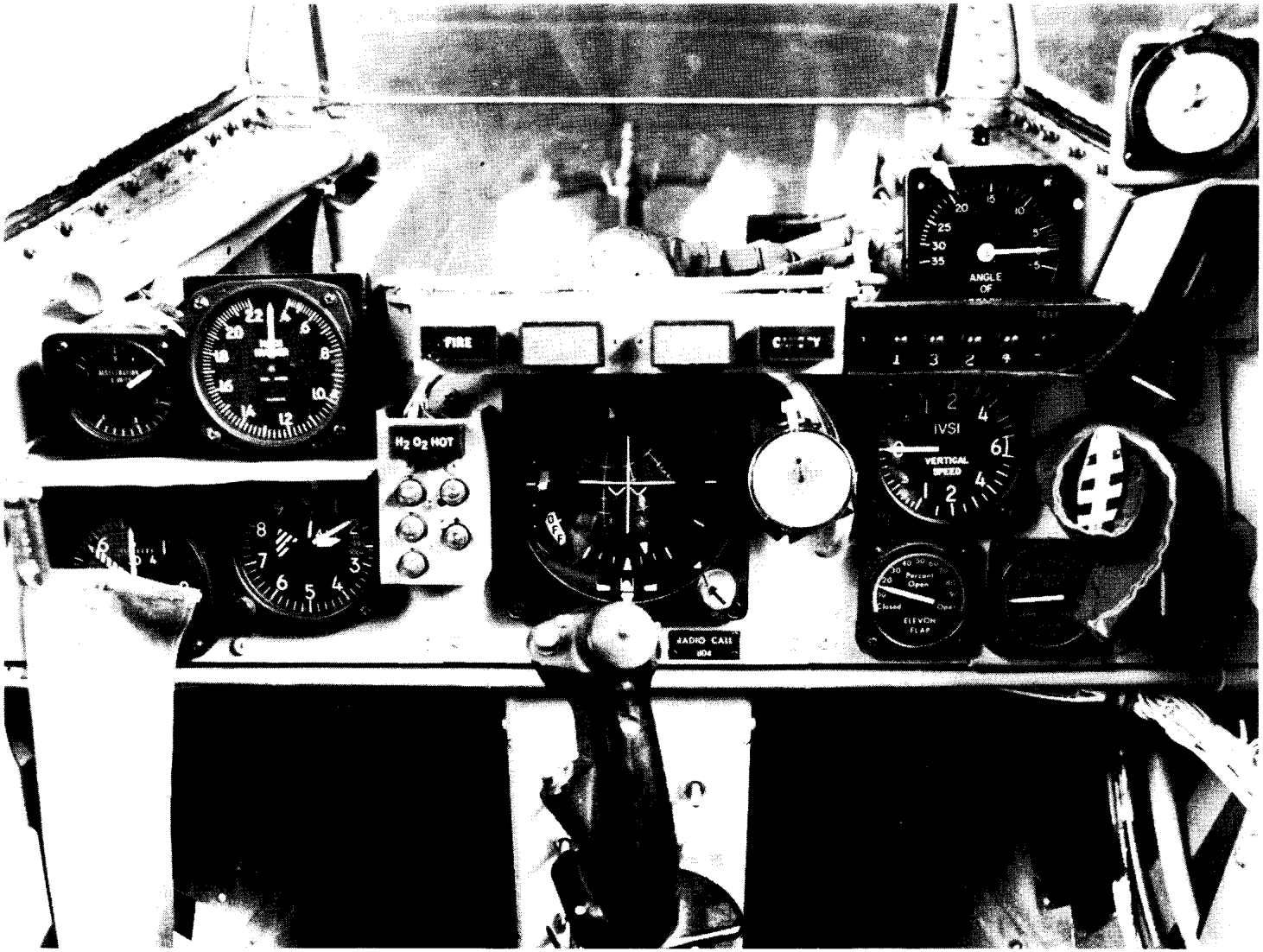

E-20303

(a) Forward view.

Figure 3. HL-10 cockpit arrangement.

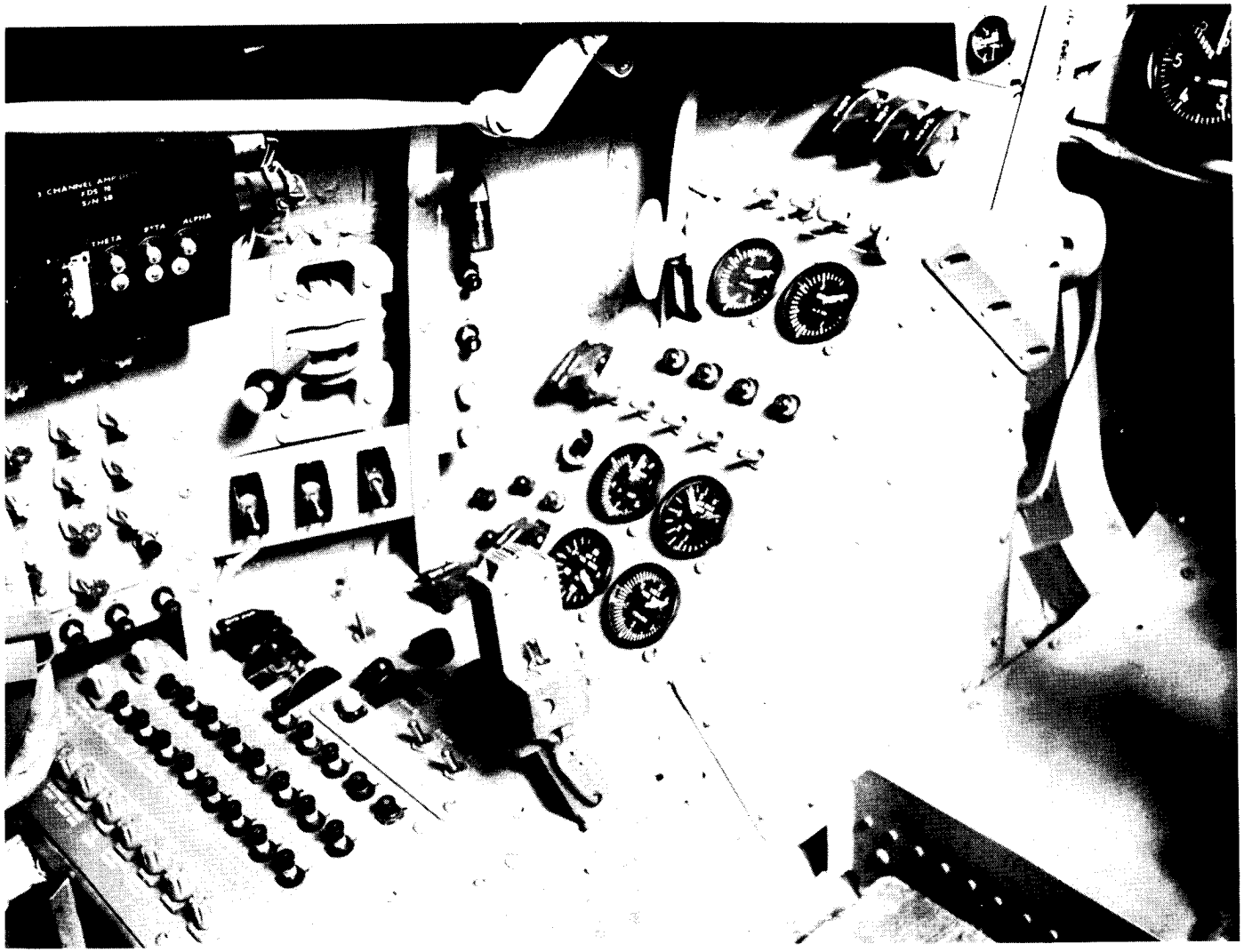

E-20301

(b) Left console.

Figure 3. Continued.

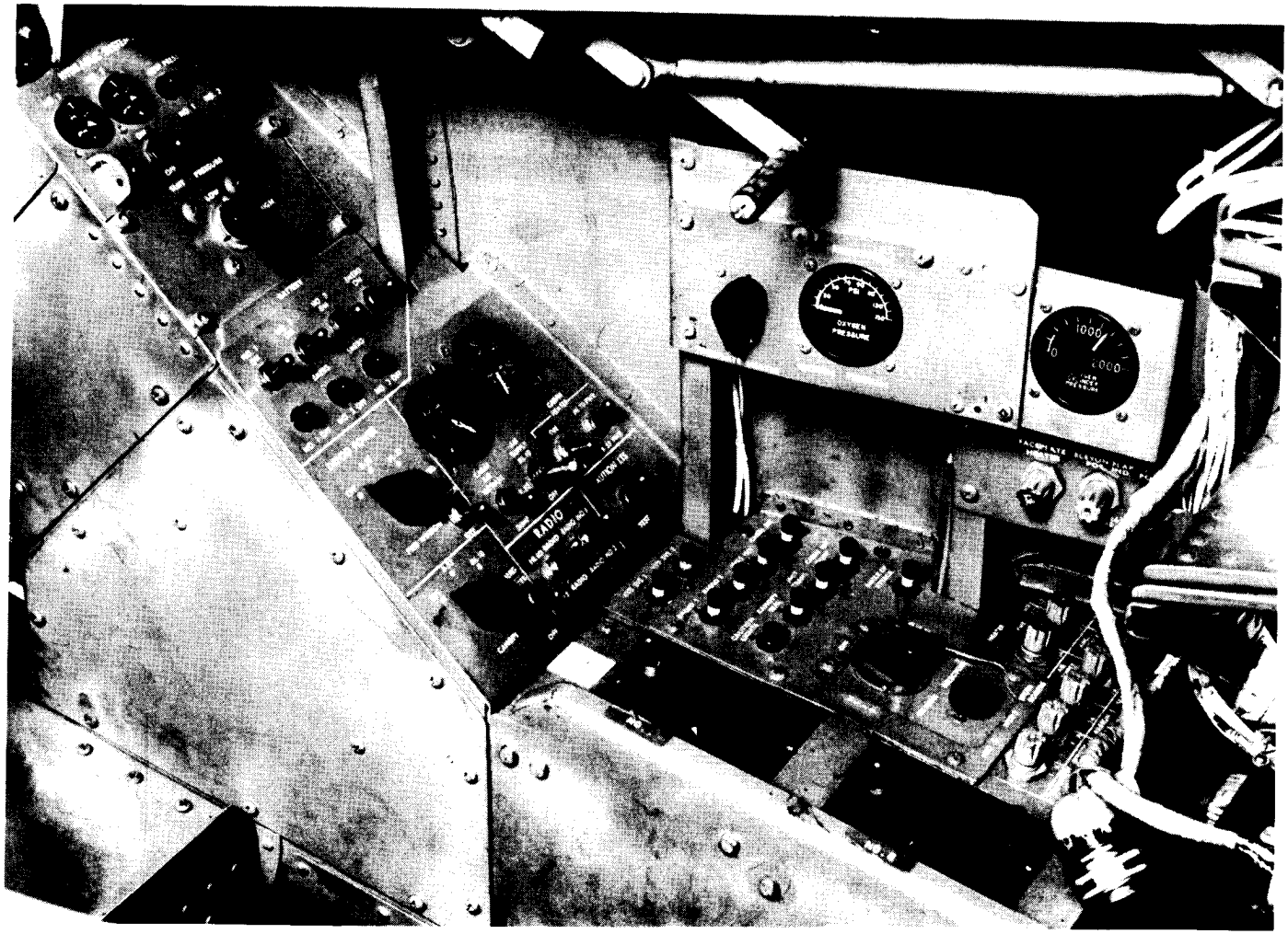

(c) Right console.

E-20302

Figure 3. Concluded.

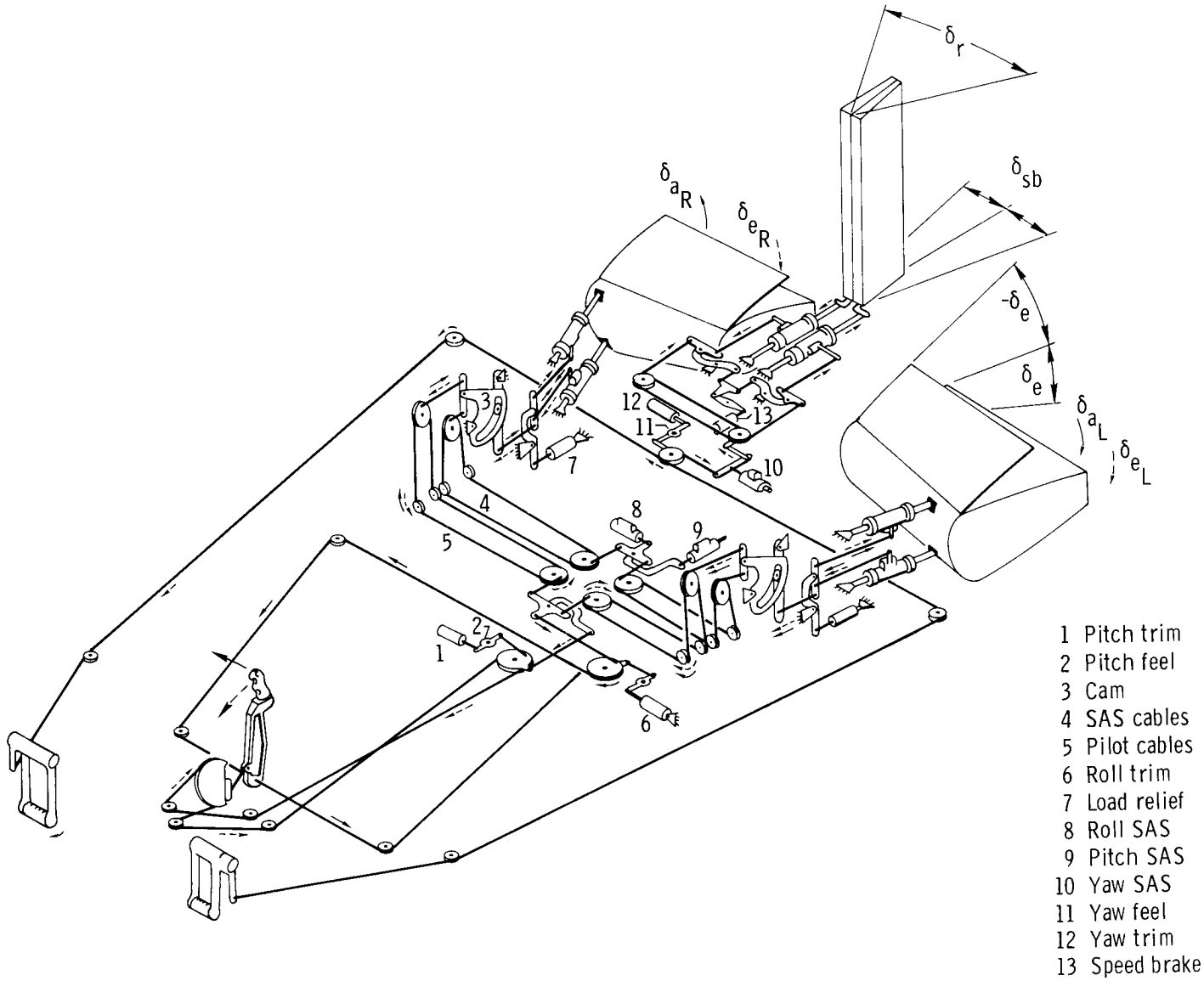

Figure 4. Flight control system.

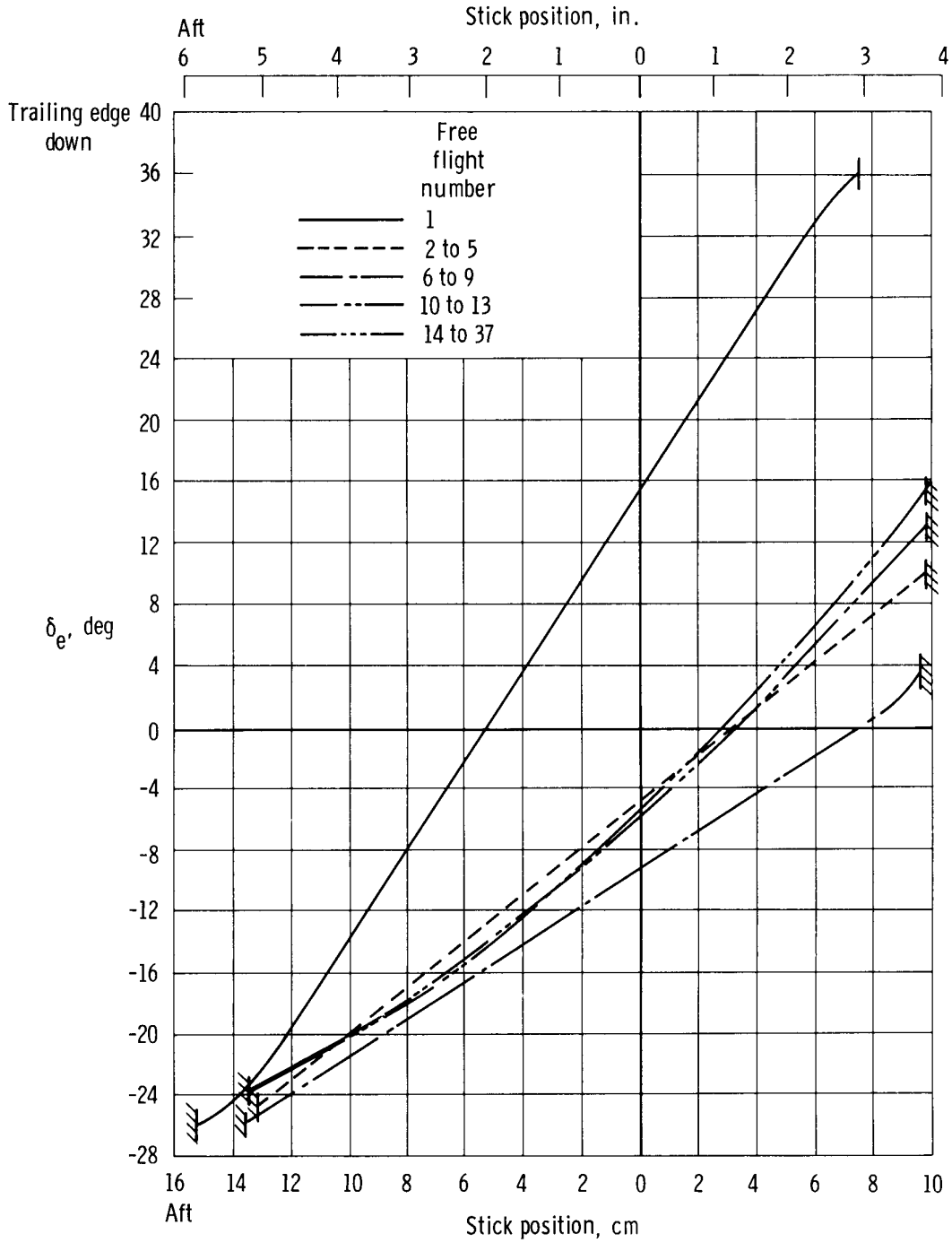

(a) Elevon deflection.

Figure 5. Longitudinal elevon deflection and longitudinal stick force as a function of stick position. Measured at the pilot's grip.

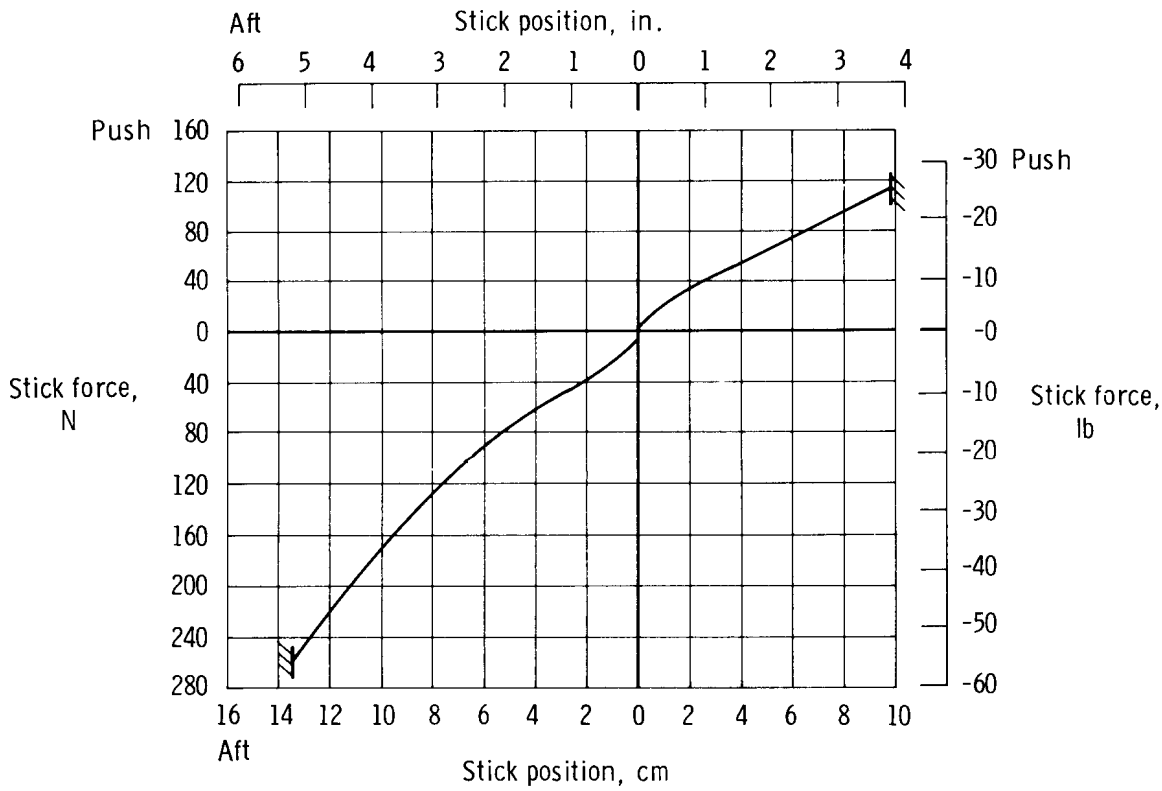

(b) Stick force.

Figure 5. Concluded.

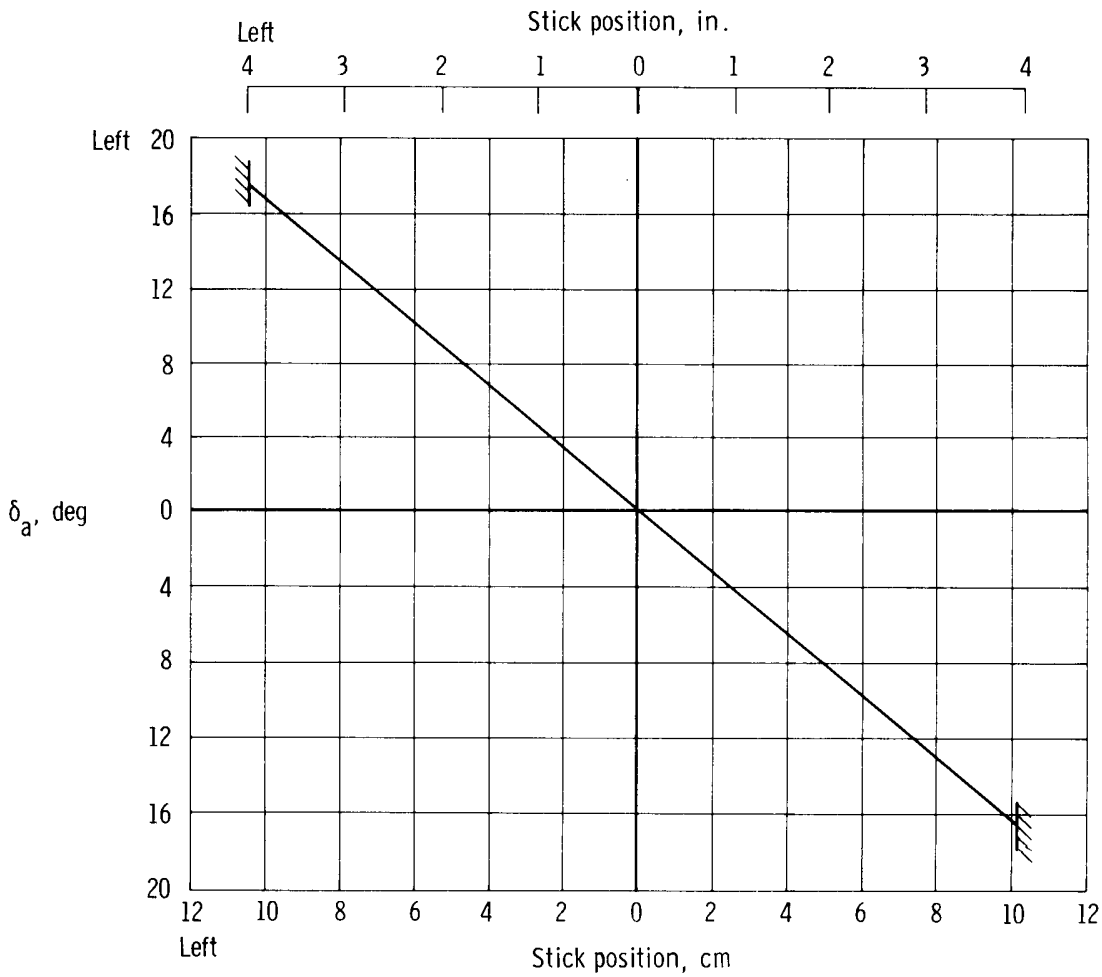

(a) Aileron deflection.

Figure 6. Aileron deflection of elevons and lateral stick force as a function of stick position. Measured at the pilot's grip.

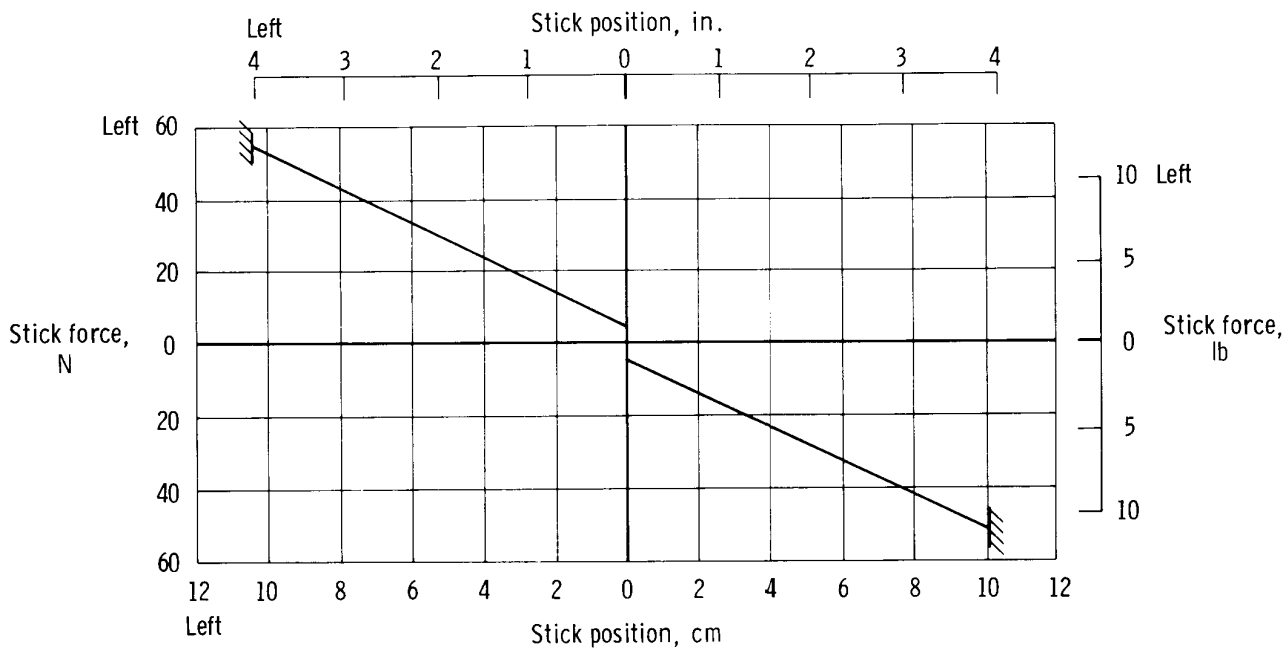

(b) Stick force.

Figure 6. Concluded.

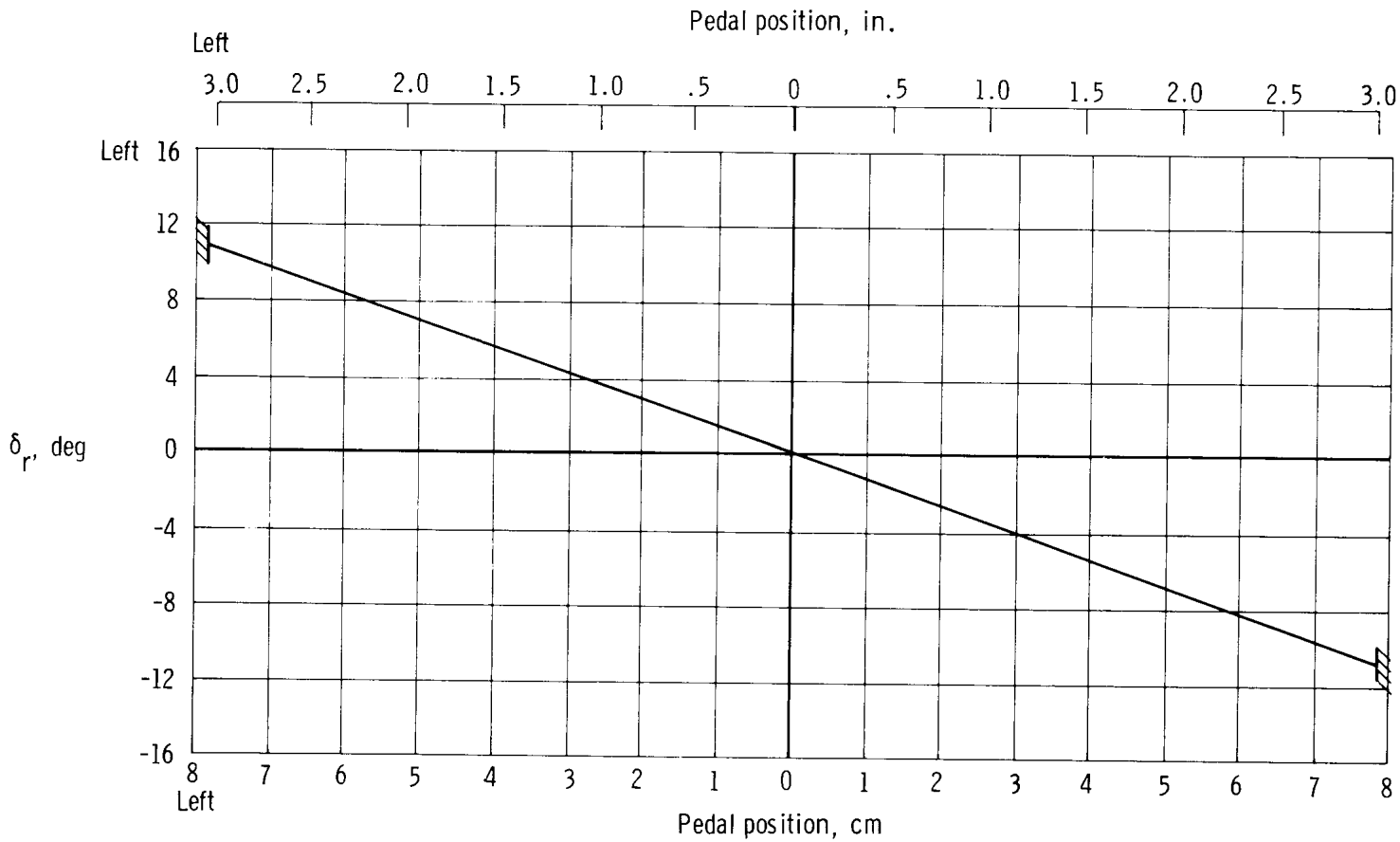

(a) Rudder deflection.

Figure 7. Rudder surface deflection and pedal force as a function of pedal position.

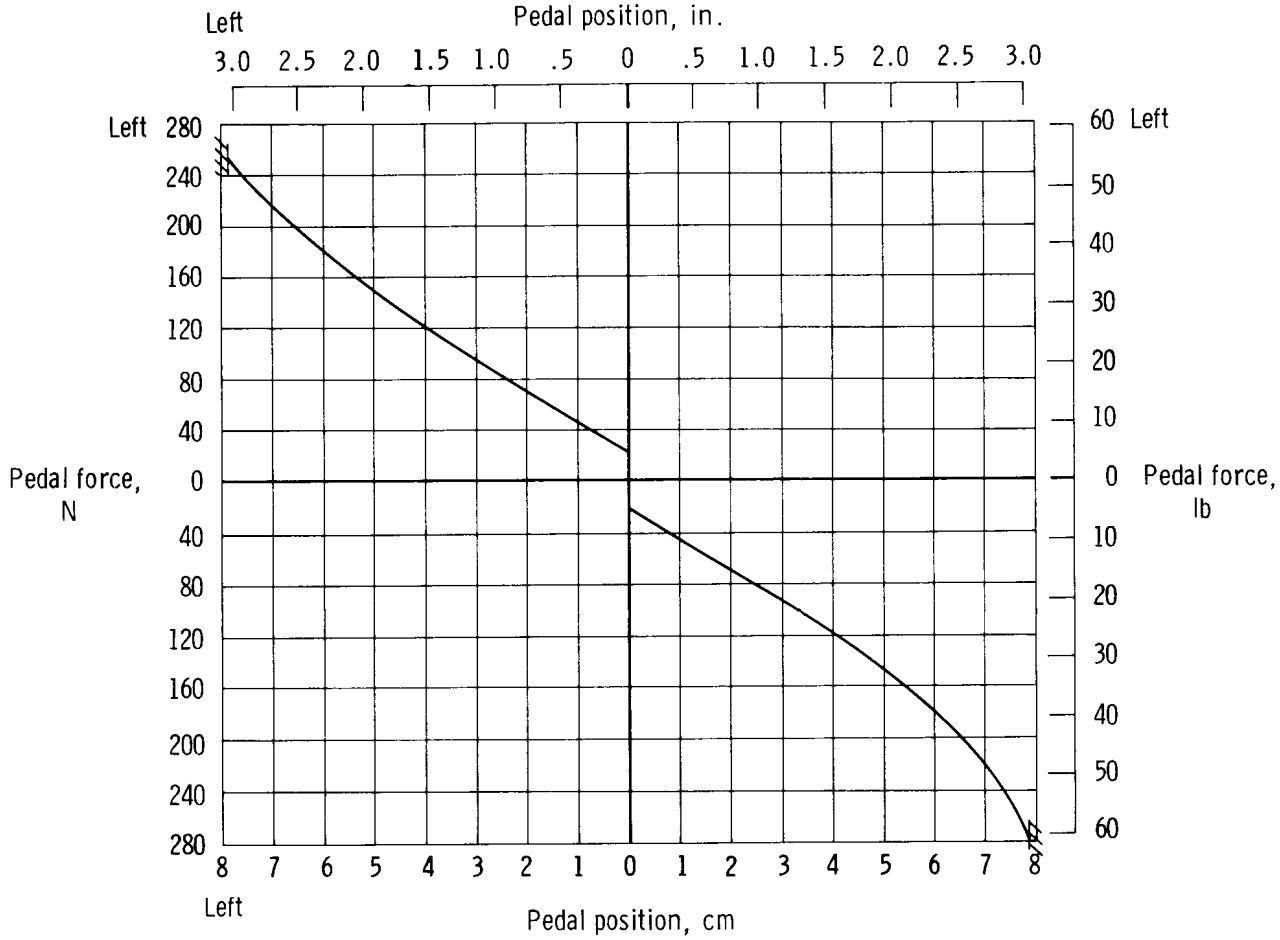

(b) Pedal force.

Figure 7. Concluded.

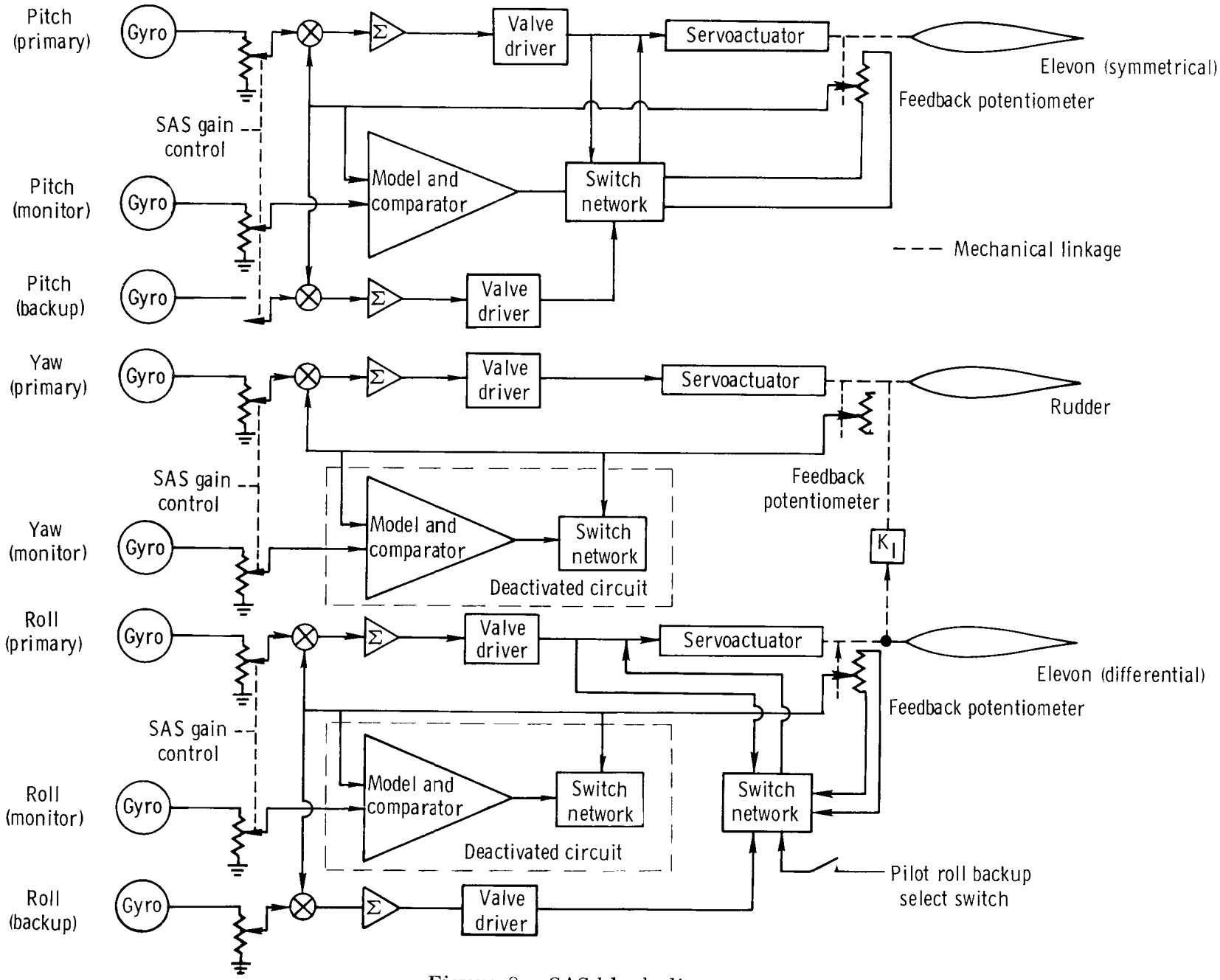

Figure 8. SAS block diagram.

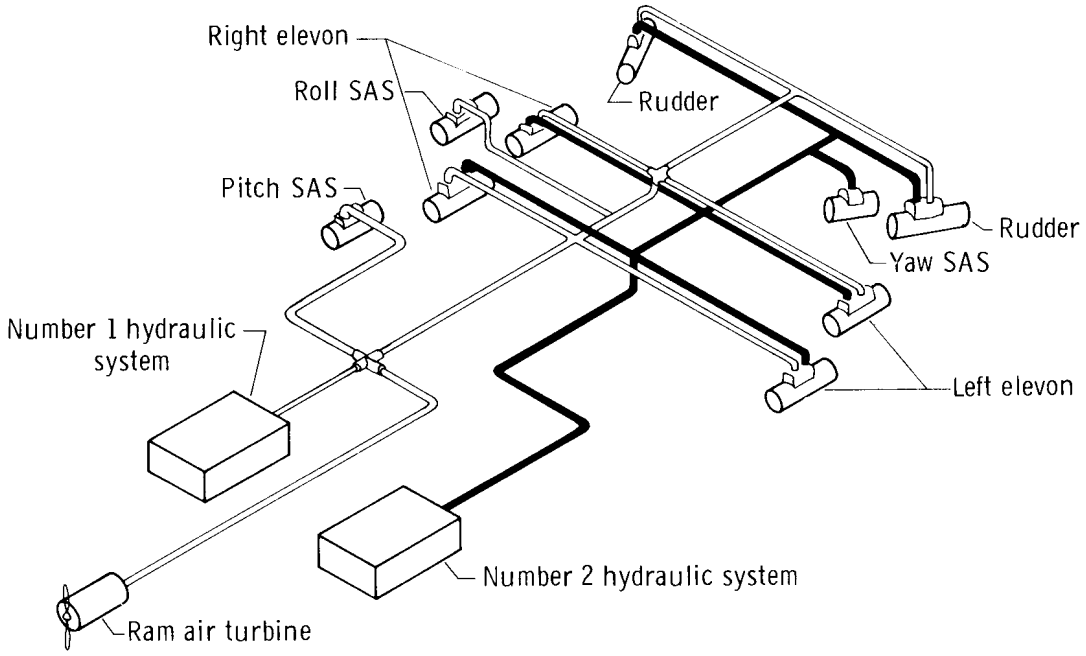

Figure 9. Schematic of vehicle hydraulic systems. (Return lines not shown.)

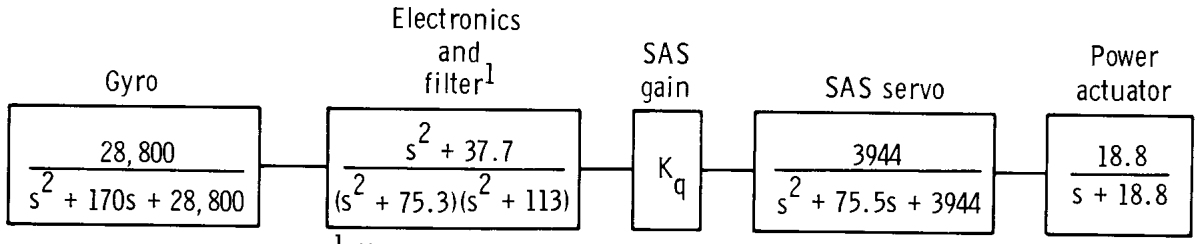

[1]Filter was used on the modified system only.

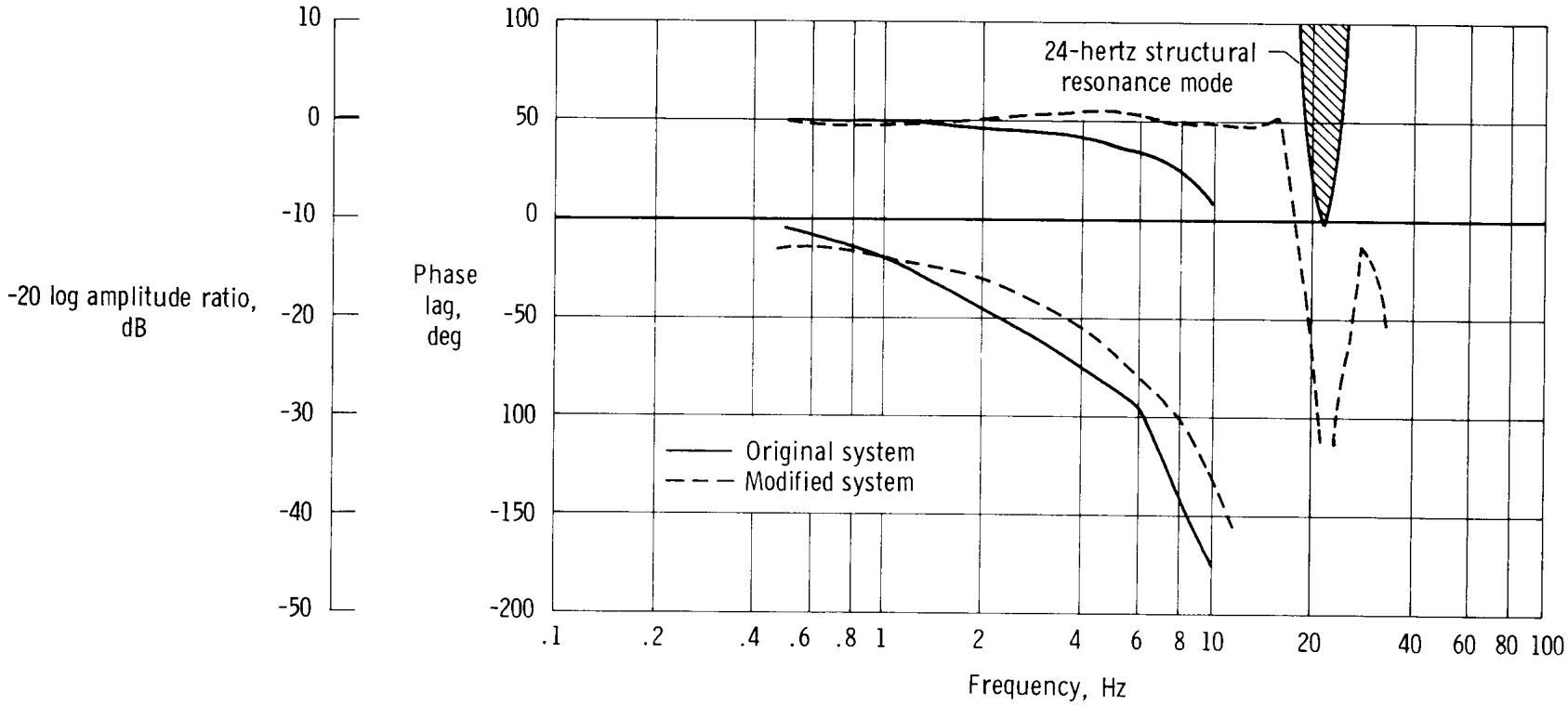

(a) Pitch SAS.

Figure 10. Measured open-loop frequency response of the pitch, roll, and yaw SAS from gyro to elevon surface.

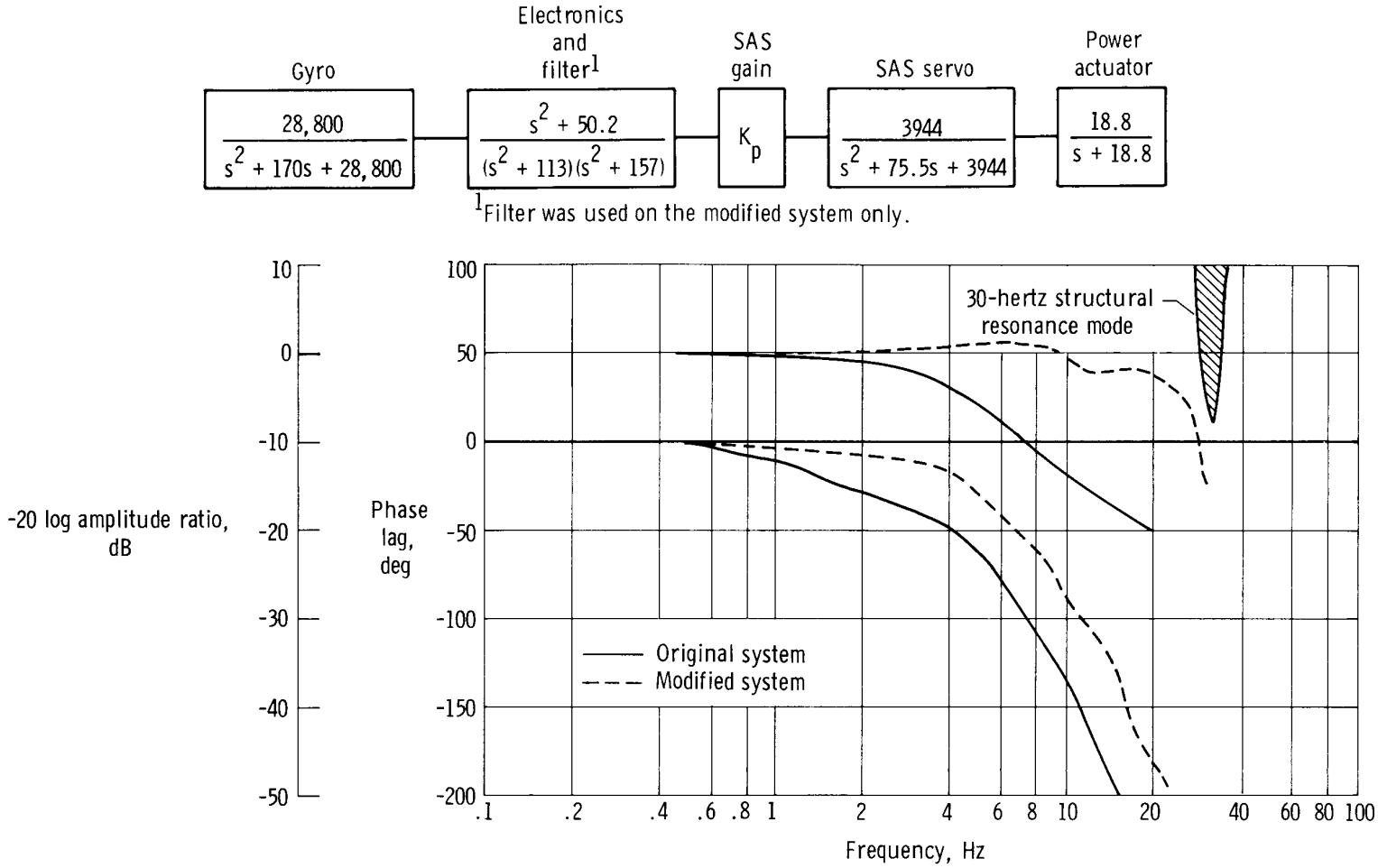

(b) Roll SAS.

Figure 10. Continued.

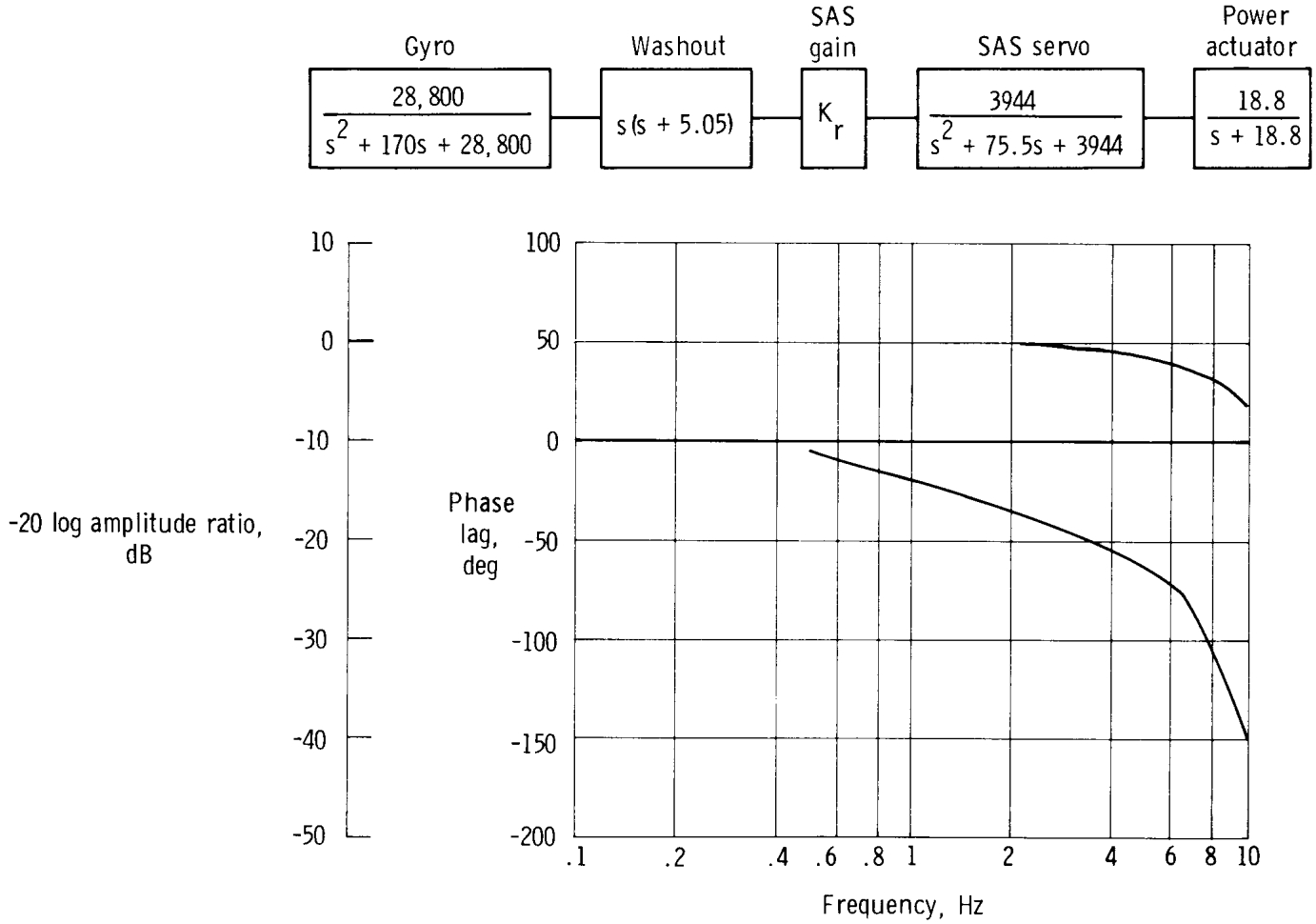

(c) Yaw SAS.

Figure 10. Concluded.

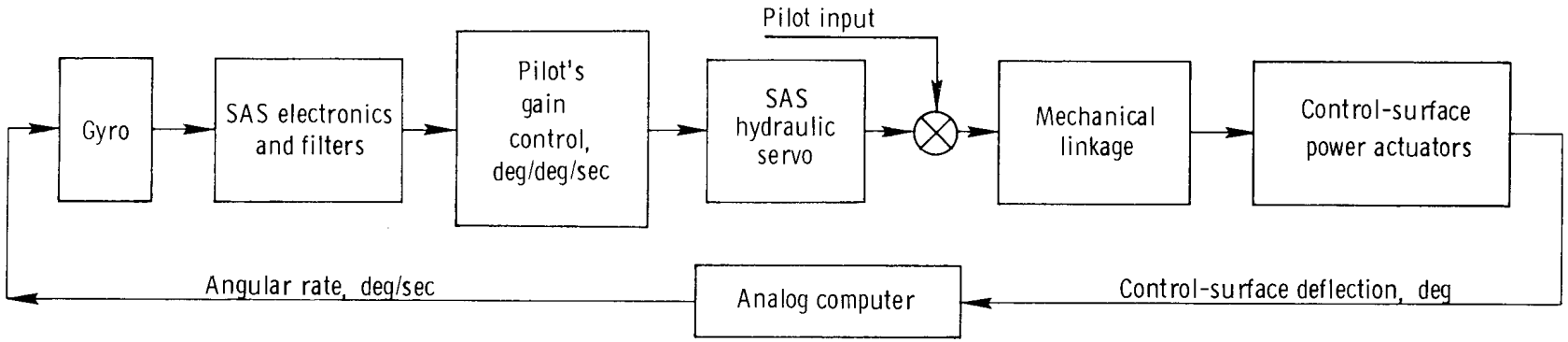

Figure 11. Block diagram of control system and external components used in SAS limit-cycle tests.

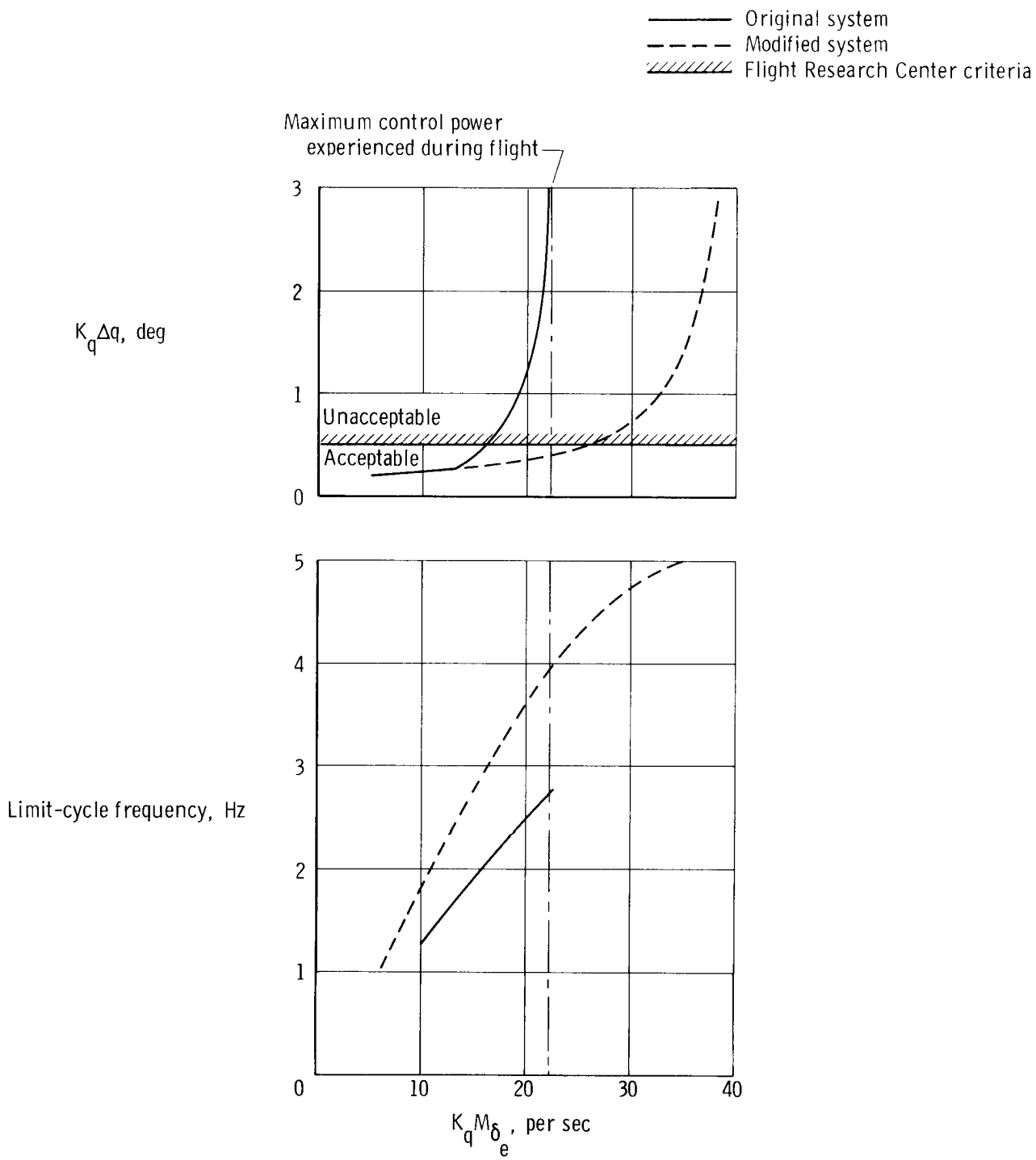

(a) Pitch axis.

Figure 12. Limit-cycle characteristics of the pitch, roll, and yaw axes based on ground tests.

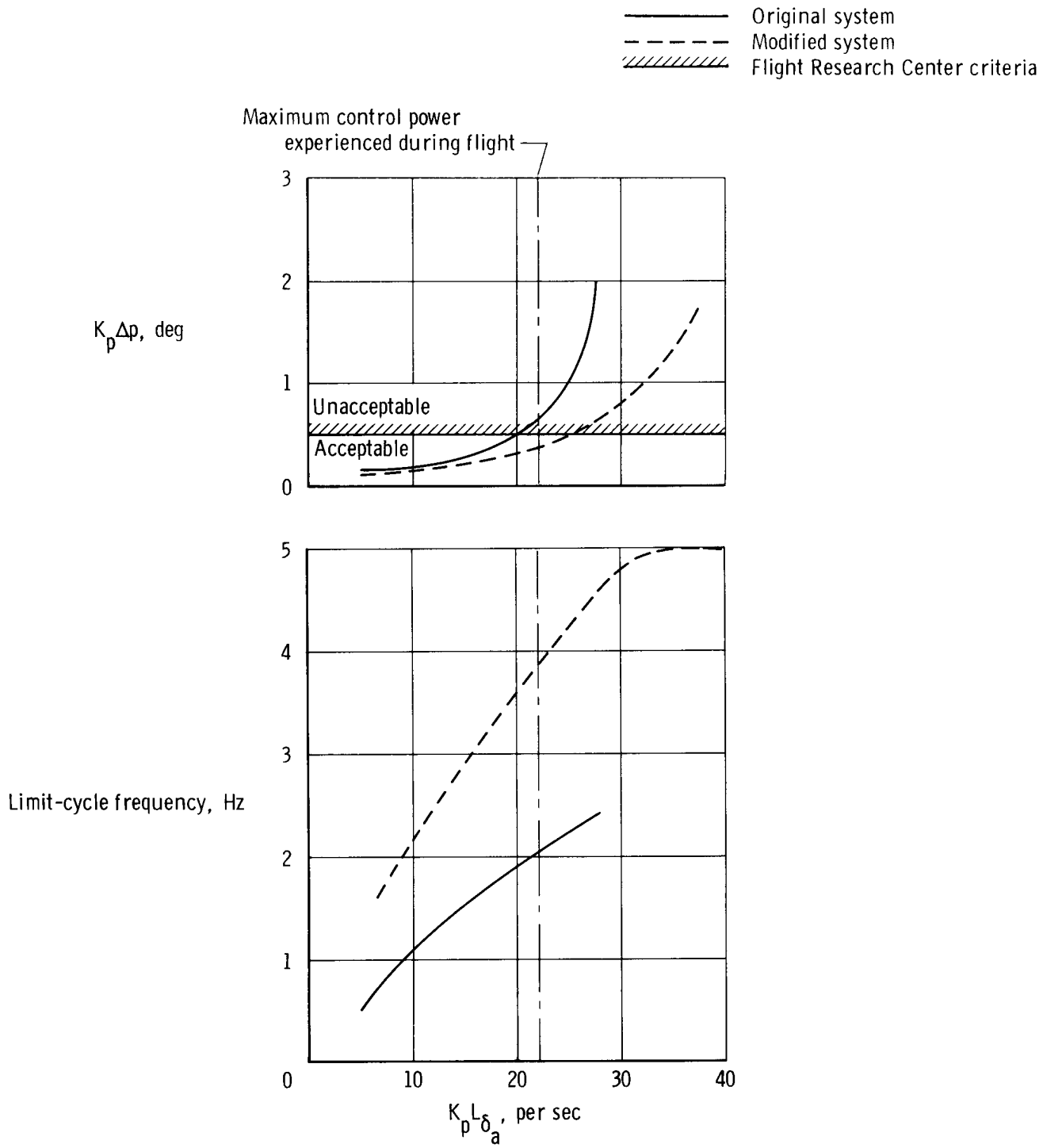

(b) Roll axis.

Figure 12. Continued.

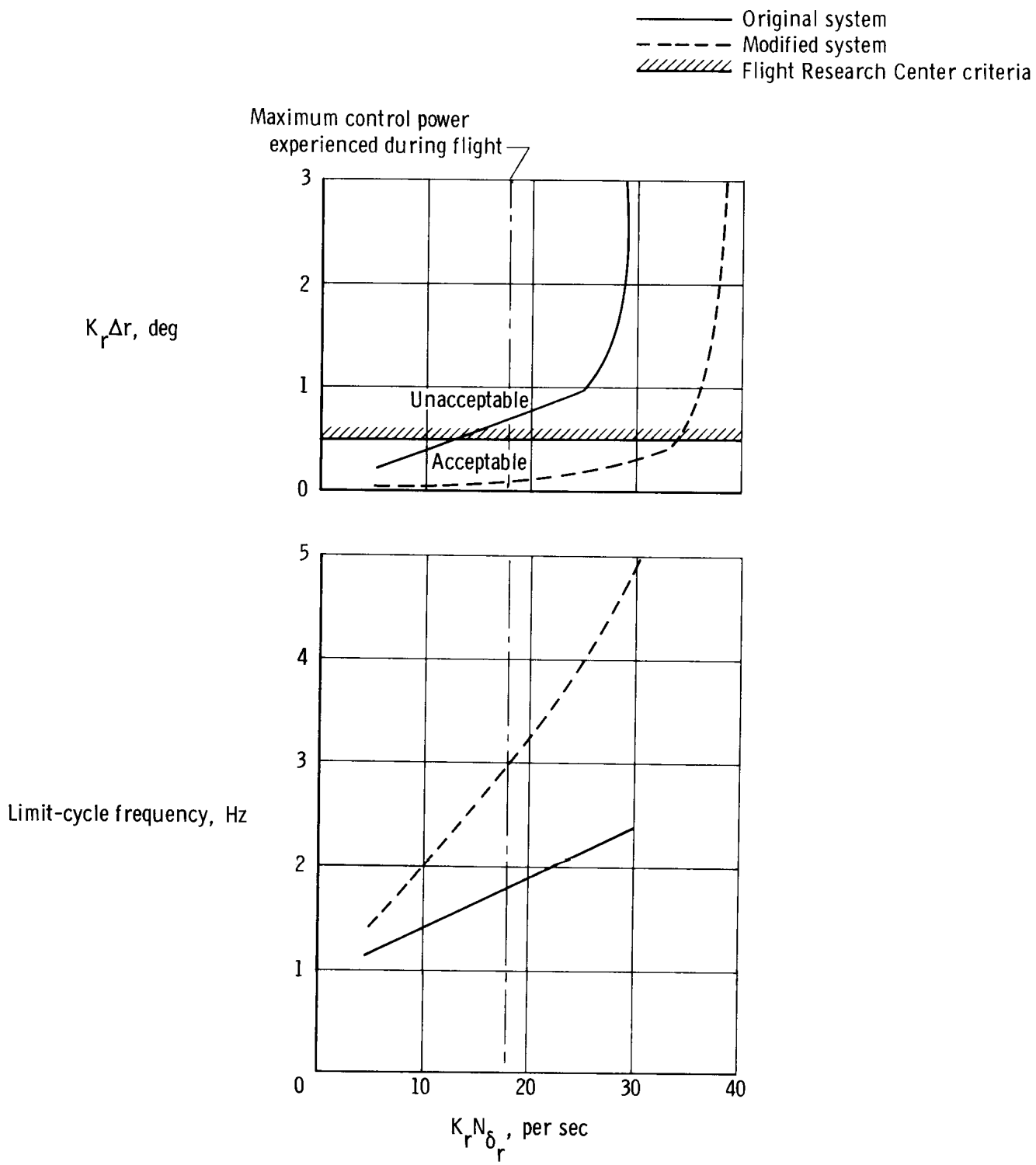

(c) Yaw axis.

Figure 12. Concluded.

NASA-Langley, 1974 —— 2 H-704