NASA Technical Memorandum 81372

A FLIGHT TEST MANEUVER AUTOPILOT FOR A HIGHLY MANEUVERABLE AIRCRAFT

Ralph B. Roncoli

November 1982

NASA

NASA Technical Memorandum 81372

A FLIGHT TEST MANEUVER AUTOPILOT FOR A HIGHLY MANEUVERABLE AIRCRAFT

Ralph B. Roncoli
NASA Ames Research Center
Dryden Flight Research Facility
Edwards, California

National Aeronautics and
Space Administration

1982

INTRODUCTION

The success of a flight test program is often measured by the quality and quantity of the data obtained. High quality data are usually the result of consistently accurate test pilot performance. Consistent performance, however, becomes more difficult to achieve as the difficulty of the flight test maneuvers and the demands on the pilot increase. In response to this problem, a flight test maneuver autopilot (FTMAP) for the highly maneuverable aircraft technology (HiMAT) remotely piloted research vehicle (RPRV) was developed at the NASA Dryden Flight Research Facility. The FTMAP was designed to provide precise, repeatable control of the HiMAT vehicle during certain prescribed maneuvers so that a large quantity of high quality flight data could be obtained in a limited amount of flight time. The HiMAT program is described in detail in reference 1.

The HiMAT RPRV (fig. 1) is a 0.44-scale version of an envisioned full-scale fighter aircraft. The performance goal of the HiMAT is a sustained 8g turn at Mach 0.9 and an altitude of 7620 meters (25,000 feet). The aircraft's design incorporates several technological advances: a close-coupled canard configuration, aeroelastic tailoring, advanced transonic aerodynamics, advanced composite structures, digital fly-by-wire controls, and digitally implemented integrated propulsion control systems. Figure 2 is a three-view drawing of the HiMAT RPRV, showing the vehicle's dimensions and control surfaces.

The RPRV flight test technique uses a ground-based cockpit capable of controlling the test aircraft by means of telemetry-transmitted commands. The basic operational concept for the HiMAT RPRV is illustrated in figure 3. The vehicle is air-launched from a B-52 aircraft at 13,700 meters (45,000 feet) and is controlled through a series of maneuvers by a test pilot located in the ground-based RPRV facility cockpit. Flight test activity is monitored on the ground using downlinked telemetry data. The flight control laws are implemented in both the airborne and ground-based digital computers. The HiMAT RPRV is equipped with landing skids for horizontal recovery on the dry lakebed surface at Edwards Air Force Base.

In the primary mode of operation, illustrated in figure 4, aircraft sensor data are transmitted by means of a telemetry downlink to the ground-based control law computer and are used to drive the displays in the ground-based cockpit. The control law computer executes the primary flight control laws for the aircraft based on the pilot-input commands and the downlinked data. The computer then formulates an actuator command for each of the vehicle's control surfaces. The commands are output to the uplink encoder and then transmitted to the aircraft. The HiMAT flight control systems are discussed in detail in reference 2.

The FTMAP operates as an outer loop controller and augments the primary control system (fig. 5). The inputs to the FTMAP consist of the same downlinked data available to the primary control system. During FTMAP operation, normal pilot inputs to the aircraft are replaced by corresponding commands from the FTMAP computer.

The FTMAP is presently capable of executing two basic maneuvers: pushover pullups and windup turns. The pushover pullups can be executed holding throttle or Mach number fixed. The windup turns can be commanded either by angle of attack or normal acceleration. Each maneuver consists of a straight-and-level phase, a maneuver phase, and a disengagement phase. The straight-and-level phase can be selected independently of the other two phases. Mach number control is available in either the straight-and-level or maneuver phase. The normal disengagement phase, which leaves the FTMAP in control, provides a smooth transition back to straight and level at the FTMAP engagement altitude.

The objectives of a flight test program are to obtain and evaluate flight data. To obtain high quality data the FTMAP was designed to perform within extremely demanding tolerances: ±0.5° angle of attack or ±0.5g normal acceleration, ±0.01 Mach, and ±500 feet in altitude. Though the FTMAP was designed for a particular RPRV, this type of flight test technique shows great promise for the future testing of both piloted and remotely piloted high performance aircraft.

SYMBOLS

ab	afterburner
a_n	normal acceleration (load factor), g
$a_{n_{cmd}}$	commanded normal acceleration (load factor), g
G-ERR	g error (selects special flight director display)
h	altitude, m (ft)
h_{ref}	reference altitude, m (ft)
$\dot{h}$	altitude rate, m/sec (ft/sec)
ILS-GLSP	instrument landing system-glideslope
K_{ab}	throttle afterburner gain
K_d	longitudinal direct path gain for angle of attack and load factor control modes
$K_{d\dot{h}}$	lateral direct path gain for altitude rate
K_h	longitudinal altitude error gain
$K_{\dot{h}}$	longitudinal altitude rate gain
K_I	longitudinal integral path gain for alpha and load factor control modes
K_{Ih}	lateral integral path gain for altitude error
$K_{I\dot{h}}$	lateral integral path gain for altitude rate
K_M	lateral gain factor
K_p	lateral roll rate error gain

$K_{\bar{q}}$	pitch axis dynamic pressure gain
K_{q_c}	throttle impact pressure error gain
$K_{\dot{q}_c}$	throttle impact pressure rate gain
K_{φ}	lateral bank angle error gain
M	Mach number
M_{cmd}	commanded Mach number
$n_{z_{cmd}}$	commanded normal acceleration (load factor) for primary control system, g
p	roll rate, deg/sec
p_{cmd}	commanded roll rate
p_s	static pressure, N/m^2 (lb/ft^2)
PLA_{cmd}	power lever angle command, deg
$\bar{q}$	dynamic pressure, N/m^2 (lb/ft^2)
q_c	impact pressure, N/m^2 (lb/ft^2)
$q_{c_{cmd}}$	commanded impact pressure, N/m^2 (lb/ft^2)
$\dot{q}_c$	impact pressure rate, $N/m^2/sec$ ($lb/ft^2/sec$)
SWR2, SWR3, SWR4, SWR5	lateral control mode switches
s	Laplace transform
α	angle of attack, deg
α_{cmd}	commanded angle of attack, deg
Δh	altitude error from commanded altitude, m (ft)
ΔM	Mach error from commanded Mach number
$\Delta\alpha_{cmd}$	commanded change in angle of attack from trim condition, deg

δa_p	lateral stick position, cm (in.)
δe_p	longitudinal stick position, cm (in.)
φ	bank angle, deg
φ_{cmd}	commanded bank angle, deg

FTMAP HARDWARE

The hardware used to initiate and monitor FTMAP operation is located in the ground-based RPRV facility cockpit (fig. 6). FTMAP commands are input to the FTMAP computer using a cockpit input panel (fig. 7) located on the left cockpit console. The input panel is equipped with two magnetic control switches, four sets of thumbwheel switches, four corresponding sets of light-emitting diode (LED) annunciators, and a send button.

The two magnetic control switches, located in front of the thumbwheel switches, are used to engage the straight-and-level and maneuver phases of FTMAP operation. Since the control switches are magnetic, they can only be engaged and remain engaged if the appropriate signals are sent from the FTMAP computer. The FTMAP computer continously monitors the disengage discrete and the backup control system discrete. If either of these are true, the computer does not permit FTMAP engagement. An electromagnet is used to hold the two control switches in the engaged position. As a safety precaution, the maneuver switch cannot be engaged if the level cruise switch is not engaged. The maneuver switch is also equipped with a channel guard to prevent accidental engagement.

The thumbwheel switches are used to select the desired maneuver, target condition, and Mach number. The first set of thumbwheel switches defines the maneuver to be performed. The maneuver numbers are defined as follows:

Maneuver number	Description of maneuver
1	g-commanded windup turn to the right
2	g-commanded windup turn to the left
3	α-commanded windup turn to the right
4	α-commanded windup turn to the left
5	Pushover pullup holding throttle fixed
6	Pushover pullup holding Mach constant

The FTMAP computer will not accept any other maneuver number. The second set of thumbwheel switches sets the target angle of attack, α, for either a right or left α-commanded windup turn, or the $\Delta\alpha_{cmd}$ for either type of pushover pullup. The third set of thumbwheel switches sets the target normal acceleration or load factor for either a right or left g-command windup turn. The fourth set of thumbwheel switches is used to input the Mach number to be reached and maintained during a maneuver.

The LED annunciators display the current thumbwheel switch values registered in the FTMAP computer. The annunciators only display the information pertinent to the selected maneuver. For example, a nonzero target α command would register as zero on the LED annunciators if a normal acceleration windup turn had been selected. To initiate a new command, the appropriate thumbwheel switches are changed, and the send button, located directly behind the thumbwheel switches, is depressed.

To monitor FTMAP operation, the cockpit is equipped with three status lights located on the instrument panel directly below the attitude/direction and yaw rate indicators (fig. 8). These lights are horizontally placed LEDs that indicate the present phase of FTMAP operation. The LEDs are labeled (from left to right) level cruise, maneuver, and exit. The level cruise and maneuver LEDs are green; the exit LED is yellow.

FTMAP OPERATION

The operation of the FTMAP is completely controlled through the cockpit input panel illustrated in figure 7. To initiate FTMAP operation and command straight-and-level or level cruise flight, the left magnetic control switch is pushed forward to the level cruise position. The altitude at which the level cruise switch is engaged is the engagement altitude or reference altitude. Regardless of aircraft attitude, when the level cruise switch is engaged, the FTMAP levels the aircraft's wings, maintains the reference altitude, modulates the throttle to reach and maintain the Mach number selected on the fourth set of thumbwheel switches, and activates the level cruise indicator on the instrument panel. The FTMAP holds the reference altitude and selected Mach number until a new command is input. Level accelerations and decelerations are commanded by selecting a new Mach number and depressing the send button.

To engage a particular maneuver, the correct coding and desired target conditions must be dialed on the appropriate thumbwheel switches, the level cruise switch must be engaged, and the second magnetic maneuver control switch must be pushed forward to the maneuver position. The FTMAP maintains straight-and-level flight for 5 seconds after the engagement of the magnetic maneuver switch. The level cruise indicator remains on during this 5-second delay. After the 5-second delay, the FTMAP begins the maneuver phase. At this point, the maneuver indicator is illuminated, and the level cruise indicator turns off.

The pushover pullup maneuver is executed by pushing the aircraft's nose down an incremental angle of attack from straight-and-level flight, pulling the nose up to the same incremental angle of attack above straight and level, and finally ramping the nose back to the original straight-and-level angle of attack. Maneuvers 5 and 6 allow two forms of the basic pushover pullup: Maneuver 5 executes a pushover pullup holding the throttle position fixed, resulting in a varying Mach number; maneuver 6 holds Mach number constant, allowing the throttle to vary. During a pushover pullup, the ramping rate is held constant at 0.5 degree per second.

The windup turn is a constant altitude, constant Mach turn with increasing normal acceleration or angle of attack. During a windup turn, both the target parameter and Mach number can be changed. Thus, the FTMAP is capable of executing windup, sustained g, or winddown turns at constant or varying Mach numbers. The rate at which the aircraft ramps up to its target condition depends on what type of windup turn was selected. In an α-commanded windup turn, the FTMAP ramps up to the target α at 0.25 degree per second. In a g-commanded windup turn, the ramping rate up to the target g is 0.2g per second. These input rates were preset according to mission requirements and are easily changed.

Throughout FTMAP operation, pilot inputs to the stick and throttle positions are ignored. Upon disengagement of the FTMAP, control is returned to the pilot, and throttle and stick commands are immediately sent through the primary control system corresponding to the aircraft's present throttle and stick positions.

The FTMAP is equipped with six procedures for exiting a maneuver. In three of these procedures, the FTMAP remains operative, performing a controlled exit; in the other three, it is completely disengaged. In its normal working operation, the FTMAP performs a controlled exit from the maneuver phase, executing a smooth, gentle ramping out of bank angle and load factor, returning the aircraft to straight-and-level flight.

The primary method of exiting a maneuver is to pull the maneuver switch to the off position. This immediately commands the exit phase, which begins to ramp the aircraft back to straight-and-level flight. The rate at which the aircraft ramps back to straight and level is dependent on the maneuver selected. In an α-commanded windup turn, the aircraft ramps back to straight and level at 0.5 degree per second. In a g-commanded windup turn, the ramping rate is 0.4g per second. The ramping rate during the exit phase of a pushover pullup is 0.5 degree per second, which is equivalent to the rate throughout the maneuver phase.

The exit phase, like the straight-and-level and maneuver phases, is indicated on the instrument panel. Immediately after an exit has been commanded, the exit indicator is illuminated and the maneuver indicator turns off. The exit phase does not ramp the aircraft completely back to straight and level. At a certain point, based on the bank angle of the aircraft, the FTMAP switches from the exit phase back to the straight-and-level phase, and the LEDs on the instrument panel change accordingly. The FTMAP then attempts to regain the engagement altitude and the thumbwheel-selected Mach number.

The normal maneuver exit phase can also be triggered by reaching one of the preset limits incorporated into the control system. These preset limits are based on the actual α and g limits of the aircraft minus a tolerance value. The tolerance value provides a safety margin to prevent possible damage to the aircraft. This method insures that an exit is commanded if an α or g limit is reached, regardless of the maneuver selected. In a windup turn, the type of maneuver selected determines the ramping rate back to straight and level. For example, if the aircraft were in a g-commanded windup turn and reached an α limit, it would ramp back to straight and level at a rate corresponding to a g-commanded windup turn.

Another method of commanding a normal exit from a windup turn maneuver is based on a maneuver timer. When the FTMAP reaches its target condition, the maneuver timer begins. The FTMAP attempts to hold the target condition for a prescribed amount of time. This method is not being used currently due to mission requirements, but is an available alternative. In both of the latter two methods described, the magnetic maneuver switch falls back to the off position when an exit is commanded by the FTMAP.

The three remaining procedures disengage the autopilot completely and leave the pilot in control. The primary method of disengaging the autopilot is to depress the trigger switch on the control stick. Squeezing the trigger returns one or both of the FTMAP control switches to their original positions, depending on the current phase of FTMAP operation. The sound associated with the disengagement of the control switches provides the pilot with a positive aural indication that he has control of the aircraft.

An equally effective procedure used to disengage the FTMAP is executed by pulling the magnetic level cruise switch back to the disengage position. If the aircraft is in a maneuver, this action also causes the magnetic maneuver switch to move to the off position.

The third method of disengagement involves the G-ERR/ILS-GLSP switch behind the thumbwheel switches. The G-ERR position provides the pilot with a special flight director display, while the ILS-GLSP position provides the pilot with instrument landing-glideslope guidance. When this switch is pushed forward to the ILS-GLSP position, the FTMAP disengages. Though not intended to be the primary method of disengagement, this feature prevents the possibility of entering a maneuver while attempting to land.

FTMAP CONTROL SYSTEM

The FTMAP control system, as illustrated in figure 5, operates as an outer loop controller to the HiMAT primary control system (PCS). The FTMAP control laws are composed of longitudinal control modes (fig. 9), lateral control modes (fig. 10), and a throttle control mode (fig. 11). Through various combinations of these control modes, the FTMAP maneuvers are executed. The inputs to these control modes are downlinked aircraft sensor data. The outputs of these control modes are the actuator commands that are uplinked to the aircraft.

Altitude Hold Mode

The altitude hold mode (fig. 9(a)) maintains altitude during straight-and-level flight. In this mode, the longitudinal axis of the aircraft is controlled by an altitude rate feedback signal and an altitude error signal. The altitude error signal is the difference between the FTMAP engagement altitude and the actual aircraft altitude. Dynamic pressure is passed through a gain schedule (fig. 12), providing a scaling factor to compensate for aerodynamic gain. After the dynamic pressure multiplier, the signal is passed through an inverse stick shaper.

The inverse stick shaper (fig. 13) is incorporated into all the longitudinal FTMAP control modes to compensate for a stick shaper in the PCS. The stick shaper in the PCS is a nonlinear stick displacement-versus-control surface response curve. The stick shaper was incorporated into the PCS for piloting considerations. Since the same considerations do not apply to FTMAP operation, the inverse of the stick shaper in the PCS was added in the appropriate FTMAP modes. The result is a linear stick displacement-versus-control surface response command.

The final block in the altitude hold mode is an output limiter. This block limits the longitudinal authority of the FTMAP to the normal displacement of the stick in the RPRV facility cockpit.

Angle of Attack

The angle of attack control mode (fig. 9(b)) provides control of the longitudinal axis in the α-commanded windup turn and pushover pullup maneuvers. This mode is based on an angle of attack error signal, which is the difference between the commanded FTMAP angle of attack and the sensor-measured angle of attack of the aircraft.

The angle of attack error signal follows two paths: a direct gain path and an integral gain path. The direct gain path provides an immediate output command but goes to zero as the target condition is reached. The output command resulting from the integral gain path lags the error signal but has the capability of maintaining a target condition even after the error signal has gone to zero. Saturation of the integrator is prevented by limiting the integrator. The direct path and integral path signals are combined, and the resultant command is passed through a dynamic pressure gain schedule, an inverse stick shaper, and an output limiter. These latter three blocks are identical to the last three blocks described in the altitude hold mode.

Load Factor Control Mode

The load factor control mode (fig. 9(c)) is used exclusively in the g-commanded windup turn. It is identical in every respect to the angle of attack control mode previously described, except for its inputs. The main inputs in this mode form a normal acceleration error signal, which is the difference between the commanded FTMAP load factor and the sensor-measured aircraft load factor.

Wings-Level Mode

The wings-level mode (fig. 10(a)), which is a subset of the total lateral control mode of the FTMAP, provides control of the lateral axis of the aircraft in both straight-and-level flight and the pushover pullup maneuver. The aircraft's attitude is controlled by roll rate and bank angle feedback signals, which are scaled and then combined. The resultant signal is passed through a limiter-limited integrator combination. The first limiter prevents a large roll rate or bank angle signal from reaching the integrator. A signal that might exercise this limiter could occur at FTMAP initiation. The second limiter prevents saturation of the integrator. Dynamic pressure is input through a gain schedule dependent on Mach number (fig. 14). This schedule provides a scaling factor prior to the final output limiter. The output limiter is similar to the output limiter in the longitudinal control modes. The lateral authority of the FTMAP is limited to the normal displacement of the stick in the RPRV facility cockpit.

Turn Mode

The turn mode lateral control (fig. 10(b)) is also formed from a subset of the total lateral control mode. This mode provides lateral axis control during any of the windup turn maneuvers. A roll rate error signal, an altitude error signal, and an altitude rate feedback signal are the primary inputs. Altitude hold is achieved by means of the altitude rate and altitude error signals. The aircraft's bank angle is maintained by the roll rate and the altitude error signals.

The roll rate error signal is formed from the difference between the aircraft's roll rate and the commanded roll rate. The FTMAP commands a roll rate of 10 degrees per second until the aircraft's bank angle is within 10° of the commanded bank angle. A bank angle error signal is included in the lateral control mode to assist the entrance into a turn, but it is switched out of the turn mode when a bank angle of 35° is achieved. The final adjustments in bank angle are controlled by the altitude error signal. The roll rate error signal is scaled before reaching a washout filter. The washout filter attempts to maintain a constant value, allowing the turn to be established for a nonzero roll rate.

To prevent excessive altitude error effects, the altitude signal is passed through a limiter and a scaling factor before being combined with the altitude rate signal. The altitude rate signal also follows a direct gain path and is input downstream of the limted integrator. The limiter-limited integrator combination is identical to the one described in the wings-level mode. Dynamic pressure again provides a scaling factor before the final limiting process.

Lateral control mode. - All FTMAP lateral axis control is derived from the lateral control mode (fig. 10(c)). The placement of four switches determines the control mode output. In the figure, the switches are labeled SWR2, SWR3, SWR4, and SWR5. The lateral control mode can be transformed into the wings-level mode or the turn mode lateral control for a right or left windup turn, depending on the switch placement. Table 1 lists the logical equivalent values of the switches during particular maneuvers.

Throttle control mode. - The throttle control mode (fig. 11) is used in all FTMAP maneuvers except the pushover pullup with fixed throttle. The throttle command is derived from the combination of an impact pressure error signal and an impact pressure rate feedback signal.

The impact pressure error signal is the result of the combination of a static pressure input, a commanded Mach input, and an impact pressure input. The commanded Mach number is passed through a pressure ratio command schedule (fig. 15), then multiplied by the free-stream static pressure. This essentially forms a commanded impact pressure signal. The impact pressure error signal is derived from the difference between the commanded impact pressure and the aircraft impact pressure. A gain schedule dependent on altitude (fig. 16) provides a scaling factor for the impact pressure rate signal. The scaled impact pressure rate signal produces faster throttle response at high altitudes to compensate for changes in the engine dynamics due to altitude.

The FTMAP can command afterburner during the straight-and-level and maneuver phases, provided certain conditions are satisfied. During either phase, the equivalent FTMAP throttle position must be greater than or equal to 98° to set an afterburner discrete true. In the straight-and-level phase, a target Mach number greater than or equal to 1.0 must be commanded.

Table 2 illustrates the control modes used during the various FTMAP maneuvers.

SIMULATION RESULTS

Simulated FTMAP operation has proved the usefulness of this system. Design requirements have been maintained at nearly every flight condition. The simulation results also show favorable FTMAP performance under extremely turbulent flight conditions. Large perturbations are counterbalanced by FTMAP commands returning the aircraft to a steady-state flight condition.

The simulated FTMAP commands for an 8g windup turn at Mach 0.82 and an altitude of 6550 meters (21,500 feet) are illustrated in figure 17. The time histories begin at the moment the magnetic maneuver switch was engaged. During the 5-second delay before maneuver initiation, the FTMAP commands straight and level at constant Mach. The maneuver initiation point corresponds directly to the noticeable movement in the lateral stick time history. The disturbance is the result of the initial commanded bank angle. In the longitudinal axis, the FTMAP begins to command aft stick to increase the normal acceler-

ation of the aircraft. The throttle command slowly rises to military power, remains constant for a short period of time, and then moves into the afterburner range for the remainder of the maneuver. As the exit phase is commanded, the equivalent longitudinal stick position is moved forward, unloading the aircraft. A lateral stick input is also commanded to roll the aircraft out of its present bank angle. The same straight-and-level command given at the initiation of FTMAP operation is used to level the aircraft.

A comparison of the performance of an 8g windup turn at Mach 0.82 and an altitude of 6550 meters (21,500 feet) between a test pilot and the FTMAP is illustrated in figure 18. The FTMAP performance is the result of the commands illustrated in figure 17. The time histories in figure 18 confirm that the FTMAP was able to operate within the design tolerances. A slight improvement over the test pilot's performance is revealed in the altitude error and altitude rate time histories. The FTMAP suffered an initial loss of altitude that had been nearly recovered when the exit phase was commanded. The altitude rate time history shows excellent FTMAP performance until the commanded exit. In neither parameter does the pilot's performance indicate such a steady convergence toward the target condition. The FTMAP was also able to achieve the desired ramping rate, dictated by mission requirements, up to the target condition. The pilot, however, ramped up to the target condition at a slightly different, variable rate. The remaining time histories reveal little difference between the performance of the test pilot and the FTMAP. The comparison, however, shows the FTMAP is capable of executing a much smoother, noise-free maneuver than can the test pilot.

FLIGHT RESULTS

The straight-and-level phase of the FTMAP has been flight tested to a limited extent. Level cruise flight and level accelerations have been executed successfully and within the design criteria. The preliminary flight results reveal an extremely close correlation with the simulation results.

CONCLUDING REMARKS

The FTMAP was developed as a supplement to the HiMAT RPRV flight program. Since none of the HiMAT test flights are dedicated to the FTMAP, qualification of the FTMAP systems is proceeding slowly. The operational procedures and safety features of the FTMAP have all met with positive response. The FTMAP simulation has continuously exhibited performance levels equal or superior to those of the test pilot. With its improved repeatability, the FTMAP can obtain flight data virtually unobtainable through normal piloted techniques. Flight testing of the maneuver and exit phases is planned for the near future.

The FTMAP is continuing to evolve at the NASA Dryden Flight Research Facility. Work is proceeding to correct the initial altitude loss associated with the maneuver engagement. The emphasis during the remaining portion of the HiMAT program will be to increase the FTMAP's accuracy and maneuver capability. The potential uses of the FTMAP extend well beyond the range of RPRVs since accurate flight test maneuver control is desirable in the flight testing of any vehicle.

National Aeronautics and Space Administration
Ames Research Center
Dryden Flight Research Facility
Edwards, California, April 27, 1982

REFERENCES

1. Arnaiz, Henry H.; and Loschke, Paul C.: Current Overview of the Joint NASA/USAF HiMAT Program. Tactical Aircraft Research and Technology, NASA CP-2162, Part 1, 1980, pp. 91-121.

2. Petersen, Kevin L.: Flight Control Systems Development of Highly Maneuverable Aircraft Technology (HiMAT) Vehicle. AIAA Paper 79-1789, Aug. 1979.

TABLE 1.-LATERAL CONTROL MODE SWITCHING

(Logical value of .True. indicates closed switch)

Maneuver	Logical equivalent of switch status
Straight and level	SWR2 = .True. SWR3 = .True. SWR4 = .False. SWR5 = .False.
Pushover pullup	SWR2 = .True. SWR3 = .True. SWR4 = .False. SWR5 = .False.
Right g-commanded windup turn	*SWR2 = .False. SWR3 = .False. SWR4 = .False. SWR5 = .True.
Left g-commanded windup turn	*SWR2 = .False. SWR3 = .False. SWR4 = .True. SWR5 = .False.
Right α-commanded windup turn	*SWR2 = .False. SWR3 = .False. SWR4 = .False. SWR5 = .True.
Left α-commanded windup turn	*SWR2 = .False. SWR3 = .False. SWR4 = .True. SWR5 = .False.

*SWR2 is .True. until $\varphi > 35°$

TABLE 2.-CONTROL MODES USED DURING MANEUVERS

Maneuver	Control mode
Straight and level	Altitude hold Throttle control Lateral control
Pushover pullup	α control *Throttle control Lateral control
g-commanded windup turn	Load factor control Throttle control Lateral control
α-commanded windup turn	α control Throttle control Lateral control

*Not used in maneuver 5

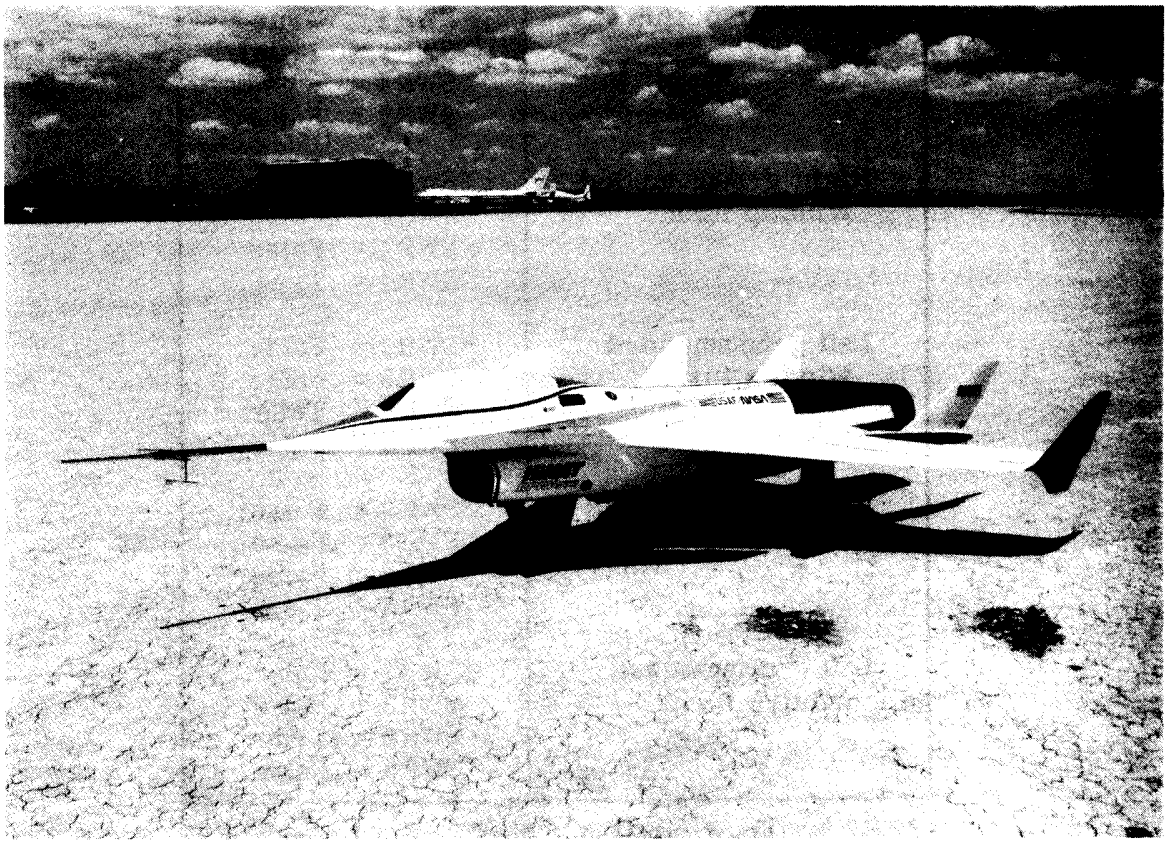

Figure 1. HiMAT RPRV on Edwards dry lakebed.

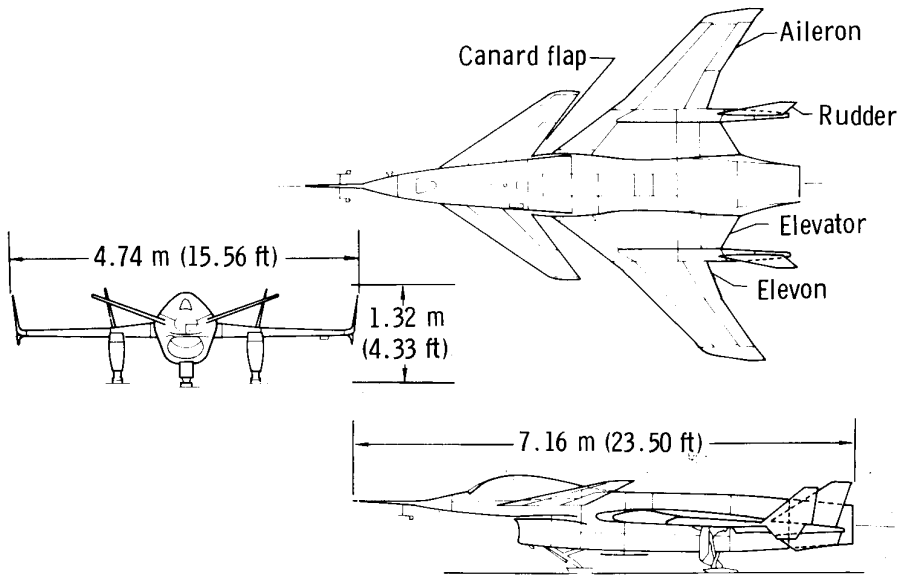

Figure 2. Three-view drawing of HiMAT vehicle.

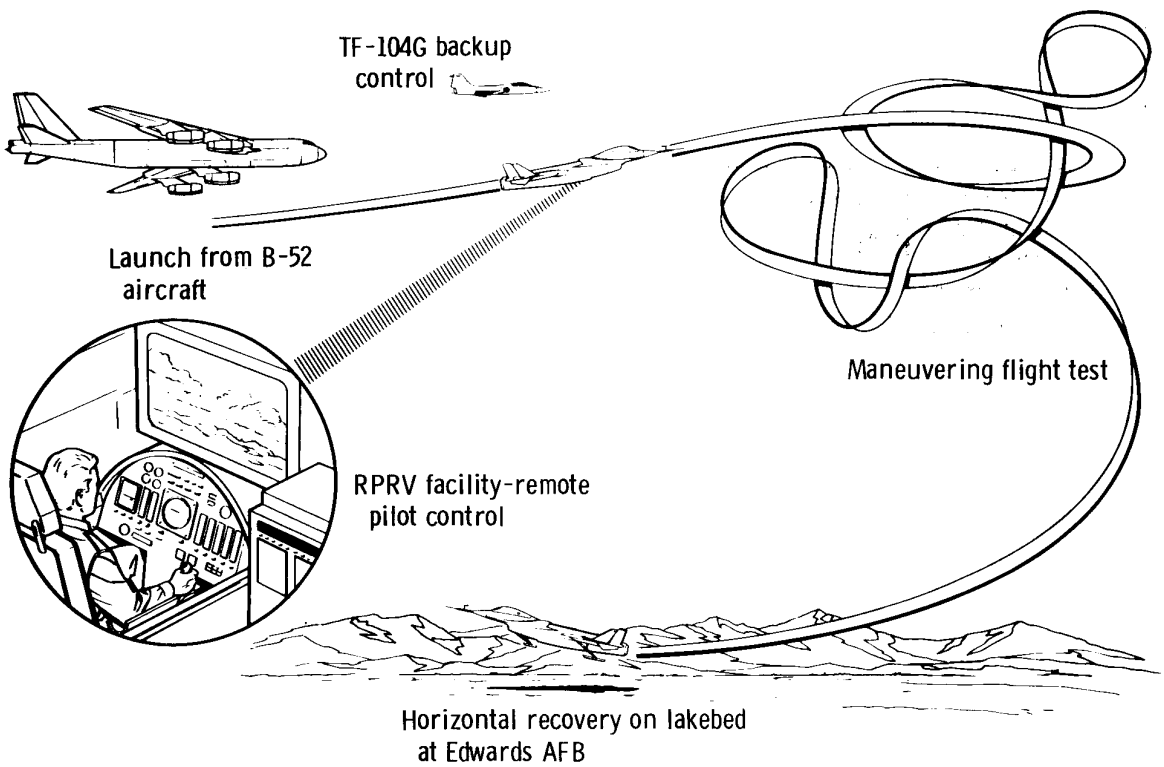

Figure 3. HiMAT operational concept.

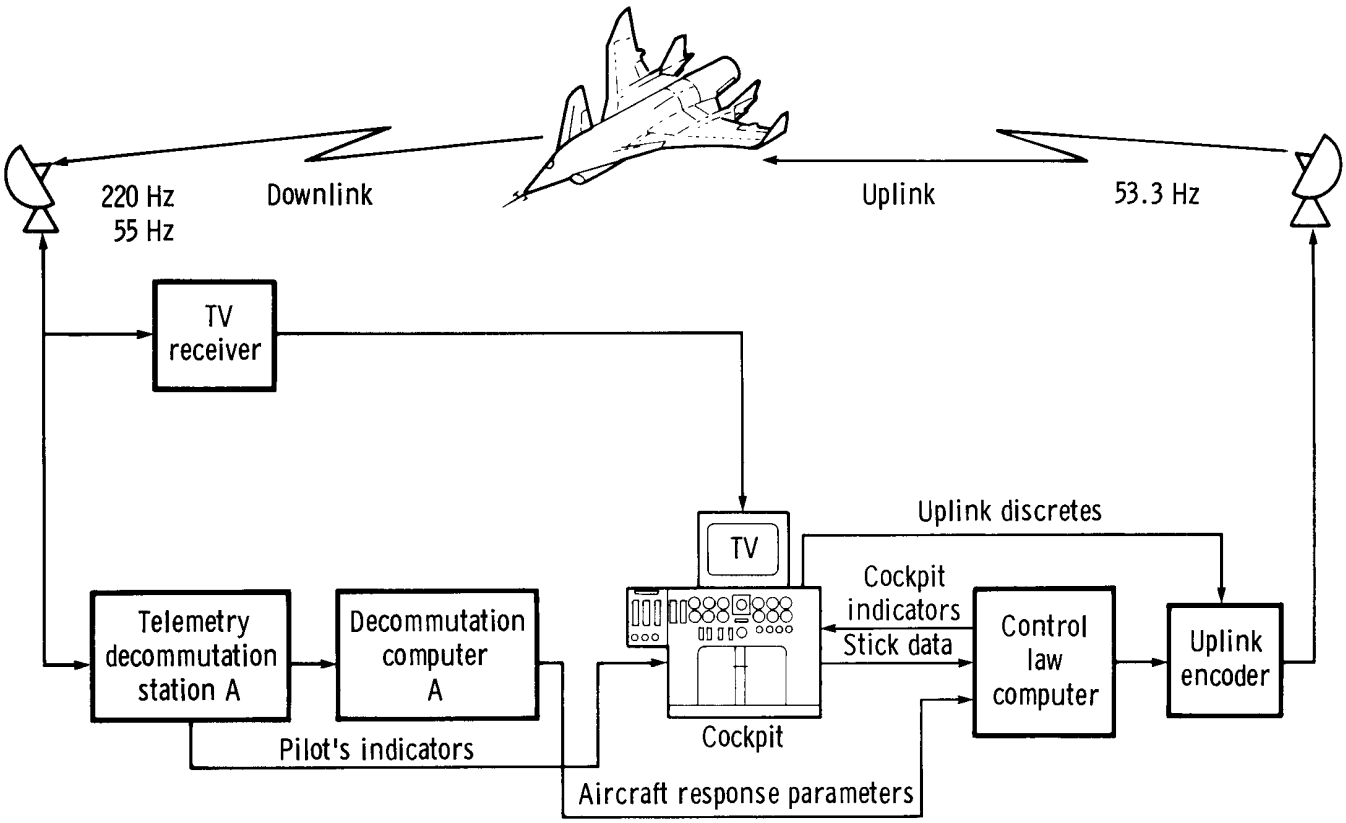

Figure 4. HiMAT RPRV primary control system.

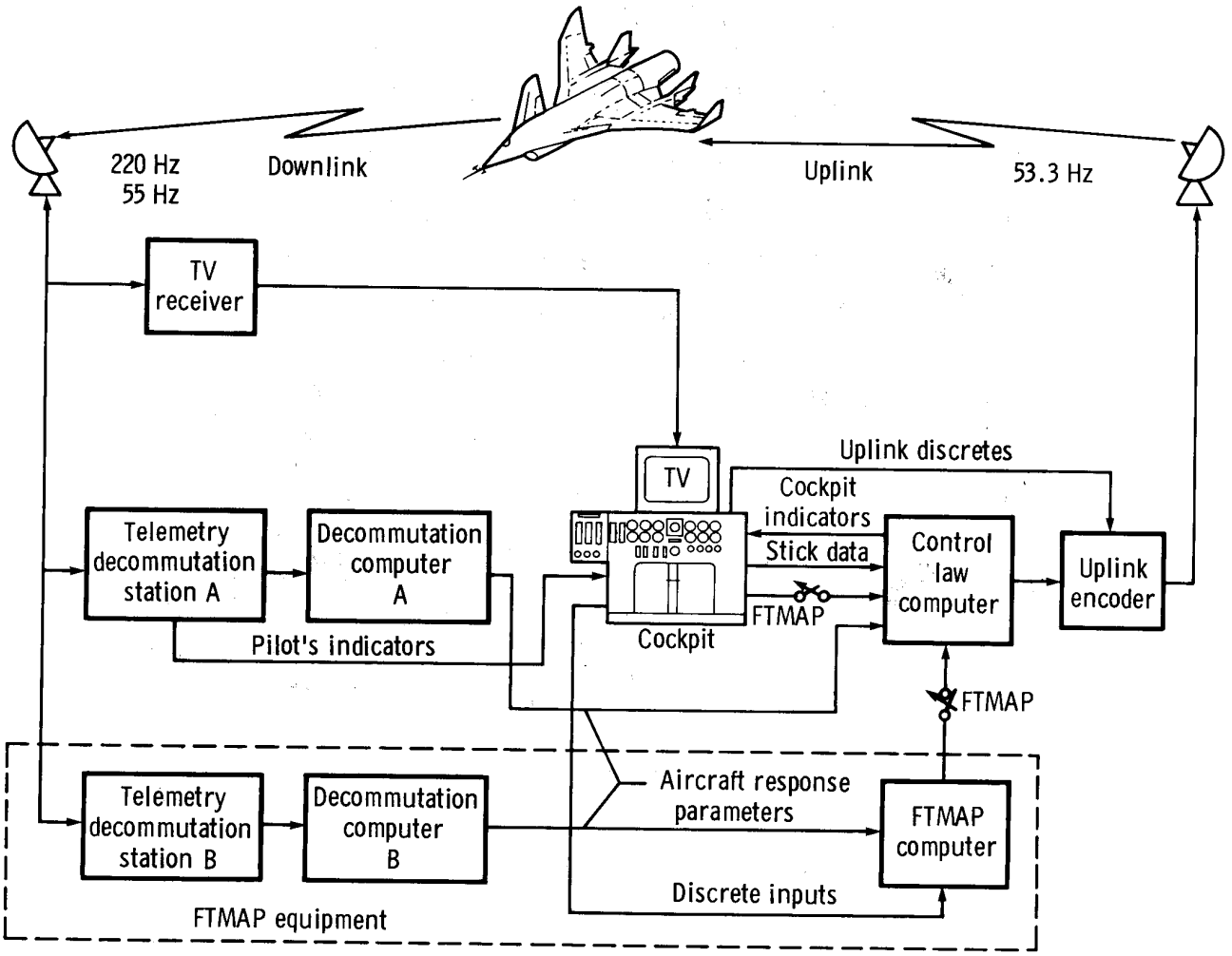

Figure 5. HiMAT flight system with FTMAP.

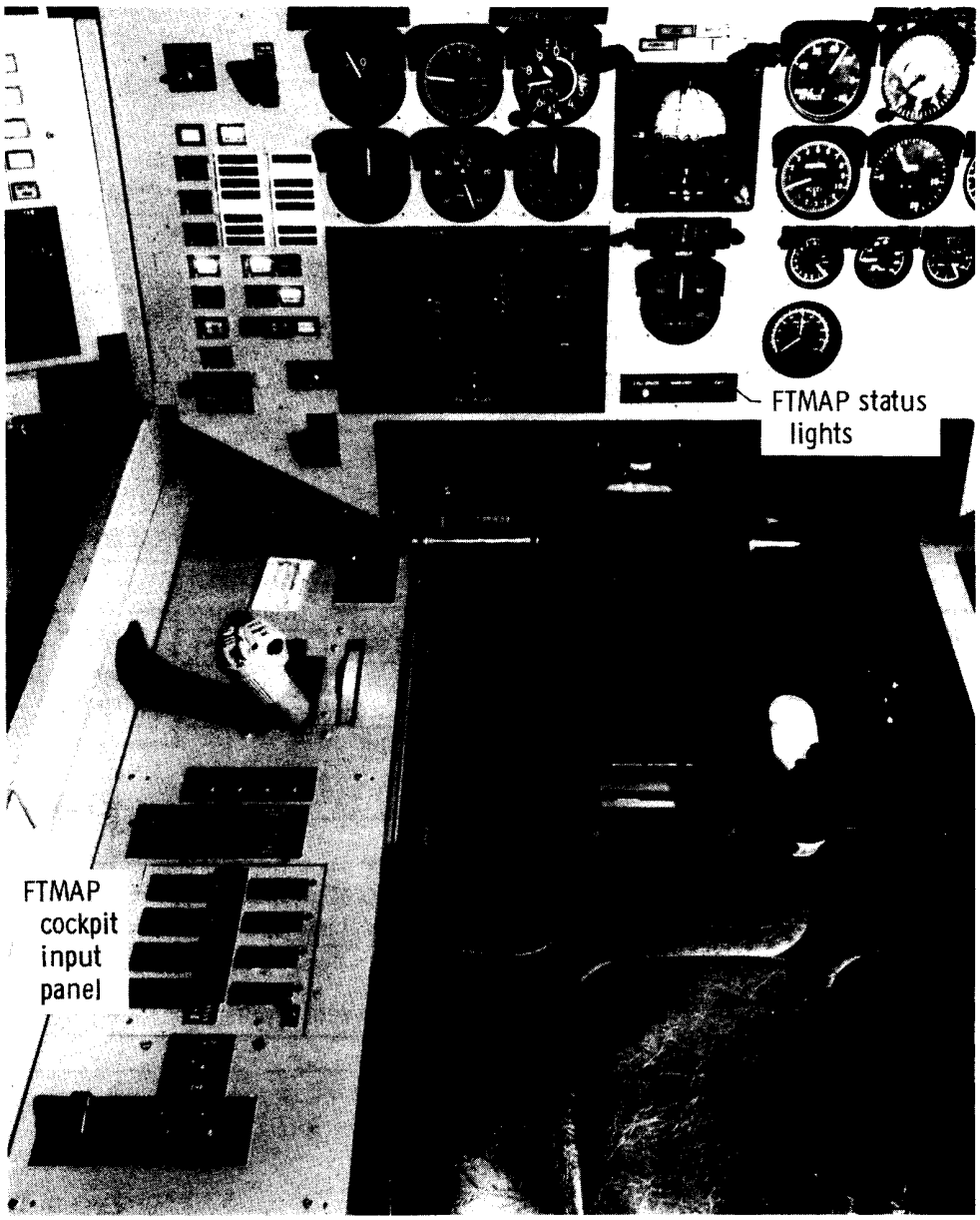

Figure 6. HiMAT cockpit showing FTMAP hardware.

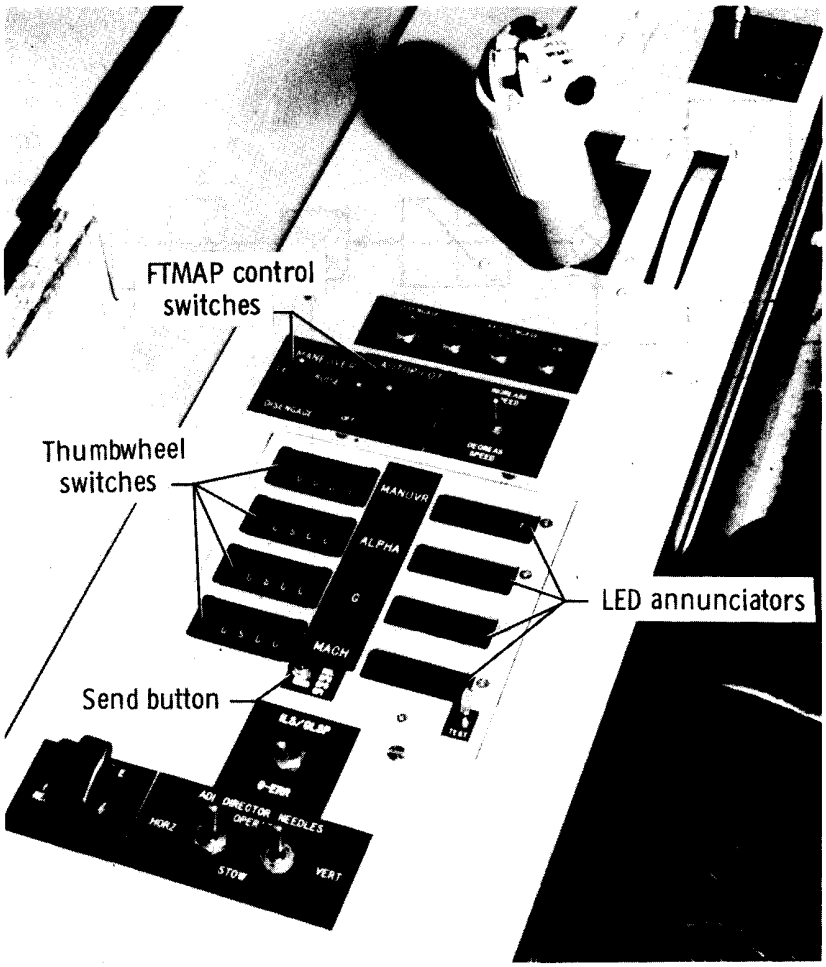

Figure 7. FTMAP cockpit input panel.

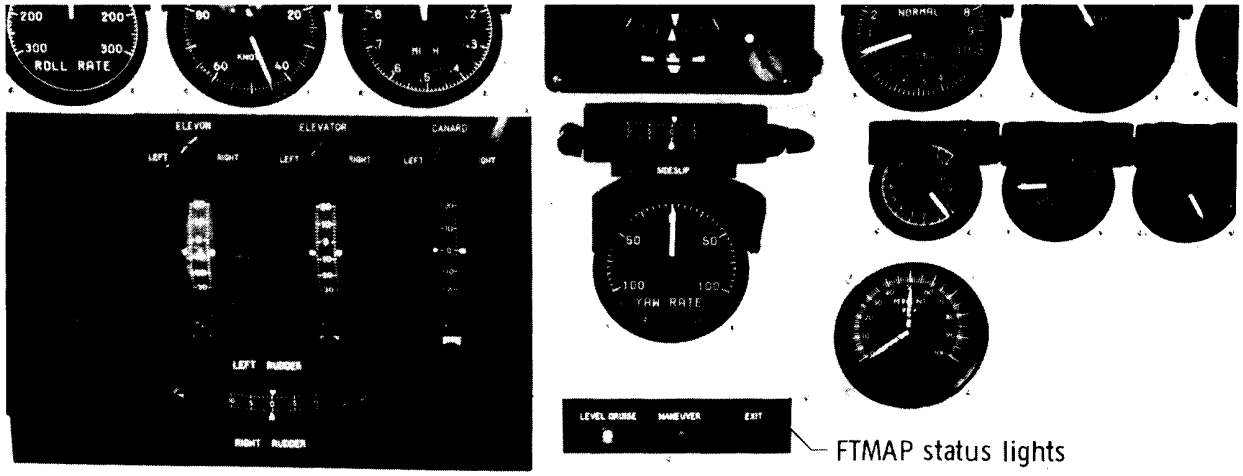

Figure 8. HiMAT instrument panel.

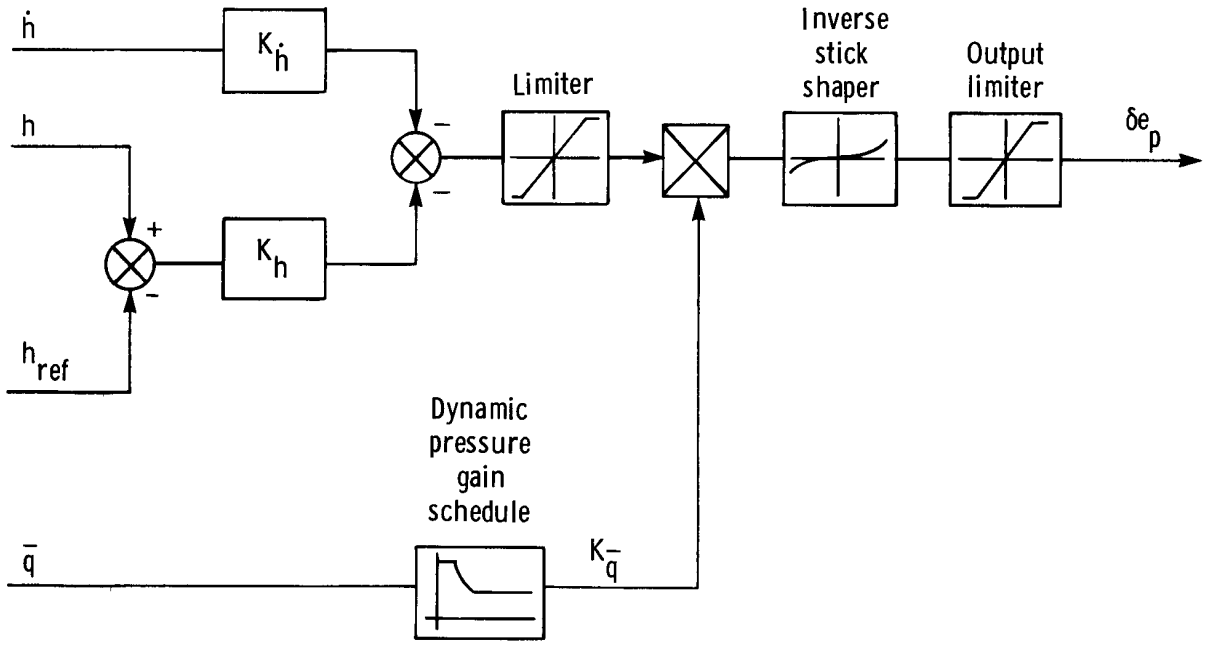

(a) Altitude hold mode.

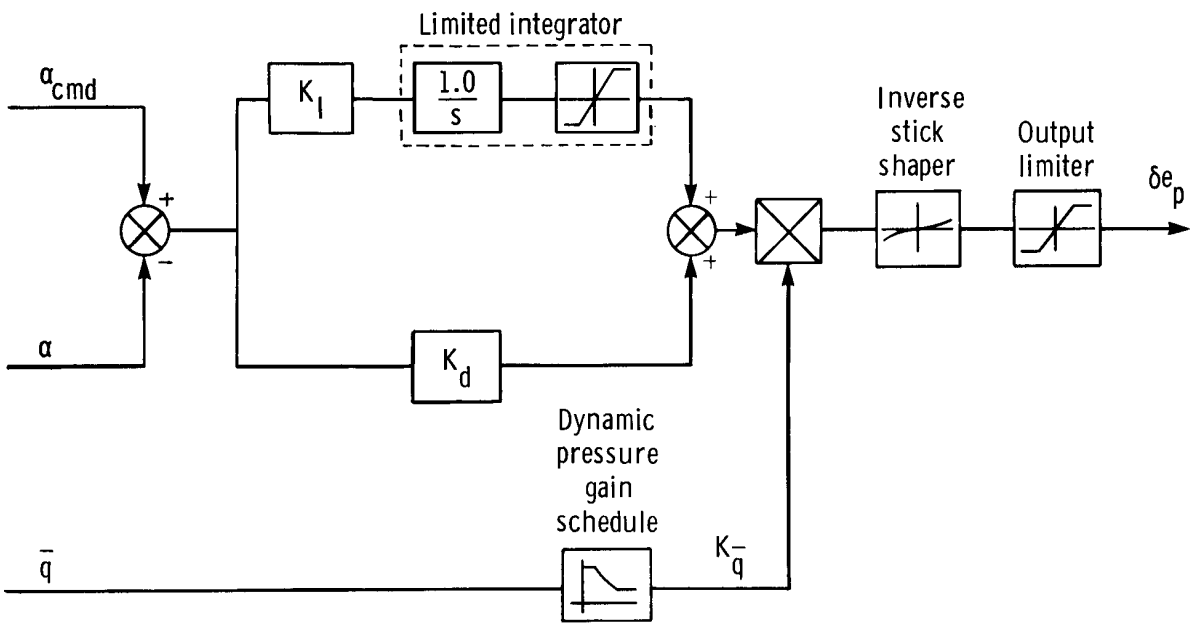

(b) Angle of attack control mode.

Figure 9. Longitudinal control modes.

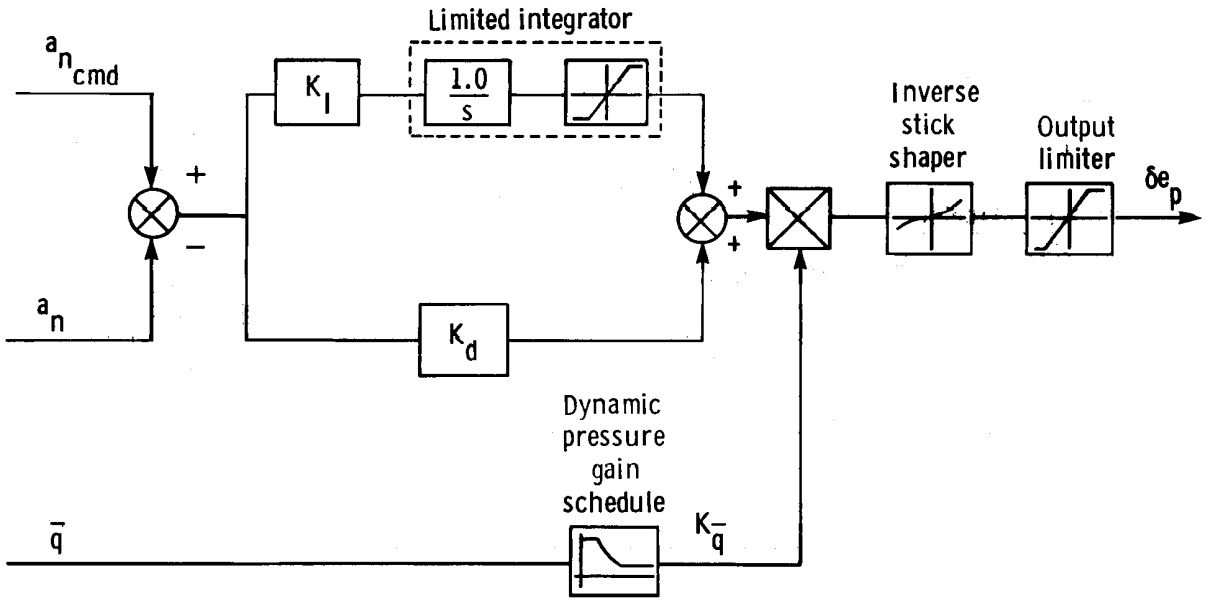

(c) Load factor control mode.

Figure 9. Concluded.

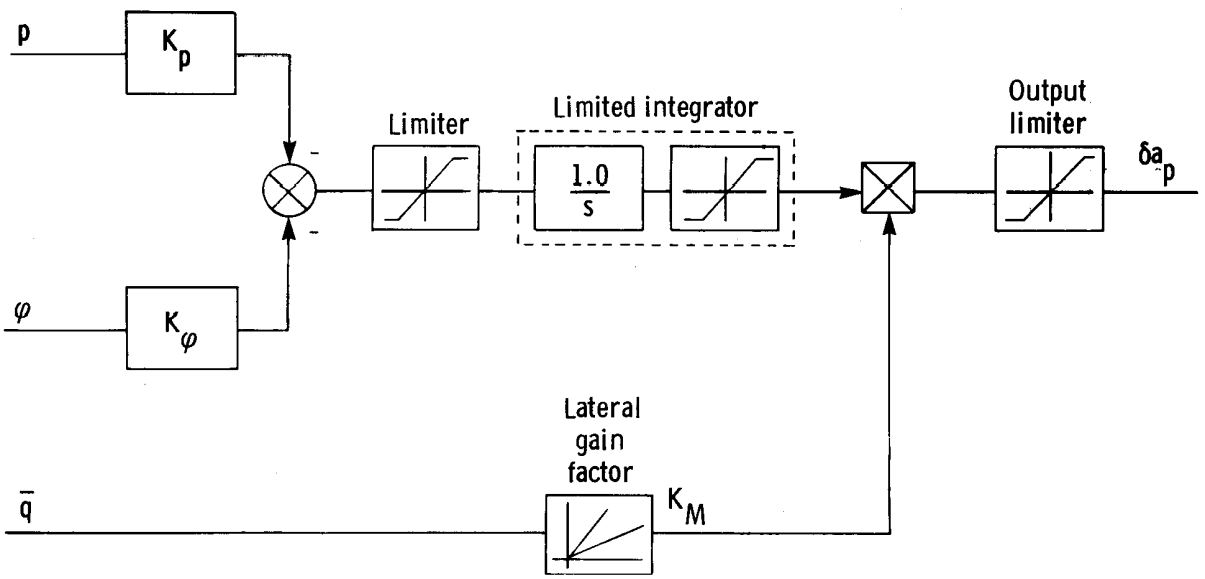

(a) Wings-level mode.

Figure 10. Lateral control modes.

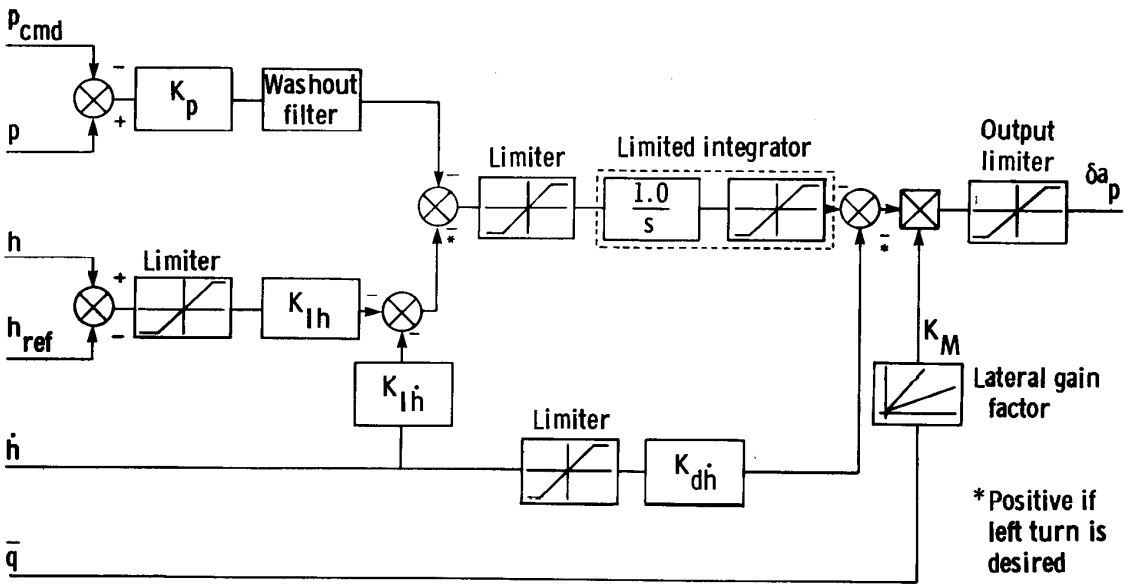

(b) Turn mode.

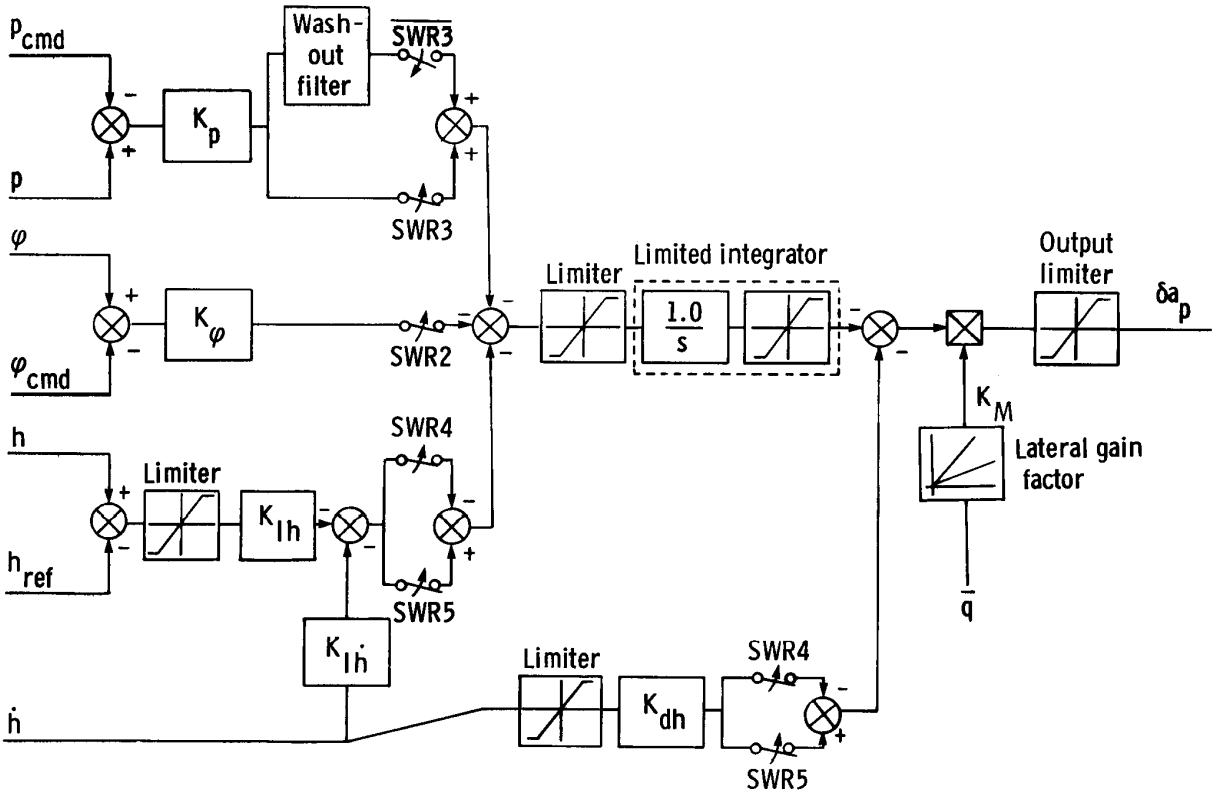

(c) Lateral control mode.

Figure 10. Concluded.

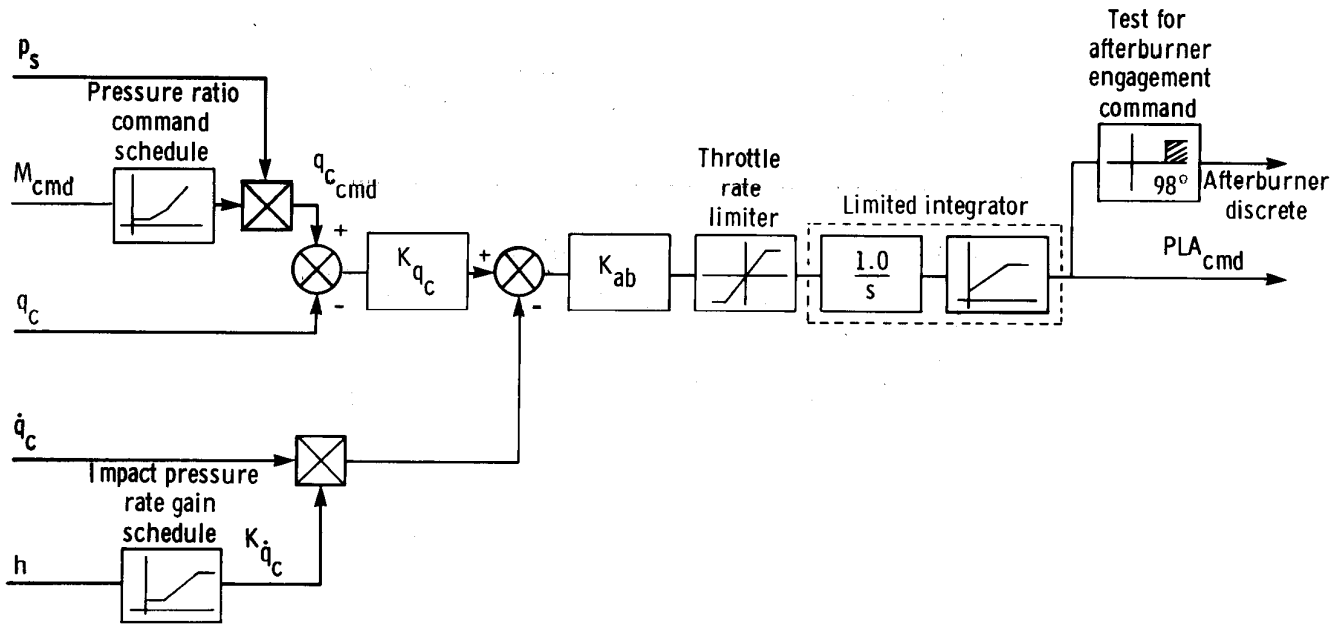

Figure 11. Throttle control mode.

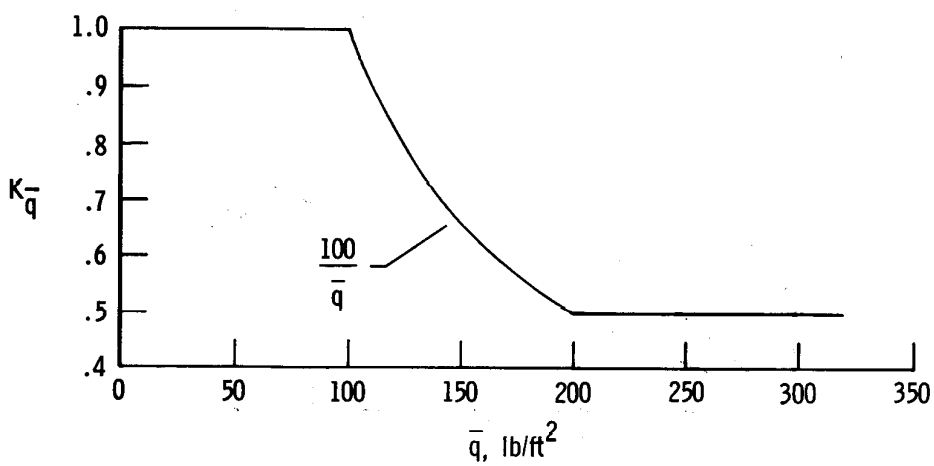

Figure 12. Pitch axis dynamic pressure gain schedule.

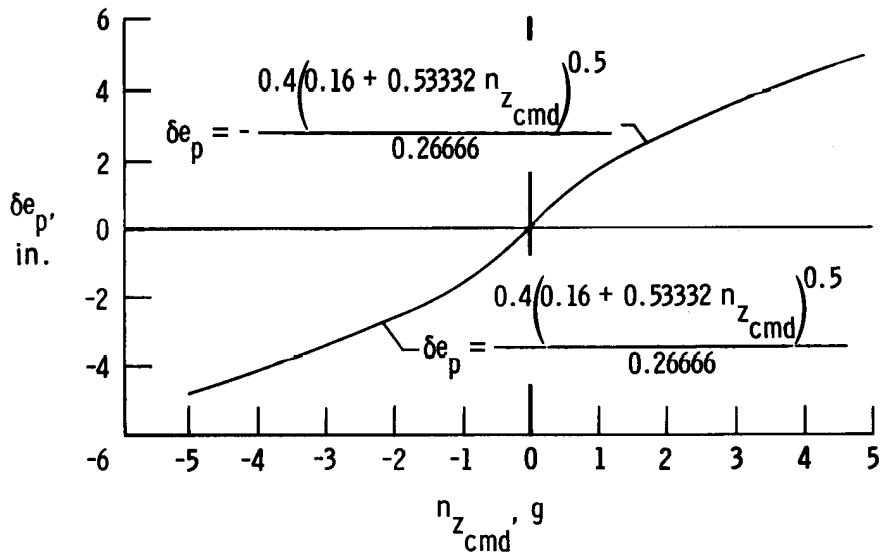

Figure 13. Inverse stick shaper.

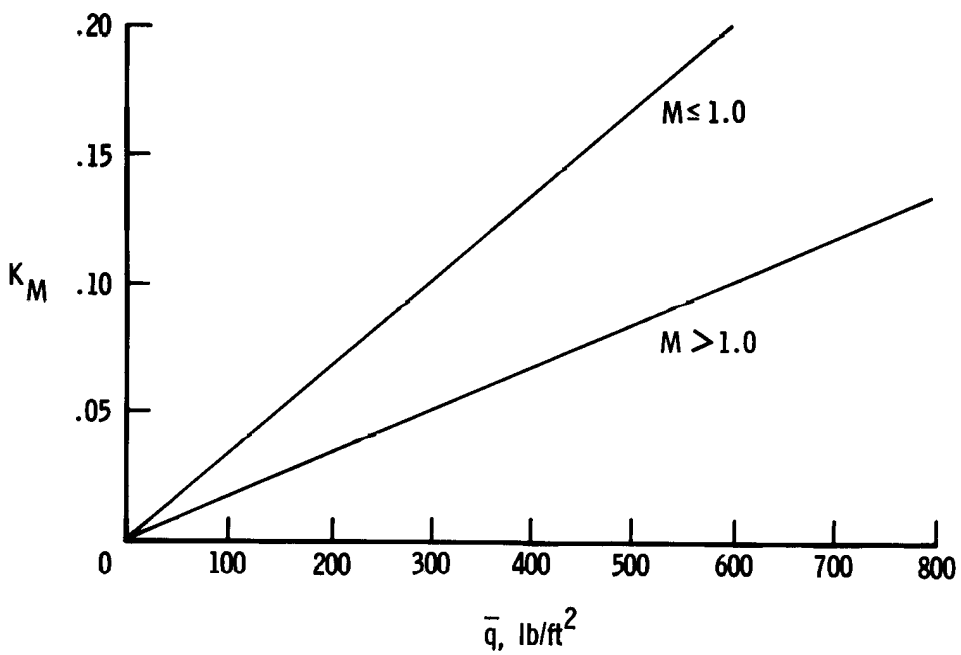

Figure 14. Lateral gain factor.

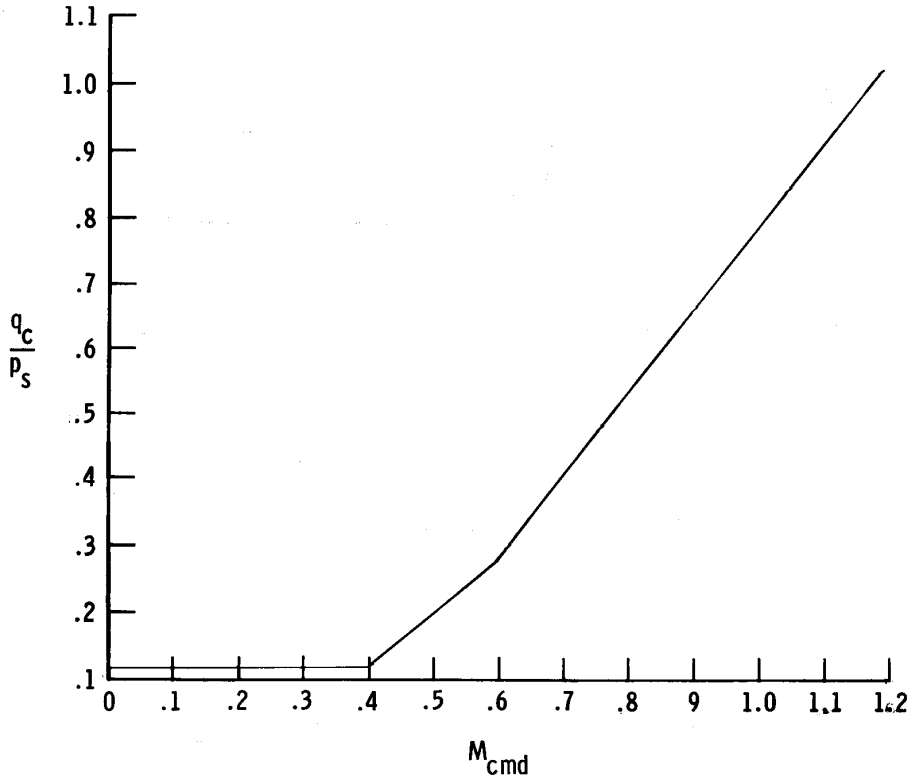

Figure 15. Pressure ratio command schedule.

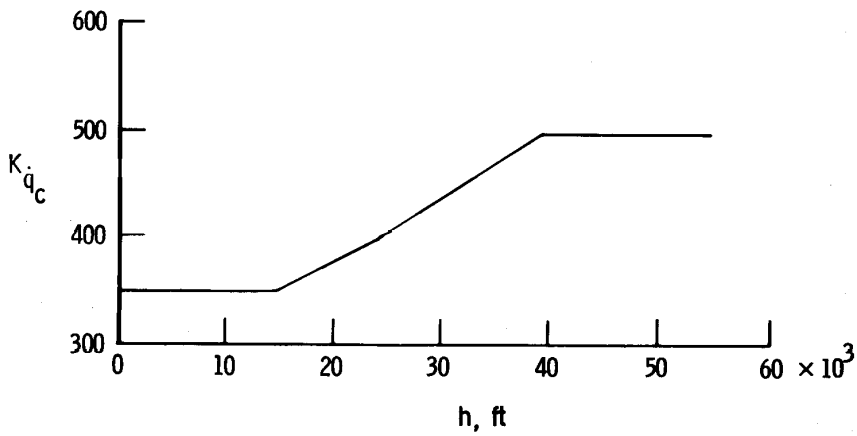

Figure 16. Impact pressure rate gain schedule.

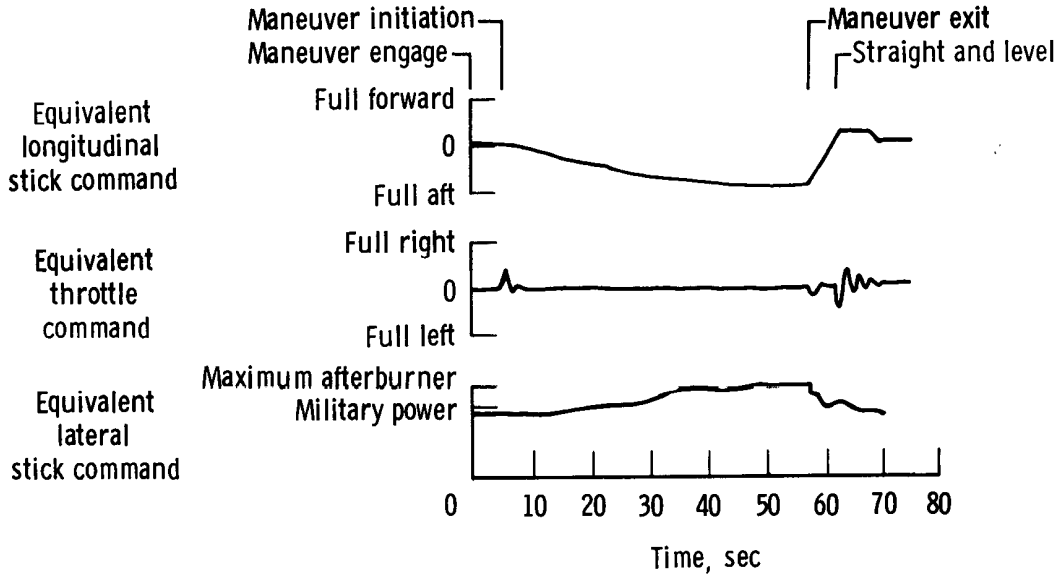

Figure 17. FTMAP commands for an 8g windup turn at M = 0.82 and h = 21,500 feet.

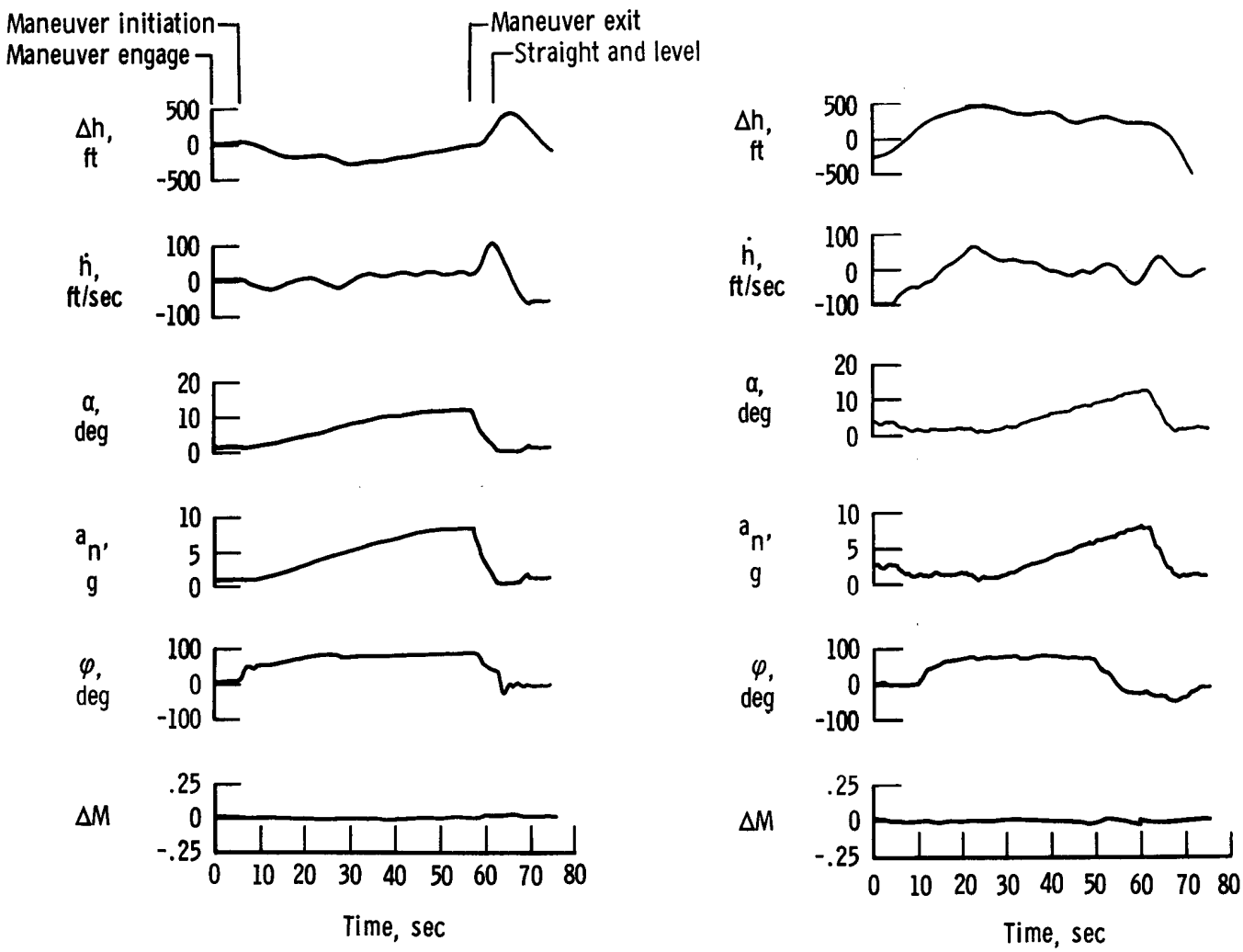

(a) FTMAP 8g windup turn. *(b) Pilot 8g windup turn.*

Figure 18. Simulation results at M = 0.82 and h = 21,500 feet.

1. Report No.	2. Government Accession No.	3. Recipient's Catalog No.
NASA TM-81372		

4. Title and Subtitle	5. Report Date
A FLIGHT TEST MANEUVER AUTOPILOT FOR A HIGHLY MANEUVERABLE AIRCRAFT	November 1982
	6. Performing Organization Code RTOP 533-03-14
7. Author(s) Ralph B. Roncoli	8. Performing Organization Report No. H-1176
	10. Work Unit No.
9. Performing Organization Name and Address Ames Research Center Dryden Flight Research Facility Edwards, California 93523	11. Contract or Grant No.
	13. Type of Report and Period Covered Technical Memorandum
12. Sponsoring Agency Name and Address National Aeronautics and Space Administration Washington, D.C. 20546	14. Sponsoring Agency Code

15. Supplementary Notes

This paper was presented orally at the AIAA Region VI 32nd Annual Student Conference held at the University of California, Irvine, April 28-May 1, 1982.

16. Abstract

A flight test maneuver autopilot (FTMAP) is currently being flown at the NASA Dryden Flight Research Facility to increase the quality and quantity of the data obtained in the flight testing of the highly maneuverable aircraft technology (HiMAT) remotely piloted research vehicle (RPRV). The FTMAP resides in a ground-based digital computer and was designed to perform certain prescribed maneuvers precisely, while maintaining critical flight parameters within close tolerances. The FTMAP operates as a non-flight-critical outer loop controller and augments the vehicle primary flight control system. The inputs to the FTMAP consist of telemetry-downlinked aircraft sensor data. During FTMAP operation, the FTMAP computer replaces normal pilot inputs to the aircraft stick and throttle positions. The FTMAP maneuvers include straight-and-level flight, level accelerations and decelerations, pushover pullups, and windup turns. The pushover pullups can be executed holding throttle or Mach number fixed. The windup turns can be commanded by either normal acceleration or angle of attack. The design specifications require the FTMAP to perform within very demanding tolerances: ±0.5° angle of attack or ±0.5g normal acceleration, ±0.01 Mach, and ±500 feet in altitude. Simulation results have shown that the FTMAP can operate quite successfully throughout the flight envelope of the HiMAT vehicle. The operational procedures, control mode configuration, and initial simulation results are discussed in this report.

17. Key Words (Suggested by Author(s))	18. Distribution Statement
Maneuver autopilot HiMAT vehicle Flight test Guidance and control	Unclassified-Unlimited STAR category 08

19. Security Classif. (of this report)	20. Security Classif. (of this page)	21. No. of Pages	22. Price*
Unclassified	Unclassified	27	A03

*For sale by the National Technical Information Service, Springfield, Virginia 22161.