NASA Technical Memorandum 86791

Description of an Experimental Expert System Flight Status Monitor

Eugene L. Duke and Victoria A. Regenie

October 1985

National Aeronautics and
Space Administration

NASA Technical Memorandum 86791

Description of an Experimental Expert System Flight Status Monitor

Eugene L. Duke and Victoria A. Regenie
Ames Research Center, Dryden Flight Research Facility, Edwards, California

1985

National Aeronautics and
Space Administration
Ames Research Center
Dryden Flight Research Facility
Edwards, California 93523

DESCRIPTION OF AN EXPERIMENTAL EXPERT SYSTEM FLIGHT STATUS MONITOR

Eugene L. Duke* and Victoria A. Regenie**
NASA Ames Research Center
Dryden Flight Research Facility
Edwards, California

Abstract

This paper describes an experimental version of an expert system flight status monitor being developed at the Dryden Flight Research Facility of the NASA Ames Research Center. This experimental expert system flight status monitor (EESFSM) is supported by a specialized knowledge acquisition tool that provides the user with a powerful and easy-to-use documentation and rule construction tool. The EESFSM is designed to be a testbed for concepts in rules, inference mechanisms, and knowledge structures to be used in a real-time expert system flight status monitor that will monitor the health and status of the flight control system of state-of-the-art, high-performance, research aircraft.

Nomenclature

AFTI	advanced fighter technology integration
ASFM	aircraft sensor and failure management
CRT	cathode ray tube
DFCS	digital flight control system
EESFSM	experimental expert system flight status monitor
HiMAT	highly maneuverable aircraft technology
KAT	knowledge acquisition tool
RTESFSM	real-time expert system flight status monitor

Introduction

An expert system capable of monitoring the health and status of flight-crucial control systems on high-performance research aircraft is being developed at the Dryden Flight Research Facility of the NASA Ames Research Center.[1] The goal of the project is to produce an expert system that will be used in an on-line, real-time application. This application system (Fig. 1) will accept telemetry downlink data from the aircraft and apply various inference mechanisms to deduce conditions of concern or alarm. The application system will interface with both a flight systems engineer on the ground and a research test pilot in the vehicle.

This expert system flight status monitor will process the large amounts of health and status data typical of current digital flight control systems. A flight control system typical of state-of-the-art digital flight control systems was chosen for analysis and study (Fig. 2); this choice was based on experience with a variety of aircraft. This system has 66 failure and 30 status indicator bits sampled at 40 Hz. The amount of data available from such a system can be at or beyond the data processing ability of a human. The goal of the expert system flight status monitor is to interpret these data into information of immediate concern to the flight systems engineer or research test pilot.

The planned development of this expert system flight status monitor consists of several phases (Fig. 3). The first phase is the development of an off-line experimental demonstration system with a knowledge base characterizing a representative aircraft system; this first phase also includes the development of a knowledge aquisition tool (KAT) to aid in the development of the knowledge base. During the second phase of the program a real-time version of the expert system flight status monitor will be interfaced to a real-time, piloted, flight-hardware-in-the-loop simulation for verification and validation of an aircraft-specific knowledge base and the inference mechanisms. The third phase of the program will be a control room application that will utilize the verified and validated application system as an on-line monitor to provide assistance to a flight system engineer during flight research missions. The final phase of development will include an additional interface with the research test pilot using telemetry uplink and downlink.

This paper describes the experimental expert system flight status monitor (EESFSM) demonstration system and KAT that were developed using Common LISP on a multiuser VAX 11/750. The EESFSM includes several different knowledge representations and inference mechanisms; in fact, it can be represented as a collection of several expert systems. The EESFSM also simulates the proposed structure of the real-time expert system flight status monitor (RTESFSM) application system with task partitioning into emulations of foreground and background tasks. The expert system is supported by a specialized KAT that allows the user to collect and properly format information for the expert system flight status monitor.

Background

The increasing complexity of modern high-performance aircraft systems requires innovative techniques that allow the flight test community to safely and effectively test these systems prior to their generalized use. These complex systems, often crucial to flight safety, require teams of engineers in a ground control station for analysis and monitoring. These systems are diverse, with applications ranging from new and unusual aircraft, such as the X-29 forward-swept wing (FSW), through advanced avionics and flight control systems, as on the advanced fighter technology

*Aerospace engineer. Member AIAA.
**Aerospace engineer.

integration (AFTI) F-16, or advanced wing design and control, as on the AFTI/F-111 or F-8 oblique wing. The current techniques available to engineers involved in flight testing include monitoring analog parameters on strip charts and CRTs and monitoring discrete information, such as system status and failure identification, on CRT displays or light boards. The engineers involved in flight testing are required to have a thorough knowledge of the system they are monitoring and to be able to identify critical events as they occur. In the brief time available during critical flight test events (which are often high-stress situations), it is difficult for any individual or group of individuals to always correctly identify and rectify, if necessary, the problems that often occur on new, advanced systems.

A major concern in advanced high-performance aircraft is the digital flight control system (DFCS). These advanced aircraft are often substantially unstable and require augmentation from a full-time, full-authority DFCS. Because these DFCSs are essential, the monitoring of the flight control system becomes critical. Problems occurring in the flight control system can cause an aircraft to be lost or a flight to be aborted or canceled, or they can force modification of the flight testing. Fast and informative displays relating the status and health of the flight control system can save a flight, a mission, or the aircraft itself. Current flight test monitoring technology involves discrete data transmitted from the aircraft and displayed on CRTs or light panels with little, if any, interpretation.

Figure 4 illustrates the levels of flight monitoring automation involved in evaluating and correcting the status and health of DFCSs. Level 1 represents early systems monitoring with primitive capabilities involving immense light panels that display the discrete information with no interpretation or evaluation, as on the early highly maneuverable aircraft technology (HiMAT) program. On the HiMAT flights the systems engineer was required to monitor over 100 lights, determine the status and health of the flight control system, and recommend the appropriate action to correct problems.

The current level of flight monitoring is level 2, in which some logical operations are performed on the discrete information downlinked from the aircraft. However, although some interpretation is available, the systems engineer is still required to determine the DFCS status and health from multiple discretes displayed on a CRT. Both the AFTI/F-16 and X-29 FSW aircraft, with their complex DFCSs, are currently at this level of automation in systems monitoring; the systems engineer still must assemble all the information and determine the status or health of the DFCS.

Level 3 automation requires a system that interprets the data and provides this information automatically to the systems engineer. Further enhancements to such a system would permit the monitoring system to automatically recommend corrective action, and relate the rationale behind those recommendations, at level 4. Level 5, represents a system that evaluates the health and status of the DFCS and automatically reconfigures the control system to accommodate this evaluation. The body of this paper discusses an EESFSM that supports the design of a system at level 3 and is capable of developing into level 4. An expert system flight status monitor is being developed that will inform the systems engineers of a flight control system problem and determine the cause of the problem. This expert system will recommend corrective action and delineate the appropriate procedures for normal and emergency operation.

An expert system capable of intelligently monitoring the flight systems of highly complex aircraft has application beyond flight research. In the emerging generation of complex, digital, systems-driven aircraft, it is difficult for a flight systems expert, a research test pilot, and the rest of a flight research support team to understand and interpret system malfunctions; however, it may be impossible for an operational pilot to effectively cope with flight system problems. This consideration has led to the concept of extending the expert system flight status monitor to an onboard system that could be developed during aircraft design, validated during flight test, and applied to production aircraft.

Description of Flight Control System

Figure 2 shows a three-channel representation of the class of flight control systems that can be accommodated by the expert system flight status monitor. This representative control system has many of the characteristics assumed in the development of the EESFSM and KAT. The preliminary knowledge base being developed is based upon this representative flight control system. To insure that the expert system flight status monitor and knowledge acquisition program are broadly applicable generic tools, these programs will be applied to the flight control systems of at least two high-performance aircraft.

The representative flight control system shown in Fig. 2 is a triplex configuration with both input and output voting. This flight control system also contains a triplex independent backup system that is dissimilar to the primary system. Each digital channel can independently switch between the primary and backup systems. The primary digital control system is a multimode system that can be configured to accommodate different phases of flight or to tolerate a limited number of input sensor failures.

Each channel of the representative flight control system has its own suite of sensors and signal conditioning hardware. The sensor outputs within a channel may be used in the primary digital control system, the backup control system, or both. Each channel receives sensor inputs and transmits the data to the other channels through a serial link. The average redundancy of the input sensors is three. Both the backup mode and the digital computers have independent dc power supplies, but the ac power (used by various sensors) is derived from the analog backup dc power. The DFCS votes on the control output to the actuators using a bit-by-bit comparison. Each channel drives an electromechanical servo valve

on self-voting actuators. The actuators determine the status of the dual hydraulic system and select the appropriate hydraulics. The flight control system monitors both the actuators and the hydraulic system to determine their viability. The coil currents on the actuator electro-hydraulic valves are monitored as are the hydraulic pressure descretes.

Overview of Expert System Flight Status Monitor

The EESFSM demonstration system is an experimental program to aid in the exploration of concepts in rules, inference mechanisms, and knowledge structures that will be used in the RTESFSM application system. The EESFSM system will be used not only as a means of testing and verifying the knowledge base but also as a postflight analysis tool. Figure 5 shows the three sources from which the EESFSM can accept data: flight data files, simulation data files, or downlink indicator bits set by the user through a terminal. The expert system accepts input data one frame at a time and processes the data from each frame using inference mechanisms similar to those that will be used in the real-time system.

Operational Modes

The EESFSM has two basic modes of operation — step and automatic-until-error. In the step mode, one frame of data is input and processed; after each frame is processed, the user has the option of changing modes, examining data buffers or deduced-fact repositories, or altering any of the options available. In the automatic-until-error mode, the EESFSM reads and processes frames until an error is detected; when an error is detected, the EESFSM reverts to the step mode. The user may select the types of errors that will cause a halt in processing and reversion to the step mode. After processing each frame of data, the EESFSM displays cautions and warnings deduced from the knowledge base and input data. This information (along with results from the application of the system operability rules) represents the sort of information that would be displayed to the systems engineer by the RTESFSM.

The automatic-until-error mode was mechanized to allow the user to process flight data without being required to step through frames of data. By allowing the user the option of specifying a range of errors that, if detected, cause the program to wait for user interaction, long uneventful flight tapes can be quickly processed and searched for errors. The options available to the user range from stopping if any failure indicator is on to the use of any rule consequent as the stopping criterion.

One of the options available to the user of the EESFSM is data recording. This capability allows the user to create a simulation data file. When the data recording option is selected, each frame of data that is input to the EESFSM is recorded on a simulation data file. These frames of data can be user input, frames read from the flight data file, or frames read from a simulation file. Thus, new simulation files can be created by mixing data from several sources to create data files for testing or demonstration purposes.

Inference Mechanisms

The EESFSM monitor consists of several separate expert systems, each with its own inference mechanism. The internal structure of the EESFSM is shown in Fig. 6. These inference mechanisms are predominately forward-chaining, data-driven processes. The aircraft sensor and failure management (ASFM) expert system uses a forward-chaining mechanism to model the aircraft failure management system and deduces conditions of concern or danger based on the failure indicator information. A metamonitor expert system deduces situations of concern based on knowledge of deductions from the ASFM expert system and the aircraft failure management system. The situations of concern deduced by the metamonitor are analyzed by a fault isolation expert system that deduces probable causes of conflicts, recommends corrective actions, and issues warnings. These expert systems provide detailed system status information and perform a function comparable to that of a flight systems expert.

The system operability expert system uses knowledge of the system effectiveness and the detailed system status information to provide a high-level assessment of the the ability of the flight control system to control the aircraft, complete a specific mission, or function in a given mode. This assessment is performed by a backward-chaining mechanism using hypotheses in an order established by the user. The order of the hypotheses is important because it provides a means for the expert system to determine priorities; the system uses this knowledge of priorities to determine the highest level at which the system is operable and provides this information to the user. The system operability rules are also used to establish the worst consequences of any additional failure. This analysis (called next worst failure analysis) is possible because of the ordering of hypotheses.

The EESFSM also includes a procedural aiding expert system that provides normal and emergency procedures information to the user. The user interface in the EESFSM provides system status information, explanations, and rule maintenance.

Explanation Facilities

When the EESFSM pauses between frames in the step mode, the user can ascertain which indicators are on, which rules have been used, and which facts have been deduced. For any deduction, the user can request an explanation of how that deduction was reached; the EESFSM will use the deduction repositories, input data, and knowledge base to reconstruct its reasons for asserting any deduction.

When defining the knowledge base, the user may also force automatic explanation for conclusions that either indicate emergency conditions or invoke special procedures. This is accomplished by establishing an automatic explanation level

when the user orders the consequents of the system operability rules.

Expert System Rules

The rules within an expert system describe the knowledge one wishes to define about a process or object. The rules used in the EESFSM serve to characterize the flight control system of a redundant digital-fly-by-wire vehicle. This characterization includes a definition of the flight control system health and status information, a definition of redundant system elements, a model of the vehicle's failure management system, and a definition of emergency procedures associated with flight control system failures. Each rule may be thought of as a simple fact or procedure. Thus, using a traditional if-then representation, the following might be relevant rules:

If the pitch rate gyros have failed,

then the longitudinal rate-damping mode has failed.

If the primary flight control system has failed and the backup flight control system has failed,

then the procedure is ejection.

The value of these if-then production rules is that the system can be defined using small "chunks" of information without having to link these chunks together into a well-defined total system description. The total system is defined only by the collection of the individual rules into a knowledge base. These facts are actually linked by the inference mechanism, which tests whether the condition or state represented by the antecedents of a rule accurately describe the current system state before applying a rule. Only those rules applicable to the current system state are used at any one time. As the rules are used, the inference mechanism adds the consequents of the rule to the system status description. Thus, in using production rules in this forward-chaining process, the inference mechanism starts from a few system facts and reaches whatever conclusions are defined in the individual rules. As long as one rule has been used in a pass through the knowledge base, the inference mechanism must continue trying rules on each successive pass. The inference mechanism stops processing rules only when the last pass proceeds with no rules being applied.

The EESFSM uses several different representations of rules (Fig. 6). Some of these representations are in the form of traditional if-then production rules. However, many of the rules are defined in unusual formats to facilitate definition of the knowledge base and to increase execution speed of the inference mechanisms.

The basic rule representations were established to eliminate, wherever possible, the traditional if-then production rules. This was motivated by the relationship between the execution time of production rules and the number of rules applied. While not an exact formulation, this relationship has exponential characteristics; that is, as the number of rules applied increases, the time required to apply them increases exponentially. The partial elimination of production rules has been accomplished by recognizing that the total system knowledge base could be partitioned into multiple knowledge bases that could be processed sequentially. Some of these subpartitions of the total system knowledge base required the use of production rules; however, it was recognized that in several of these subpartitions the power and computational expense of production rules were inappropriate. The subpartitioning of the total system knowledge base is described in detail in the following paragraphs.

The total system knowledge base used with the EESFSM is actually composed of several knowledge bases, each of which may be considered as a separate knowledge base supporting the collection of limited-domain expert systems that constitute the EESFSM. Each of these knowledge bases is distinct, although the rules in these knowledge bases are often applied to common repositories of system status information.

The indicator rules are simply lists of names used to identify bits or words in the flight system time-history input to the expert system flight status monitor. Three distinct types of indicators are used: failure indicators, status indicators, and cross-channel assessment indicators. The names of these indicators are used when the data structures of the input frames are defined and in the inference mechanism of the expert system. Within the inference mechanism of the EESFSM, when a bit or word corresponding to the user-defined location of an indicator is set (such as on or true), the inference mechanism adds a fact, which identifies a specific indicator as being on, to the main system status repository.

Multiple-element indicator rules are lists of indicators that are similar in function. The primary purpose of these rules is to easily accommodate redundant elements. When these rules are applied, a fact that identifies the number of failures of the type defined by the multiple-element indicator rule is added to the main system status repository. Two types of multiple-element indicator rules are used: intrachannel and interchannel multiple-element sensor rules. The intrachannel rule is used to identify failures of redundant elements within a single channel of the flight control system; the interchannel rule is used to identify failures in redundant elements within the flight control system as a whole.

Traditional if-then production rules are used to model the vehicle's failure management system. These rules can also be used to model the interconnections and dependencies within the flight system. Two types of these rules are used within the expert system flight status monitor: intrachannel and interchannel system rules. These rules use the facts derived from the indicator and multiple-element indicator rules to deduce information about the vehicle's flight system state. This information is used to detect flight system failures that might not be included in the vehicle's failure management system or to identify failures within the fail-

ure management system itself. With the capability of entering and accomodating rules that can detect flight system failures not included in the vehicle's failure management system, the EESFSM provides a mechanism for correcting design deficiencies that could be too costly to correct by modifying the vehicle. Flight system rules can also be used to generate messages identifying conditions of interest or concern.

Conflict detection rules identify failures or discrepancies in the vehicle's failure management system. These rules compare the system health and status indicators provided by the vehicle failure management system with facts deduced by applying the system rules. The intrachannel conflict rules are used to identify conflicts within a channel and consist of pairs of indicator-like names; the interchannel conflict rules are simply indicator-like names that are compared across channels. Each conflict rule has an associated definition of severity that is used to determine the appropriate actions to be taken if a given conflict is detected.

Conflict resolution rules are used for fault isolation or procedure initiation when conflicting information is detected by the conflict rules. These rules can be used to detect specific failures within the vehicle's failure management system or within the onboard failure detection system. The entire system status information repository is available to these rules. Additionally, these rules may initiate queries to the user for information about the vehicle system. These rules can add facts to the system information repository or initiate procedures that may serve to isolate faults.

Procedural rules are have the primary purpose of mechanizing the emergency procedures associated with failures in the flight system. However, procedural rules may be used to define any procedure that might be needed. Procedural rules also contain information associated with each antecedent clause that identifies where a specific fact should be sought (in the system status information repository or from the user).

System operability rules are used to provide high-level information on the health and status of the vehicle flight system in general, but they also provide information on the particular control system mode being used. These rules are meant to provide the user with only the most general information (such as, "the flight system is operational" or "the longitudinal rate damping mode is not operational"). These rules are structured as traditional if-then production rules. Their consequents are used to establish a hierarchical set of hypotheses for the backward-chaining inference engine.

Knowledge Acquisition Tool

The knowledge acquisition tool (KAT) used with the EESFSM and designed to support all phases of the expert system flight status monitor project provides a user-friendly interface to the knowledge base. This program has facilities for entering all types of rules used within the EESFSM. In addition to supporting the expert system, the KAT is a powerful tool for developing documentation on the flight control system of an aircraft. The knowledge base developed using the KAT can also lead to an understanding of a flight control system that augments more traditional approaches to flight system documentation.

The power of a knowledge acquisition program such as the KAT, which is tailored to a specific application, is that the program can aid the user in the definition of the knowledge base by generating prompts and explanations that are more appropriate for a domain expert than for a computer scientist or knowledge engineer. The KAT is designed to be used by flight systems engineers.

This knowledge acquisition program was developed after a brief but painful experience with defining the knowledge base directly. Some of the problems encountered before the development of the knowledge acquisition program could have been alleviated had a general-purpose knowledge engineering program been used; however, many of these difficulties are endemic to knowledge engineering in general.

The main problem addressed by the KAT is application-unique and specialized knowledge (rule) representations. By building a KAT specifically for flight system applications, the rules described in the preceding section (Expert System Rules) could be accommodated. This allowed the expert system designers the freedom to apply their insights into and knowledge of flight systems to build an efficient and generic set of inference mechanisms. The designers used the KAT to tailor the expert system to the application rather than attempting to tailor the application to the KAT.

Another problem addressed by the KAT is that of consistency in the clauses of rules. Any differences in clauses intended to be the same can cause additional rules to be used or can cause rules not to be used as anticipated. On the surface this seems a trivial problem, but when one considers a knowledge base of several hundred rules, the problem of clause consistency can become a time consuming and tedious exercise. The KAT developed to support the EESFSM provides features that minimize, if not eliminate, the problem of clause consistency.

Summary

This paper describes an experimental version of an expert system flight status monitor being developed at the Dryden Flight Research Facility of the NASA Ames Research Center. This experimental expert system flight status monitor (EESFSM) is being developed as a testbed for concepts in rules, inference mechanisms, and knowledge structures to be used in a real-time expert system that will monitor the health and status of the flight control systems of state-of-the-art, high-performance, research aircraft.

The EESFSM is supported by a knowledge acquisition tool (KAT) that provides a user-friendly interface to the knowledge base. This program has facilities for entering all types of rules used within the EESFSM. In addition to supporting the expert system, the KAT is a powerful tool for developing documentation on the flight control system of an aircraft. The knowledge base developed using the KAT can also lead to insights and promote an understanding of the flight control system that augments more traditional approaches to flight system documentation. The expert system flight status monitor and KAT are designed to be generic, capable of accommodating a broad class of flight control systems.

Reference

[1]Regenie, Victoria A., and Duke, Eugene L., Design of an Expert-System Flight Status Monitor, NASA TM-86739, 1985.

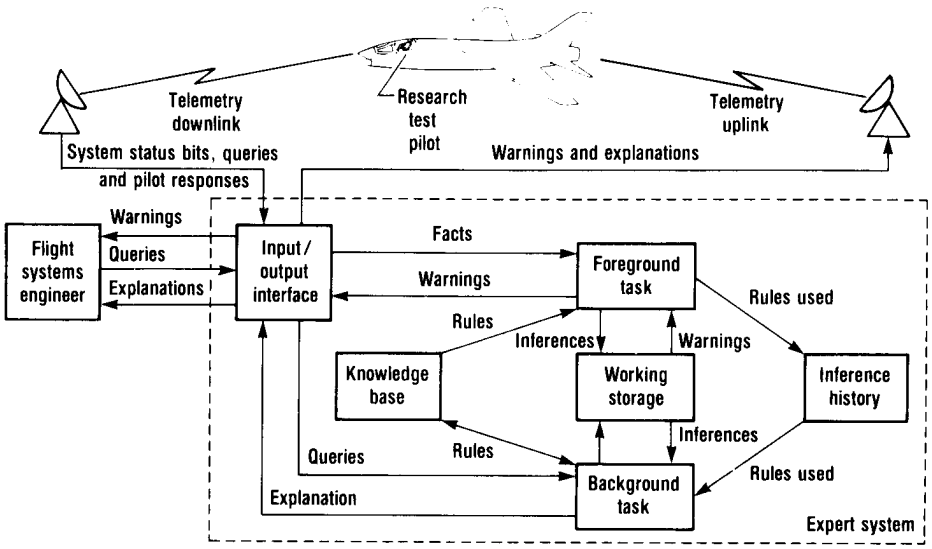

Fig. 1 Overview of real-time expert system flight status monitor (RTESFSM).

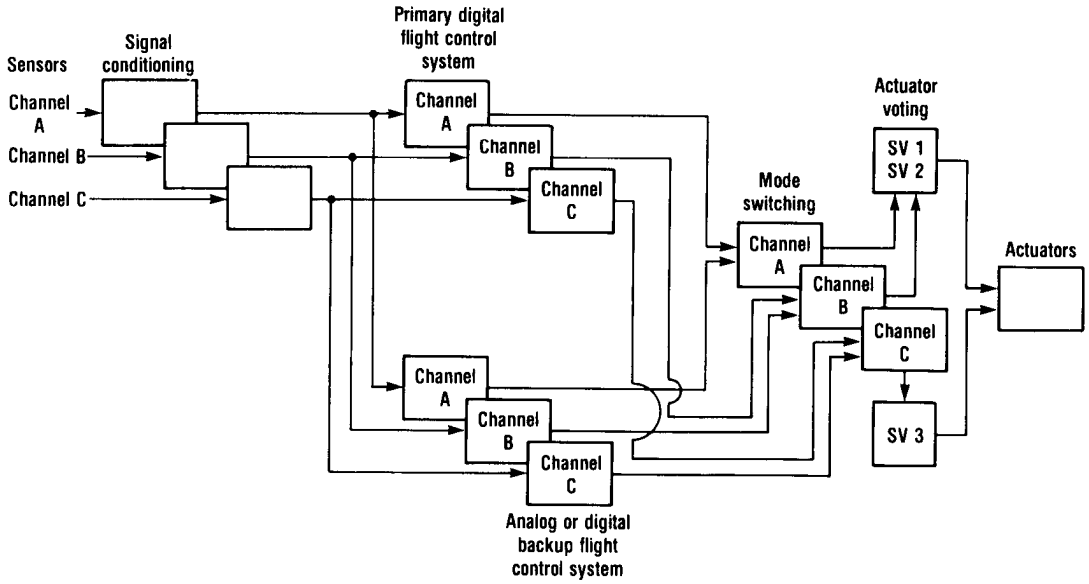

Fig. 2 Overview of representative digital flight control system.

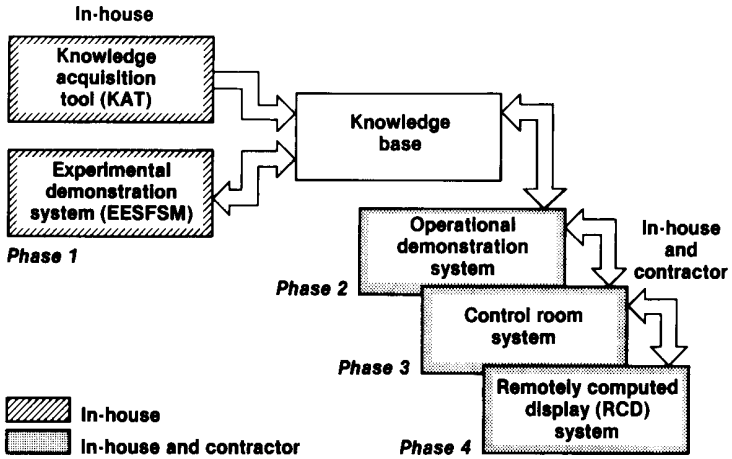

Fig. 3 Development process for expert system flight status monitor.

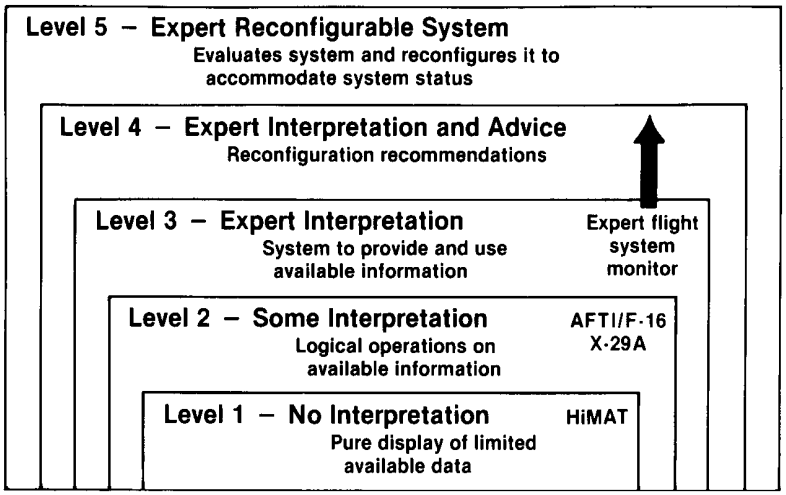

Fig. 4 Levels of information technology.

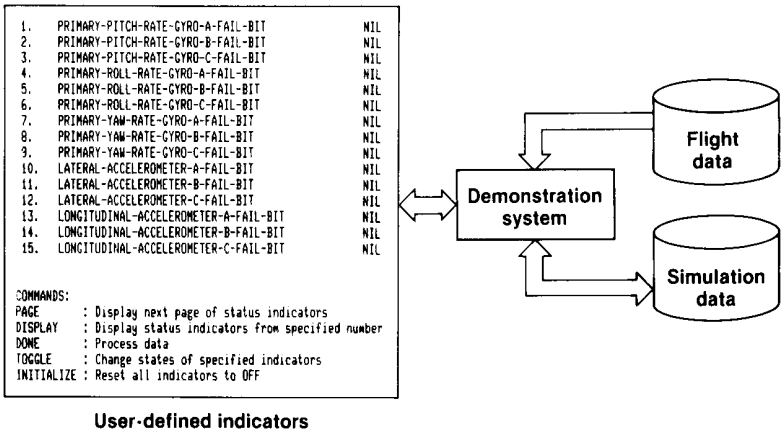

Fig. 5 EESFSM demonstration system.

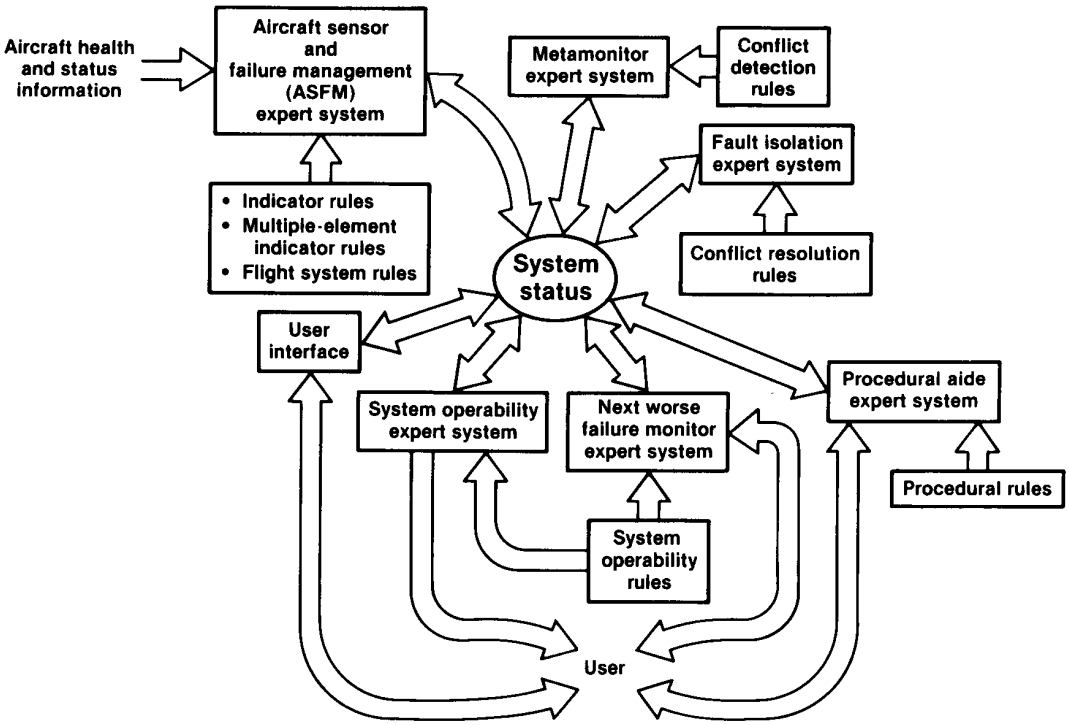

Fig. 6 Internal structure of EESFSM.

1. Report No.	2. Government Accession No.	3. Recipient's Catalog No.
NASA TM-86791		

4. Title and Subtitle	5. Report Date
DESCRIPTION OF AN EXPERIMENTAL EXPERT SYSTEM FLIGHT STATUS MONITOR	October 1985
	6. Performing Organization Code
7. Author(s) Eugene L. Duke and Victoria A. Regenie	8. Performing Organization Report No. H-1317
	10. Work Unit No. RTOP 505-34-11
9. Performing Organization Name and Address NASA Ames Research Center Dryden Flight Research Facility P.O. Box 273 Edwards, CA 93523-5000	11. Contract or Grant No.
	13. Type of Report and Period Covered Technical Memorandum
12. Sponsoring Agency Name and Address National Aeronautics and Space Administration Washington, D.C. 20546	14. Sponsoring Agency Code

15. Supplementary Notes

Prepared as AIAA Paper 85-6042-CP for presentation at the AIAA Computers in Aerospace V Conference, Long Beach, California, October 21-23, 1985.

16. Abstract

This paper describes an experimental version of an expert system flight status monitor being developed at the Dryden Flight Research Facility of the NASA Ames Research Center. This experimental expert system flight status monitor (EESFSM) is supported by a specialized knowledge acquisition tool that provides the user with a powerful and easy-to-use documentation and rule construction tool. The EESFSM is designed to be a testbed for concepts in rules, inference mechanisms, and knowledge structures to be used in a real-time expert system flight status monitor that will monitor the health and status of the flight control system of state-of-the-art, high-performance, research aircraft.

17. Key Words (Suggested by Author(s))	18. Distribution Statement
Expert systems Flight test Flight research Avionics Flight control	Unclassified — Unlimited STAR category 05

19. Security Classif. (of this report)	20. Security Classif. (of this page)	21. No. of Pages	22. Price*
Unclassified	Unclassified	9	A02

For sale by the National Technical Information Service, Springfield, Virginia 22161.