NASA Technical Memorandum 86746

Expert Systems Development and Application

Eugene L. Duke and Victoria A. Regenie

October 1985

National Aeronautics and
Space Administration

NASA Technical Memorandum 86746

Expert Systems Development and Application

Eugene L. Duke and Victoria A. Regenie
Ames Research Center, Dryden Flight Research Facility, Edwards, California

1985

National Aeronautics and
Space Administration
Ames Research Center
Dryden Flight Research Facility
Edwards, California 93523

EXPERT SYSTEMS DEVELOPMENT AND APPLICATION

Eugene L. Duke and Victoria A. Regenie

NASA Ames Research Center
Dryden Flight Research Facility
Edwards, California

ABSTRACT

This paper describes current research at the Dryden Flight Research Facility of the NASA Ames Research Center in the application of expert systems to problems in the flight research environment. In what is anticipated to be a broad research area, a real-time expert system flight status monitor has been identified as the initial project. This real-time expert system flight status monitor is described in terms of concept, application, development, and schedule.

INTRODUCTION

The flight research environment provides numerous challenges in engineering and management. Flight research is the culmination of a long progression of activities that begins with concepts and proceeds through design, test, simulation, and qualification phases. At each step in this progression, diverse techniques and tools are applied to the problem, and more and more information and knowledge are accumulated. During flight research, systems, knowledge, personnel, and schedules must all coordinate. The accomplishment of a successful flight program requires the coordination of both technical matters and resources. Quite often there are high stakes, calculated risks, and widespread visibility associated with a flight research program. All this contributes to the challenges and demands of flight research. The flight research environment is also rich in opportunites; the numerous challenges present situations where innovative thinking and revolutionary methods can have tremendous payoffs in terms of cost, schedule, safety, and research. This paper discusses research opportunities in expert systems applications to areas of flight research engineering and describes the research currently in progress at the Dryden Flight Research Facility of the NASA Ames Research Center. To effectively manage the design, qualification, and flight test of complex, systems-driven aircraft, new methods must be employed. Vehicles such as the advanced fighter technology integration (AFTI) F-16, the highly maneuverable aircraft technology (HiMAT), and the X-29 forward-swept wing (FSW) aircraft incorporate numerous subsystems and flight-crucial controls that are extremely complex; they can both interact and fail in an overwhelming number of ways. Managing the development and conducting the flight research of these vehicles are exceedingly difficult, even with the large teams of experts that are assembled. One's understanding of these complex systems even under nominal conditions is limited. When the burdens of potentially life-threatening failures and real-time decision making are added, human experts are often unable to assimilate effectively the information available; their recall of the details of these complex systems is often impaired by the knowledge of potential or impending disaster.

Expert systems technology has been identified as a potential solution to some of these problems. This technology has the potential for bringing automation and computer-aided decision making into areas that are time and information intensive. Expert systems technology was chosen because conventional programming techniques are too cumbersome and expensive to even consider for any single research vehicle. Conventional programming techniques would also require extensive software modification for each new research vehicle; this modification process, using conventional programming techniques, could easily be more difficult, time consuming, and costly than the original programming task. Using expert systems technology, the aircraft-specific information can be separated from the program control structure allowing a much easier transition to new vehicles than is possible with conventional programs. A further advantage of expert systems technology is the provision for building a system incrementally, without the requirement for program modification or recompilation.

The development of an expert system flight status monitor has been chosen as the first project in the application of expert systems because of the high payoff potential in the area of flight safety. A potential secondary benefit is increased flight test efficiency, which would be achieved when problems that can be corrected in flight are recognized as such during the flight (not days later, as is often the case).

OVERVIEW OF PROJECT

This project, the application of expert systems technology to the problems of flight research, has the goal of providing useful, high-leverage programs while conducting applications research in expert systems. Achieving this goal requires that the applications research focus on realistic problems within real-world constraints. By bringing this technology to bear on problems within the flight research environment, the strengths and deficiencies of state-of-the-art expert systems technology can be explored while producing an immediately useful product. This project is designed to capitalize on the strengths of expert systems by attempting to solve problems unamenable to conventional programming techniques; deficiencies will be identified and referred to organizations involved in expert systems research.

The approach of this project is to identify a high-payoff application and focus on that problem with an in-house team assisted by government, industry, and university partners. The development of an in-house team capable of understanding and implementing expert systems is crucial, and it is assumed that it is easier to train systems engineers to become expert systems technologists than the converse. However, it is also assumed that knowledgeable expert systems technologists cannot be created out of a vacuum and that outside experts will be needed to assist in applications, to provide advice, and to conduct research.

The development of expert systems promises very real benefits, with possibilities of creating a new generation of systems capable of solving problems that now can be solved only by human experts. By focusing on immediate and tractable applications for expert systems, this technology can be translated into the flight research environment. The purpose of this project is to aid that translation.

EXPERT SYSTEM FLIGHT STATUS MONITOR

The area chosen at Ames-Dryden for initial applications research in expert systems technology is real-time flight research monitoring and control. This area was selected because it offers significant technological challenges and has the potential for high impact in terms of flight efficiency and safety. The first application in this area is an expert system flight status monitor for the X-29 FSW aircraft.

Because the X-29 FSW aircraft is highly unstable aerodynamically, the flight control system is required for stabilization; failures in this flight-crucial control system can have immediate and disastrous effects on vehicle performance. The identification, interpretation, and and prediction of the consequences of flight control system failures are activities that require real-time decision making and a detailed knowledge of the interconnection and interaction of the elements of that system.

While not as complex as some research or even production avionics systems, the X-29 FSW flight control system has many features that are representative of the state of the art. The X-29 FSW flight control system was selected because it is complex enough to support generic research in the use of expert systems to monitor state-of-the-art systems but not so complex that the sheer magnitude of the problem would overwhelm applications research in expert systems technology.

Description of the Expert System Flight Status Monitor

The intended purpose of the expert system flight status monitor is to increase the safety of research flying for the X-29 FSW aircraft by providing real-time interpretation, diagnosis, and prediction of consequences of failures in the flight control system. This will be accomplished using a ground-based expert system that monitors the telemetry downlink from the vehicle and provides "intelligent" interpretation of the failure and status words to a flight systems engineer in the control room and the pilot in the aircraft. Figure 1 illustrates the expert system flight status monitor as it will be fully developed and deployed. The specific goals of the expert system flight status monitor project are to establish a set of rules to characterize a flight-crucial control system, to define a generic expert system structure applicable to a broad class of advanced high-performance aircraft, to investigate knowledge representations applicable to the real-time application of an expert system flight status monitor, to explore issues related to real-time applications of expert systems, and most importantly, to demonstrate and apply a real-time expert system flight status monitor capable of providing "intelligent" interpretation of system status information.

The information available on the aircraft data bus is also available to the ground-based control room. This information includes nearly 100 failure and status indicator bits sampled at 40 Hz and provided to the flight systems engineer for monitoring the health and status of the aircraft. In the past at Ames-Dryden, this information has been presented to the systems engineer in an unprocessed form or with some processing to provide limited interpretation. (Figure 2 graphically depicts this level-1 situation and provides a context for the goals of the expert system flight status monitor project.) The need for an expert system flight status monitor arises from the quantity of data available, the complexity of the flight control system, and the criticalness of the flight control function.

The expert system flight status monitor (Fig. 1) will process the telemetry downlink

failure and status words using a ground-based symbolic processor. The failure words will be processed through a rule-based model of the aircraft failure management system to arrive at an independent assessment of the state of the vehicle flight control system. All failures detected by this process will be interpreted by another set of rules to arrive at high-level evaluations of the overall health and status of the aircraft. The failures detected by the expert system will also be compared to the status indicator words that are output by the aircraft failure management system; rules will be developed to resolve discrepancies between the onboard system and the expert system. Conditions severe enough to warrant attention will result in cautions and warnings being issued to both the systems engineer and the research test pilot. Either the pilot or the systems engineer will be able to query the expert system for an explanation of the cautions and warnings or request a more detailed description of the system state.

While not part of the Ames-Dryden expert system flight status monitor project, it is of interest to consider such an application in a context having somewhat more breadth than the flight research environment. If an expert system flight status monitor were to be developed and validated during the flight testing of a production aircraft, that expert system could be incorporated into the vehicle to provide the operational pilot with the expertise and assistance required for understanding and managing flight systems failures in the next generation of single-pilot, high-performance aircraft. By demonstrating the expert system flight status monitor in the flight research environment it is expected that the application of expert systems technology will lead from the research laboratory to regular, operational use.

Development Process

As stated previously, the approach to be taken in this project is to develop an in-house NASA team assisted by government, industry, and university partners. Fundamental research in real-time expert systems is being funded by NASA Ames-Dryden through university grants. An in-house effort is currently underway to develop a knowledge base that completely characterizes the X-29 FSW flight control system within a generic structure; in addition, there is an ongoing in-house examination of the issues of knowledge acquisition and knowledge representation. The real-time system illustrated in Fig. 1 will be developed using in-house and contractor personnel.

In-house development of an off-line experimental demonstration system will precede the joint development of the real-time system. The basic knowledge base for the real-time system will be developed during the implementation of the experimental demonstration system. The development of the real-time system will proceed in three steps: First, an off-line operational demonstration system will be implemented to develop the structure of the real-time system and to determine the extent of the knowledge base that can be applied in real time. Second, a real-time system will be implemented using the real-time functions emulated in the operational demonstration system; this real-time system will first be interfaced to the X-29 FSW hardware-in-the-loop simulation for verification and validation, then to the control room computers for operational use by a flight systems engineer. Third, the control room system will be expanded, providing a cockpit interface for the pilot using multifunction display and the telemetry uplink.

Status of Expert-System Flight Status Monitor

The purpose of the off-line experimental demonstration system is to investigate knowledge acquisition and knowledge representation. This system will be used to develop a knowledge base that in some sense completely characterizes the X-29 FSW aircraft flight control system. This effort is currently in the second phase of development. The first phase of this effort (phase 0) concentrated on rapidly developing a prototype system having a limited capability and restricted knowledge base within a framework reflecting the best understanding of the structure desired in a total expert system flight status monitor. Although not all the knowledge base was structured into rules, the phase-0 system contained approximately 200 rules. This phase-0 system was developed to accommodate a somewhat generic aircraft system model that incorporated features both to speed execution and to minimize the difficulty of compiling a knowledge base. Several key lessons were learned from the implementation of the phase-0 system, not the least of which was that systems engineers could implement an expert system. The implementation of the phase-0 system also demonstrated that knowledge engineering required an examination of the aircraft flight control system in nontraditional ways; this examination revealed many relationships and systems interconnections that had not been previously considered. Another lesson learned by implementing the phase-0 system was that the structure of the aircraft system could be significantly generalized and that generalization would create opportunities not only for reducing the number of rules required (and hence, the difficulty of the knowledge engineering process) but also for providing a more representative and possibly faster expert system.

The phase-1 demonstration system is currently in development. The assumed aircraft system structure was based on consideration of a number of aircraft whose flight control system characteristics were familiar to systems engineers at Ames-Dryden. Figure 3 shows a three-channel (triply redundant) version of this generic aircraft system structure. For the phase-1

system, a knowledge-acquisition program is being implemented first. The first implementation of the actual expert system will follow the implementation of the knowledge-acquisition program. The phase-1 experimental demonstration system is being developed with features that will allow simple automatic translation of a verified and validated knowledge base in a language such as FORTRAN, C, or Ada for faster execution on a general-purpose real-time minicomputer.

The project is just beginning to progress from the operational demonstration system to the remotely computed display system. The contracting process has been initiated, and a contract award is expected by October 1985. The projected deployment date for the control room version of the expert system flight status monitor is August 1986, with the completed real-time expert system flight status monitor using remotely computed displays (Fig. 1) being deployed by February 1987.

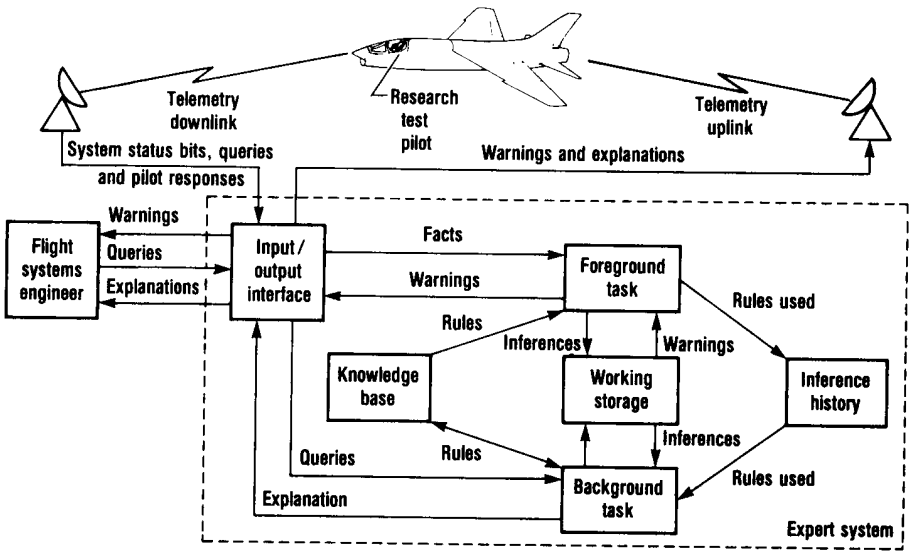

Fig. 1 Overview of expert system flight status monitor.

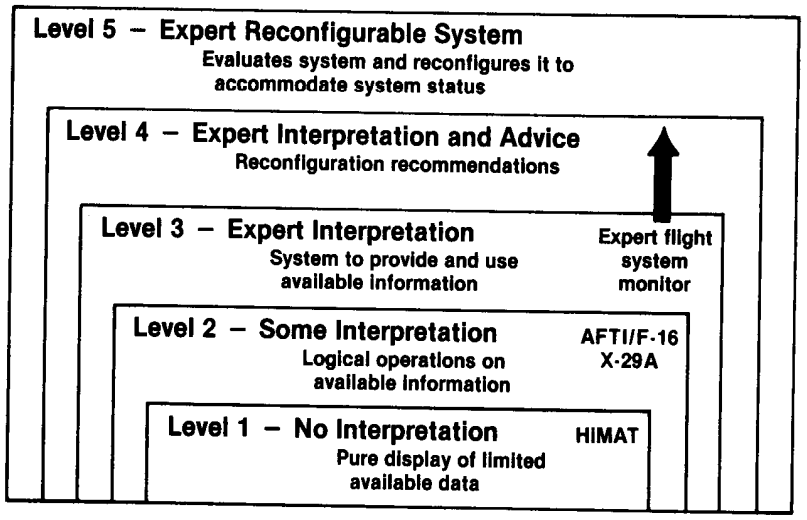

Fig. 2 Levels of information technology.

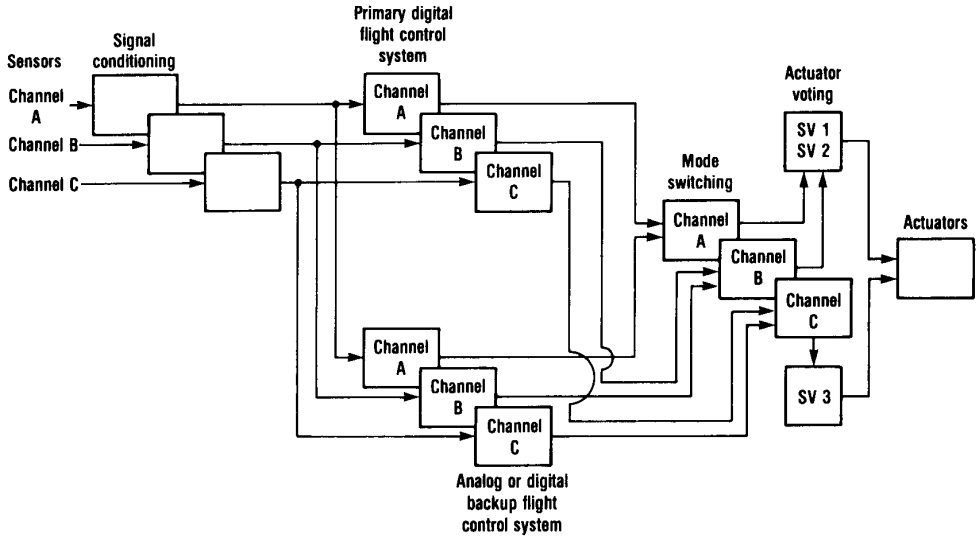

Fig. 3 Overview of representative digital flight control system.

1. Report No.	2. Government Accession No.	3. Recipient's Catalog No.
NASA TM-86746		

4. Title and Subtitle	5. Report Date
EXPERT SYSTEMS DEVELOPMENT AND APPLICATION	October 1985
	6. Performing Organization Code
7. Author(s) Eugene L. Duke and Victoria A. Regenie	8. Performing Organization Report No. H-1310
	10. Work Unit No. RTOP 505-34-11
9. Performing Organization Name and Address NASA Ames Research Center Dryden Flight Research Facility P.O. Box 273 Edwards, CA 93523-5000	11. Contract or Grant No.
	13. Type of Report and Period Covered Technical Memorandum
12. Sponsoring Agency Name and Address National Aeronautics and Space Administration Washington, D.C. 20546	14. Sponsoring Agency Code

15. Supplementary Notes

Prepared for presentation at the IEEE Symposium on Expert Systems in Government, McLean, Virginia, October 23-25, 1985.

16. Abstract

This paper describes current research at the Dryden Flight Research Facility of the NASA Ames Research Center in the application of expert systems to problems in the flight research environment. In what is anticipated to be a broad research area, a real-time expert system flight status monitor has been identified as the initial project. This real-time expert system flight status monitor is described in terms of concept, application, development, and schedule.

17. Key Words (Suggested by Author(s))	18. Distribution Statement
Expert systems Flight test Flight research Avionics Flight control	Unclassified — Unlimited STAR category 05

19. Security Classif. (of this report)	20. Security Classif. (of this page)	21. No. of Pages	22. Price*
Unclassified	Unclassified	6	A02

For sale by the National Technical Information Service, Springfield, Virginia 22161.