NASA Technical Memorandum 86731

Qualification Needs for Advanced Integrated Aircraft

Dale A. Mackall

August 1985

National Aeronautics and
Space Administration

NASA Technical Memorandum 86731

Qualification Needs for Advanced Integrated Aircraft

Dale A. Mackall
Ames Research Center, Dryden Flight Research Facility, Edwards, California

1985

National Aeronautics and
Space Administration
Ames Research Center
Dryden Flight Research Facility
Edwards, California 93523

QUALIFICATION NEEDS FOR ADVANCED INTEGRATED AIRCRAFT

Dale A. Mackall*

NASA Ames Research Center
Dryden Flight Research Facility
Edwards, California

Abstract

In an effort to achieve maximum aircraft performance, designers are integrating aircraft systems. The characteristics of aerodynamics, vehicle structure, and propulsion systems are being integrated and controlled through embedded, often flight-critical, electronic systems. This paper addresses the qualification needs for such highly integrated aircraft systems. Based on flight experience with research aircraft, a set of test capabilities is described which allows for complete and efficient qualification of advanced integrated aircraft.

Nomenclature

DEEC	digital electronic engine control
DEFCS	digital electronic flight control system
EMD	engine model derivation
EMI	electromagnetic interference
FMET	failure modes and effects testing
HIDEC	highly integrated digital engine control
ISA	integrated servoactuator
ITF	Integrated Test Facility
LVDT	linear variable displacement transducer
RPRV	remotely piloted research vehicle
STOL	short takeoff and landing

Introduction

From the first integrated system program, the YF-12 cooperative control program, to the most recent, the X-29 forward-swept wing program, the trend in aircraft research at the Ames Research Center, Dryden Flight Research Facility has been to control the previously adverse or undesirable interactions between subsystems to improve performance. At certain flight conditions the YF-12 propulsion system's bypass door operation had considerable undesired control authority.[1] By using the undesired bypass door effect through proper electronic control, the flightpath performance of the aircraft was improved by a factor of 10. The X-29 digital flight control system allows the 35-percent staticly unstable aerodynamic configuration to fly with level 1 flying qualities.

The use of digital electronic control systems to take advantage of the undesirable or unique characteristics of an aircraft system has led to a new class of advanced integrated aircraft. A leading issue in the development of this new class of aircraft is the complete and efficient testing or qualification of the aircraft's systems and performance. The improved performance obtained by the integration places an equivalent increase in flight criticality for the avionics that accomplishes it. Full-authority flight control for staticly unstable airframes is a prime example. More avionics systems, such as the weapon systems in an integrated flight-fire control system, are becoming flight safety related. The need to assure safe and efficient flight testing for this new class of aircraft places new requirements on the test capabilities for aircraft qualification.

There are many steps in qualifying an aircraft for flight; however, this paper addresses only the validation of the design to a system performance specification, once all the subsystem testing has been completed. This testing is to validate the performance of a design, and is not intended to show proper implementation. "Integrated systems aircraft" is defined and the requirements for testing this type of aircraft are discussed. Such requirements include testing capabilities, and the type of facility in which to perform the tests — namely, the proposed NASA Ames-Dryden Integrated Test Facility.

Integrated Systems Aircraft

Popular new terms over the past few years include the "integrated systems aircraft" and "synergistic design." To the degree possible, every aircraft has used the individual components of its design to provide a cooperative, effective total system (synergism), given the technology available at the time. Today's highly integrated aircraft are uniquely characterized by (1) the extent to which the aircraft disciplines or subsystems are combined, and (2) the use of embedded digital control systems to accomplish the integration. The primary distinction from the past is the flight safety dependence of the integrations.

System integration can be categorized as either functional or subsystem integration. Functional integration occurs when basic aircraft disciplines, such as aerodynamics, structures, or propulsion, are blended through a control system to provide new or improved functions. Examples of functional integrations include staticly unstable airframes requiring full authority control systems, the structural integration providing maneuver-load control and flutter-suppression systems, and

*Aeronautical Engineer, Member AIAA

maneuverability and performance gains expected from integrated propulsion control.

Two aircraft currently in flight test at Ames-Dryden in the functionally integrated category are the X-29 forward-swept wing and the F-15 aircraft being used for the highly integrated digital engine control (HIDEC) program.[2] Figures 1 and 2 show an overview of the X-29 aircraft and its digital flight control system. Figures 3 and 4 give an overview of the HIDEC systems. Primary interactions in the X-29 aircraft are between the aerodynamics (35-percent staticly unstable), the structure, and the flight control system. The HIDEC is investigating interactions between the flight control and propulsion control systems. Reference 3 provides an excellent review of integrated systems aircraft worldwide.

Subsystem integration results from the implementation of the systems that achieve the functional integration. Subsystems include electrical power, actuation and hydraulics, pilot displays, avionics, and, in the case of the military, weapon systems. Full-authority flight control requires the integration of an electrical system to provide full-time, safety-critical power to the control system. Similarly, the flight control system must be interfaced to the actuation system in a manner that is tolerant to faults. These interfaces, or subsystem integrations, are a direct result of the demands placed by the functional integration to control a staticly unstable airframe. Another type of subsystem integration is information fusing or resource sharing. This resulted from the use of digital avionic systems and their data bus architectures. The air data computer can provide data to the flight control system, navigation system, weapon system, and pilot's displays. Raw data and calculated results can be shared by various subsystems.

Integrated systems aircraft can be defined as those that achieve a significant performance gain through functional integration. The functional integrations often use undesirable interactions in a controlled, beneficial manner, making the loss of the control system unacceptable and often unsafe.

Flight experience with the earliest integrated systems aircraft, those with digital flight control systems, has uncovered several unique anomalies that help identify areas where integrated testing capabilities are needed. These anomalies include:

1. Limit-cycle oscillations caused by differences between the iron-bird simulation and the aircraft actuator hysteresis. Inclusion of the actual aircraft systems during ground test would have avoided this flight anomaly.

2. Loss of two out of three digital flight control channels. This was caused by many factors, sensor noise and asynchronous channel operation being primary. The problem was undetected during ground test because of inadequate models of sensor noise and because exact conditions of failure were not in the test matrix.

3. Rudder oscillation with frequency proportionate to engine rpm. The flight control lateral accelerometer detected engine vibrations and fed the control laws. Inclusion of the flight vehicle with the engine operating during ground test would have avoided the flight anomaly.

4. Rapid flight control mode changes caused by an avionics system failure. Problem was not repeatable, and the cause was never found. This serious integration problem (the rapid flight control mode changes caused by the avionics system failure) suggests that improved test efficiency could have avoided the flight anomaly.

5. Unexpected inability to lower landing gear in a remotely piloted vehicle, caused by failure of one of two uplink command receivers. Multiple hardware and software changes, coupled with inefficient failure modes and effects retesting, allowed anomaly.

This partial list of anomalies, along with other flight experience, indicates the need for integrated systems testing. The capabilities described in this paper are currently in various stages of development; all are believed to be needed for successful qualification of integrated systems aircraft.

Integrated Systems Testing

Integrated systems aircraft require integrated systems testing, in addition to the standard individual component testing that is performed on conventionally designed aircraft. Table 1 lists the types of integrated system tests and provides a few examples of component tests for comparison. This section defines integrated system testing, the environments necessitated by it, and how this testing relates to a particular integrated systems application.

One aspect of integrated system testing that makes it unique from other testing is the environment or configuration that is needed. Experience at the Dryden Flight Research Facility has shown that all the interacting systems must be operating together, in an environment that best represents flight, to successfully test an integrated systems aircraft. Required are the embedded digital control system, the airframe, the aircraft subsystems, and the propulsion system. Where aspects of the flight environment or configuration are not possible, detailed simulation models must be included. Typically, the aircraft aerodynamics is a primary model, along with the propulsion system model. Depending on the particular application and such items as the availability of the airframe, other models may also include the actuators, airframe structural modes, maneuvering target aircraft, threats, and perhaps the integrated control algorithms. Figure 5 shows an example of an aircraft in the aerodynamic loop configuration, and Fig. 6, a hot-bench configuration that utilizes the flight electronics hardware only. The hot-bench configuration uses more models than the aircraft-in-the-loop configuration, and the aircraft subsystems, such as the electrical system, are not included. Six cate-

gories of integrated system testing are described in the following sections.

Failure Modes and Effects Testing

Failure modes and effects testing (FMET) assures that the integrated control system design identifies failures and reconfigures the system correctly in response to those failures. Because of the criticality of the system, redundant, fault-tolerant hardware designs are required. Triplex and quad redundancy are used for most digital flight control systems. FMET validates the performance of the fault tolerant design.

Unlike failure modes and effects analysis which examines the system design to determine failure paths leading to loss of control, FMET tests the real hardware operating the flight software. FMET determines the effects of single failures as well as combinations of failures that can lead to loss of control. The fault detection, identification, and reconfiguration of failures have been accomplished within the flight software, making the software an essential part of any failure modes evaluation. In integrated subsystems aircraft, FMET also assures that failures of a subsystem are contained within its allowed boundaries.

FMET is performed by inducing simulated failures in sensors, computer components, communication links, the actuation system, and pilot displays, and then evaluating the effects. Effects are evaluated in terms of the impact on reliability, the proper detection and reconfiguration by the system, and the stability and control performance of the reconfigured system. Depending on the component being failed, several failure modes are examined. Null, hard-over, ramp, and bias failures are typical failure modes exercised for sensor inputs. FMET is usually nondestructive testing, with failure modes being simulated or induced over nominal values.

Stability and Control Testing

Any physical system, whether it be an aircraft, a structure, an engine, or any combination of the three, that has its basic characteristics modified through the use of an active control system, must be tested for adequate stability and control throughout its development. Testing requires a closed-loop configuration to determine proper responses to step inputs, frequency sweeps, and pilot commands. Table 2 lists the typical stability and control tests and the criteria examined for a successful test. The integrated system configuration of this test is performed with the aircraft in the loop so that all the system nonlinearities of flight are present, and to uncover any unexpected interactions that may exist. Test comparisons are made to the stability and control tests which are done during development of systems that use linear models.

Electromagnetic Interference Testing

Electromagnetic Interference (EMI) testing is performed to determine any undesirable effects one subsystem may have on another because of electromagnetic interactions. Because of the amount of electronic equipment and possible modes in which the equipment can operate, the EMI test matrix can grow very large. Testing all the possibilities in an integrated systems aircraft, where a large number of the electronic components are required for safe flight, becomes a difficult task. To date, EMI testing has not been performed with the aerodynamics loop closed around the control system because the flight control system has been a dedicated system without a large number of critical interfaces to other systems. In addition, a considerable amount of testing is performed with the engine operating, making closed-loop operation difficult.

Integrated systems testing for electromagnetic interference will require more effort to complete, to assure that the critical electronic components are compatible for all their operating modes. The capability to perform the tests with the engine running and the aerodynamic loops closed around the control system is needed.

Integration Effects and Sensitivity Testing

Integration effects and sensitivity testing is a unique category for integrated systems aircraft, which concentrates on evaluating the performance effects of the integrated design and what sensitivity the performance may have to changes in various parameters. Each integrated system design is unique therefore, the actual testing and parameters involved will vary. However, when two previously independent systems become reliant on each other, their effects on and sensitivities to each other must be determined. In an integrated flight-fire control system, the stability and control effects that the fire control system has on the flight control system must be evaluated with all systems interacting. The fault-tolerant performance of the overall system must also be evaluated and the sensitivity to different failure modes defined.

An example of a digital flight control sensitivity test is determining the effects of changes in the effectiveness of the control surfaces on stability and control characteristics. This test is done to evaluate the effects of model uncertainties on performance.

Mission Evaluations

Mission evaluation tests are identified by the fact that the pilot is evaluating the integrated aircraft systems' performance. Evaluations are made for flying qualities, displays, and pilot controls. Testing includes both failure-free operation and operation with failures induced. Integrated flight-fire control evaluations may include gross acquisition, tracking, and fragment avoidance after weapon release. An integrated propulsion control system for short takeoff and landing (STOL) would require piloted evaluations of landings and engine-out performance. As the system matures, the mission evaluations are used to assure that flight test points are evaluated on the ground before actual flight testing. This

provides the double service of pilot training, and of detecting any unexpected anomalies that may be latent in the system, surfacing when certain conditions arise.

Mission evaluations are a subset of the previous three tests, performed with a pilot, in the environment that best represents flight.

Revalidation

Throughout the final development and flight test of any control system, changes are made to make improvements and correct discrepancies. Figure 7 shows the discrepancies and corresponding software changes made on one of the Ames-Dryden research aircraft. Any system, whether research, military, or commercial, will eventually be subject to change. Integrated systems aircraft, because of their interactive nature, require careful revalidation of the system for changes made to any of the subsystems. The five tests described previously must be scrutinized to define a sufficient subset of tests that requalify the aircraft.

FMET is frequently rationalized as not needed. It is the most difficult and time-consuming test to perform, and the probability of a failure in a given flight is comparatively low. The criticality of the integrated systems aircraft requires that FMET be a part of the revalidation effort; otherwise, single failures will cause unexpected, perhaps disastrous, results. The inability to lower the gear in the remotely piloted vehicle cited earlier could have been avoided if FMET had been performed after changes were made.

Capabilities to Improve Completeness and Efficiency

Capabilities for complete and efficient testing of integrated systems aircraft are needed to support both initial qualification and flight test operations. Complete testing is required because of the criticality the systems have, and the need to assure safe flight test. Test efficiency is needed to accomplish the increased amount of testing required before flight test and to minimize the downtime for resolving discrepancies discovered during flight test. Completeness and efficiency are closely related. Given a set time frame, test efficiency will allow more testing to occur, improving completeness.

The test matrix (and therefore the number of test conditions) grows exponentially as the number of interdependencies increases. Aircraft stability and control has always been dependent on the aerodynamics, but has now become dependent on the control algorithms, the weapon systems, and the propulsion system characteristics (such as vectored thrust). These new dependencies increase the amount of testing needed. The rationale for complete and efficient testing, along with the desired capabilities to accomplish them, are shown in Table 3. To achieve completeness requires providing capabilities for increased understanding of the system being tested for determining proper test matrices, for increasing the visibility into the system, and for reducing the number of modeling errors through more efficient use of flight equipment. To achieve efficiency requires automating the test process, centralizing the test information, providing for quick test setup, and allowing for easy isolation of interactive systems for troubleshooting.

Test Completeness

Documentation of the flight hardware, the software operating in each flight computer, signal interfaces, and the functional design are all needed to perform integrated systems testing. This documentation is currently only available in hard copy form, often weighing more than one person can carry. The need for an online description of system operation has been shown by such simple examples as word processing software for personal computers which have online help functions. Placing a system description for a control system in a flight computer would not be appropriate, but a system description must be available to the test engineer. Armed with a complete system description, the test engineer can wisely choose test matrices, determine test parameters to monitor, and be in a better position to resolve discrepancies that occur during testing.

The integrated systems aircraft gives the potential of having problems surface in areas that are not being tested directly. Testing a high-current device that loads the electrical bus could affect the operation of any one of the embedded flight computers through EMI. The extensive use of embedded flight computers also means that a majority of the system integration is being done by the software. Instrumentation of the system under test means that one must monitor the different integrated systems, hardware and software, and the aircraft subsystems during test operations. Instrumentation of the software must be considered early in the design to provide access to internal calculations at the rates needed.

Modeling deficiencies can consist of the lack of models for system interactions not believed to be important, as well as uncertainties in models for such things as aerodynamics or the propulsion system. The inability to know and model all the interfaces and interactions that exist between the aircraft subsystems has lead to the inclusion of the aircraft and its flight equipment in the test environment. For example, a control algorithm written in FORTRAN and operating on a mainframe computer would have different characteristics from a flight version. The effect of those differences on system performance is difficult to identify. The easiest solution to the problem is the inclusion of the flight hardware when performing tests. This system "burn-in" is essential for detecting interface problems and achieving maturity in the design.

When qualifying integrated systems aircraft, the model of the operating environment must be

carefully considered to determine its effects on the system. Environmental factors primarily include vibration, temperature, and for piloted simulations, the visual display. Placing an entire aircraft in an environmental chamber capable of thermal cycling and three axis vibration is not feasible; therefore, the effects of these factors must be modeled during testing. Vibration can be modeled by imposing noise on top of sensor values and by testing with the engine operating. Temperature effects must be measured for sensors and actuators and the appropriate sensitivity testing performed. Hot-bench testing allows the flight hardware to be operated within a thermal chamber and the aerodynamic loop closed around the flight control system.

The piloted simulation tasks of mission evaluations require a complete and coordinated set of visual and instrument displays. Integrated systems aircraft are using head-up displays, digital maps, and multifunctional displays as primary pilot instruments. These visual displays, coupled with the out-the-window display, must present a coordinated, realistic flight environment to the pilot. To allow testing with the aircraft in the loop, and to drive the visual displays, requires special considerations during the design of the aircraft.

Test Efficiency

Increasing test efficiency provides the time to perform the complete testing needed to qualify integrated systems for flight test. Test efficiency also reduces flight test cost by minimizing the downtime associated with identifying and resolving discrepancies from flight test. With test costs for digital flight control system qualification running as much as $1 million a month on a given program, improving test efficiency is essential.

Automating the test process is the first step in improving test efficiency. To do this one must first examine the steps performed when conducting a test. They include (1) writing the test procedures, (2) initiating and monitoring the test, (3) analyzing the results for test success, and (4) displaying and documenting the results. Table 4 compares the current manual approach of testing to an automated approach. By putting the simulation and flight systems under control of the automated test system, all the test steps can be interactively controlled by the test engineer. The automated test system requires data base management and analysis software, along with graphical displays and hard copy documentation — all possible with today's engineering work stations. With the automated test system, the number of tests performed and the number of parameters that can be monitored and analyzed is not limited by the time available for testing but by the computational power of the test system.

One obstacle to efficient test operations has been the lack of centralized control and display of test data. Simulation data and operational control have not been available at the aircraft, and only minimal aircraft data were available at the simulation. Control of the aircraft systems was done entirely at the vehicle. A major goal of the automated test development is to rectify the problem by bringing together the aircraft and the simulation operations at one central test station. Synergistic flight vehicles require a synergistic approach to their qualification.

Flight Test Support

In addition to all the above capabilities, two unique capabilities are needed to support the integrated systems aircraft during flight test. Flight test anomalies of this type of aircraft must be thoroughly understood, resolved, and corrected in as short a time as possible to keep flight test cost down. Thoroughly understanding a problem and providing quick turnaround have not been easily accomplished in the past, as the goals tend to be mutually exclusive. Two capabilities will help the situation. First is to allow for quick setup of the aircraft with the simulation so that the conditions of the anomaly can be reproduced quickly. Second is to allow isolation of the interactive subsystems so that the effects of a failing subsystem can be separated from those induced by its interactive partners. In an integrated propulsion-flight control system, this would provide the ability to easily test flight control and propulsion control independently, then combine them for integrated testing. This capability would require that the test system have control over the aircraft systems, and that the necessary aircraft interfaces be provided.

Each of the capabilities discussed have some application to the different integrated systems tests. Depending on the particular integrated systems aircraft design and the specific test, certain capabilities will prove to be more valuable than others. For example, mission evaluations which require piloted simulation cannot be automated to the extent of a stability and control test, in which a specific test is repeated at numerous different flight conditions.

In summary, it is believed that the development of these capabilities will provide for efficient and complete qualification of the integrated systems aircraft flying now and in the future.

Application to Failure Modes and Effects Testing

Failure modes and effects testing for a typical digital flight control system is examined to show how the integrated systems test capabilities can be applied. Several factors must be considered when determining FMET cases for digital control system, including aircraft state, device to be failed, failure mode, and pilot inputs (Table 5). This results in a four-dimensional matrix of possible test combinations, impossible to thoroughly test manually. In designs where the control law characteristics are not decoupled from the fault-detection logic, changes in aircraft state, such as Mach number and altitude, will change control law gains and affect the perfor-

mance of the fault-detection logic. Test matrices of a million test cases are easy to obtain.

Certain capabilities are needed to perform even the basic FMET cases. They include having the real flight equipment under test and having the flight systems thoroughly instrumented. Two of the test capabilities are especially suited to address the problem of the large test matrix: online system description and test automation.

Reducing an FMET test matrix is very difficult because there is always the chance that an unexpected interaction will cause a single failure to develop into something more serious. However, by using an online system description that has been verified as accurate by previous subsystem testing, a test engineer can make intelligent choices when determining the validity of a test case. The online description must allow one to query the design data to determine whether relationships exist between test conditions and subsystems. This has been accomplished to a limited extent on one flight program. Advances in computer science provide several approaches to the online data-base capability; they include relational data-base management systems and artificial intelligence.

The second capability, test automation, shows great promise for handling the test matrices of FMET. The earliest stages of test automation for FMET were during the F-8 digital fly-by-wire program in the midseventies. Sensor redundancy management software in the flight control computers was tested using an automated test pattern that feeds each of the triplex sensors. All aspects of the software were exercised by a 35-second sequence (Fig. 8). Analysis of the results required transferring of data tapes and visual inspection; however, the time needed to qualify the software was greatly reduced. By concentrating the test data and by automating the entire test process from test initiation through analysis and documentation, it is expected that large FMET matrices can be completed in an acceptable time frame.

The Integrated Test Facility

The Integrated Test Facility (ITF, Fig. 9) is a newly proposed facility to be located at Ames-Dryden. The facility would house several existing functions, as well as provide for some new functions necessary to qualify integrated systems aircraft. The ITF brings together the aircraft, simulation systems, and engineering staff, providing a unified test environment. A layout of the facility is shown in Fig. 10. Included is hangar space and aircraft services to support up to six aircraft. Three hangar bays can also be configured to house one larger aircraft. The center section of the building houses the simulation systems, placing them in close proximity to all six hangar test bays. The engineering staff is located in the front of the building, with ample room for visiting contractors who support the flight test programs. The facility would support classified programs.

By providing the ability to operate all the aircraft systems in the test environment, the ITF would provide the capabilities necessary to qualify integrated systems aircraft.

Concluding Remarks

Flight test experience with early integrated systems aircraft has shown the difficulty and cost of qualifying and flight testing this new class of aircraft. New capabilities must be developed to qualify the integrated systems aircraft to avoid delayed developments and increased risk during flight test. The Integrated Test Facility and test capabilities described herein are being developed to assure continued progress in the flight test of aeronautic programs.

REFERENCES

1. Schweikhard, William G., and Berry, Donald T., "Cooperative Airframe/Propulsion Control for Supersonic Cruise Aircraft," SAE Paper 740478, May 1974.

2. Burcham, Frank W., Jr., and Haering, Edward A., Jr., "Highly Integrated Digital Engine Control System on an F-15 Airplane," AIAA Paper 84-1259, June 1984.

3. Rediess, H.A., and Buckley, E.C., "Technology Review of Flight Crucial Flight Control Systems," NASA CR-172332, 1984.

Table 1 Integrated system and component tests

- Integrated systems tests
  - Failure modes and effects
  - Stability and control
  - Electromagnetic interference
  - Integration effects and sensitivity
  - Mission evaluation
  - Revalidation
- Component tests
  - Hardware tests
    - Temperature
    - Vibration
    - Humidity
    - Hysteresis (actuators)
    - Noise (sensors)
  - Software tests
    - Code examination
    - Unit tests
    - Total product testing
  - Hardware and software interface testing

Table 2 Stability and control tests and criteria

Test	Type	Criteria
Step response	Time domain	Frequency and damping of response
Frequency response, closed loop	Frequency domain	Gain margins, phase margins
Frequency response, open loop	Frequency domain	Comparison of flight code to development models
Static gains	Time domain	Comparison of sensor to surface gains to development models

Table 3 Capabilities needed for complete, efficient testing

Completeness	Efficiency
Rationale –	Rationale –
Criticality of systems, safety	Increasing size of test matrix needed to qualify system
Minimize flight test anomalies	Minimize downtime during flight
Capabilities –	Capabilities –
Online system description for a thorough understanding of system under test and determining proper test matrices	Automation of the test process Performing test cases Analysis of Results Documentation
Instrumentation of systems under test to see detailed response to stimulus	Centralized control and display of test data
Inclusion of real equipment to minimize modeling errors	Quick setup of aircraft systems for analysis
Providing detailed models of the systems' operating environment.	Isolation of individual interrelated systems for troubleshooting.

Table 4 Comparisons of current manual test approach to an automated approach

Test phase	Current approach	Automated approach
Develop test procedures	Write verification and validation tests Identify test configuration Identify test parameters (recorded on paper)	Write test reports Identify test configuration Identify test parameters (stored in computer)
Test setup and execution	Manually change configuration Physically perform test procedures	Execute procedures electronically
Monitor test results	Monitor strip charts, lights, and simulation displays Information physically distributed	Central monitoring of all predetermined data Flexible formats, graphics displays
Analyze test results	Analyze strip charts and listings after testing	Near real-time analysis of test data
Create documentation	Assemble test forms, copy strip charts, attach listings, explain results	All pertinent data maintained by data base

Table 5 Factors in defining an FMET matrix

Aircraft states, including
Mach number
Altitude
Inertial rates
Landing gear position
Weight on wheels
Devices, including
Electrical power
Interial sensor
Rate gyro
Analog/digital converter
Memory
Actuator command link
Display
Failure modes, including
Random noise
Hard over
Ramp
Oscillatory
Null
Pilot inputs, including
Pitch stick
Trim
Mode selection

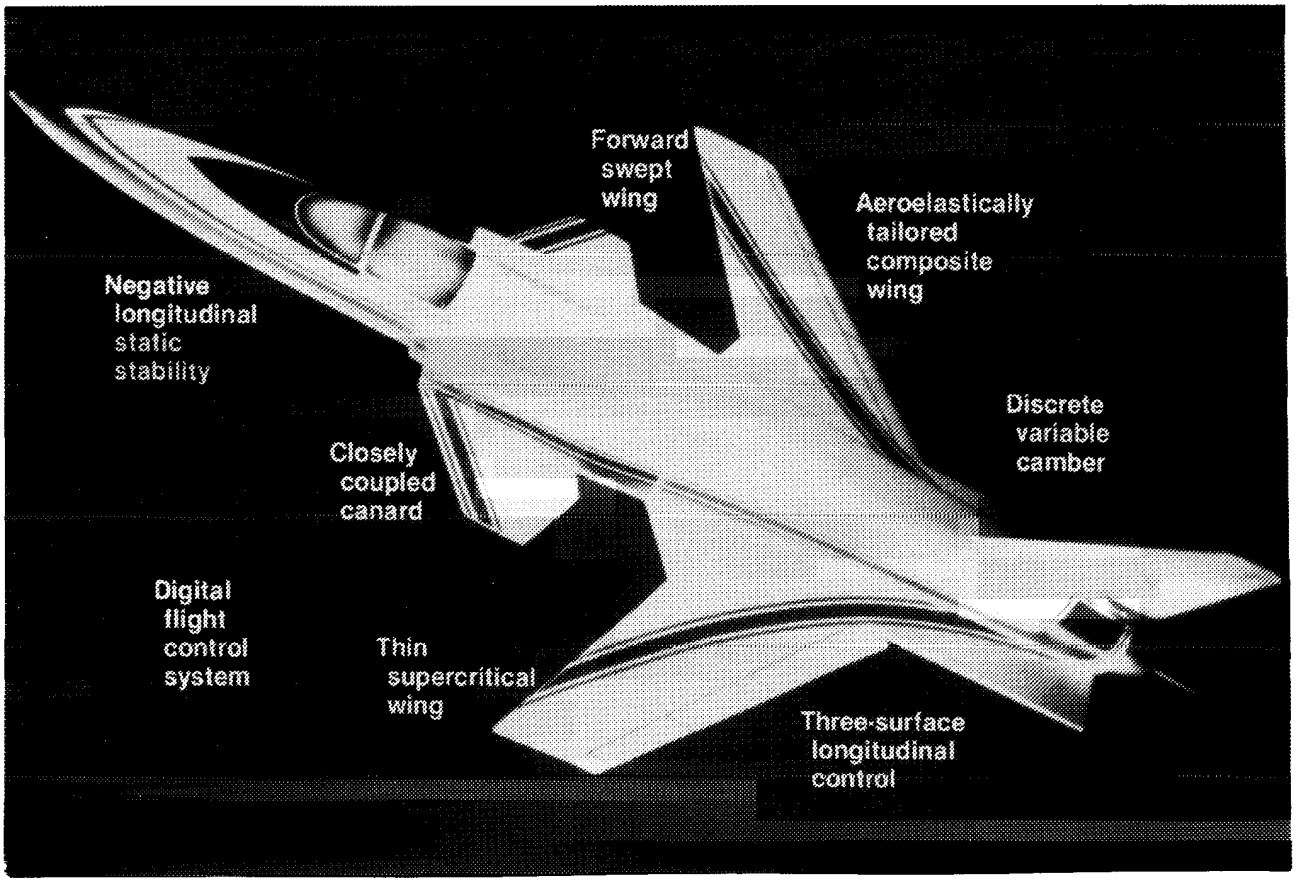

Fig. 1 Overview of X-29 technologies.

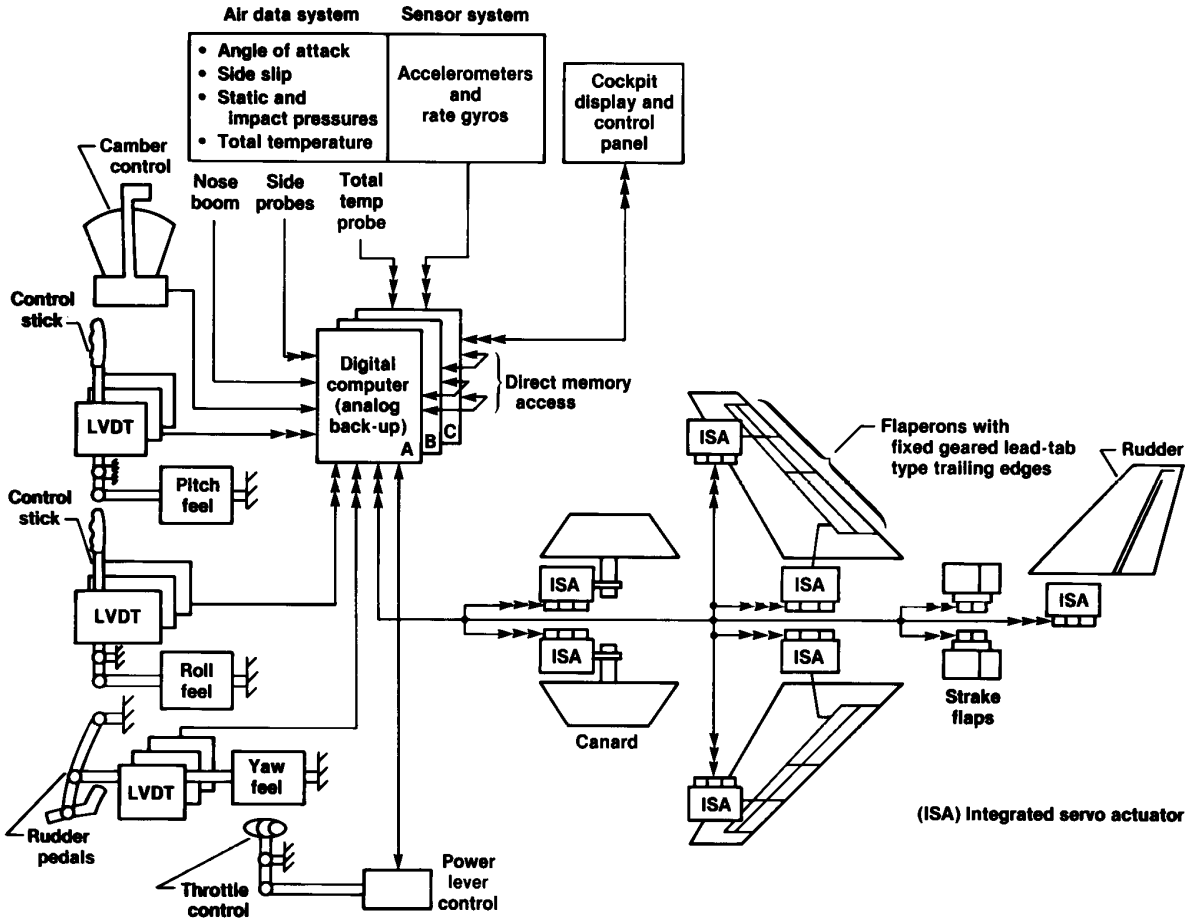

Fig. 2 X-29 flight control system.

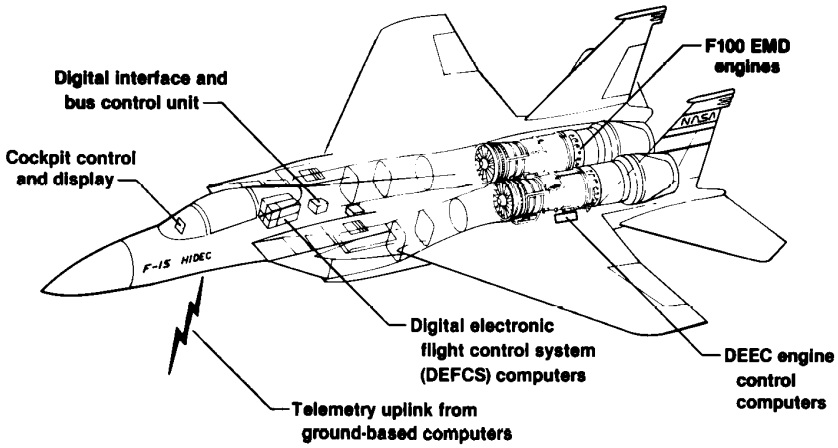

Fig. 3 Features of the F-15 HIDEC research airplane.

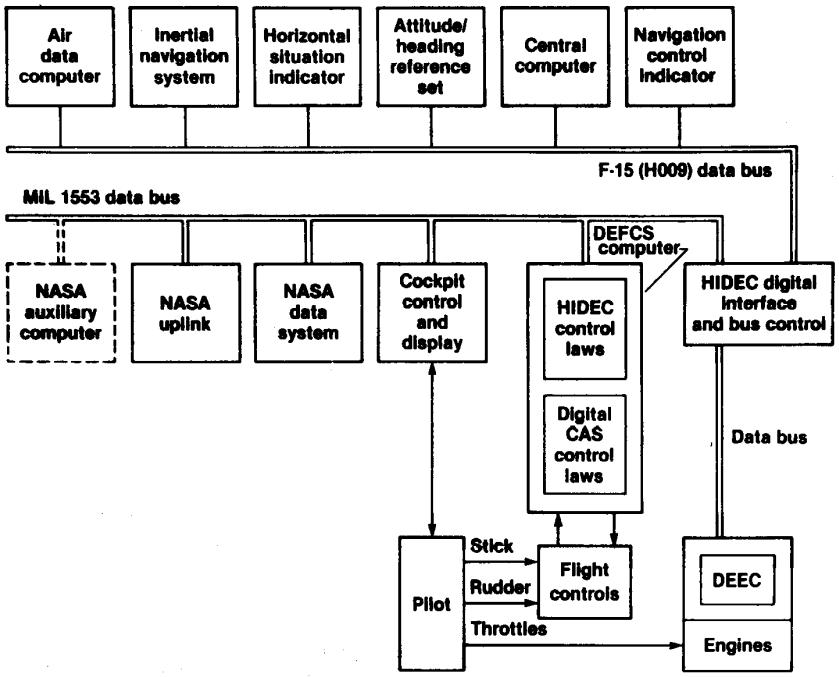

Fig. 4 Block diagram of the HIDEC system.

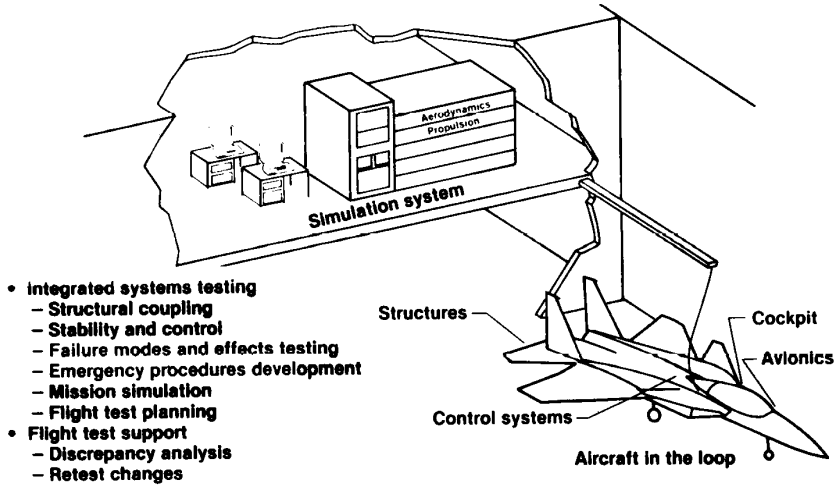

Fig. 5 Aircraft-in-the-loop configuration.

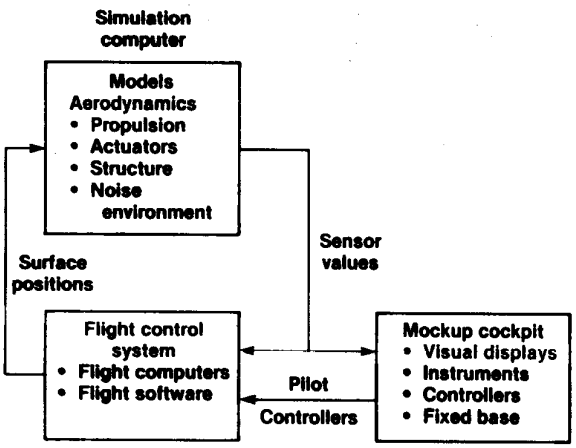

Fig. 6 Hot-bench simulation.

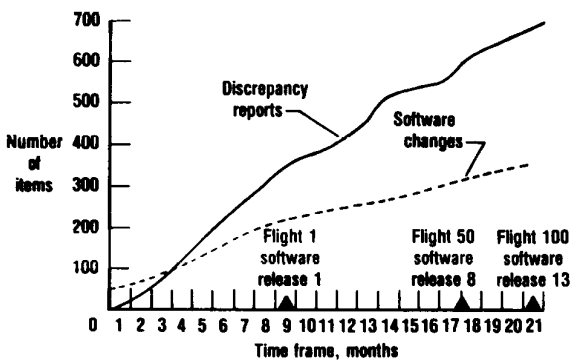

Fig. 7 History of discrepancies and changes for an integrated systems aircraft.

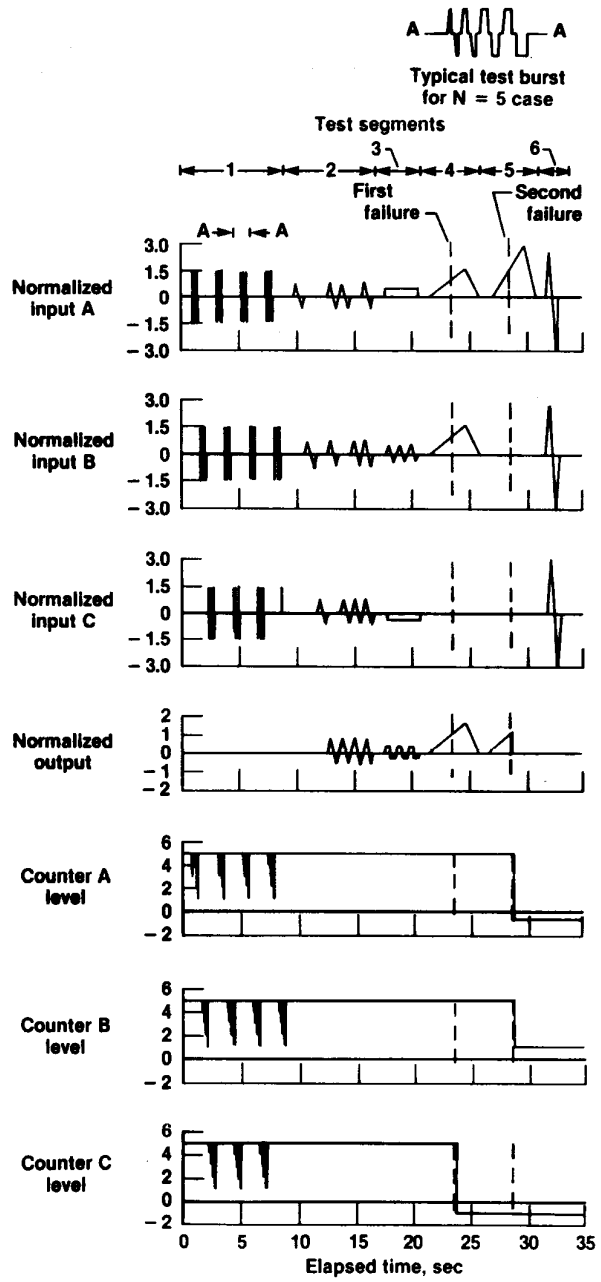

Fig. 8 Automated test sequence for sensor inputs.

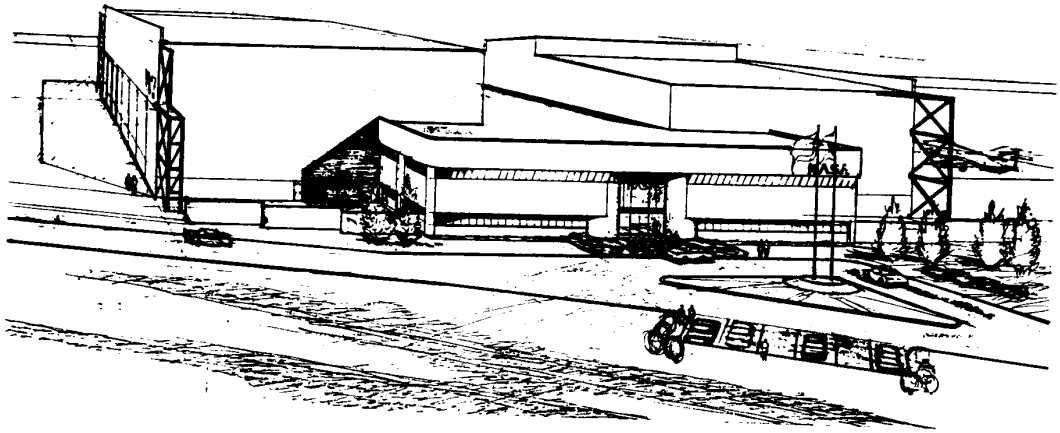

Fig. 9 The Integrated Test Facility.

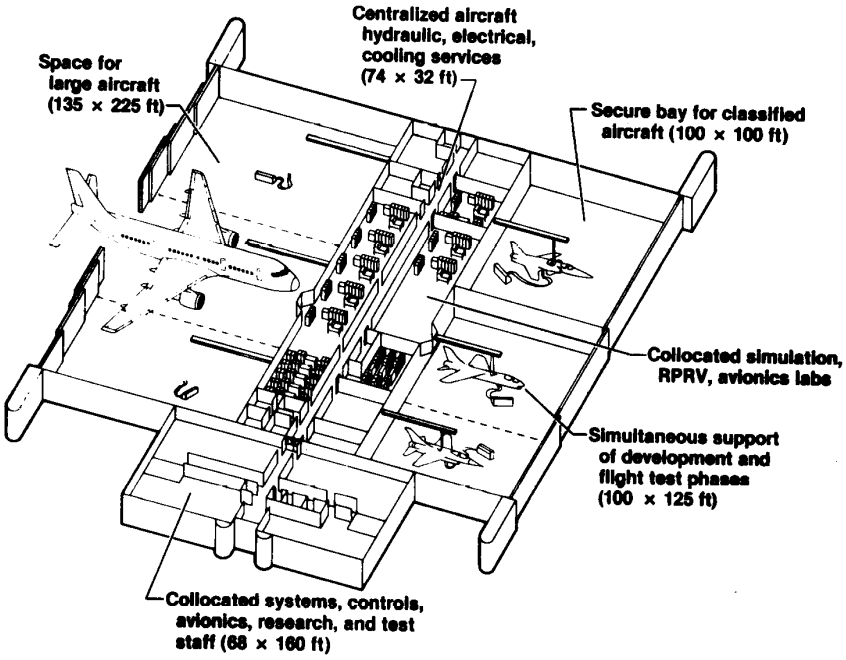

Fig. 10 Integrated Test Facility layout.

1. Report No.	2. Government Accession No.	3. Recipient's Catalog No.
NASA TM-86731		

4. Title and Subtitle	5. Report Date
QUALIFICATION NEEDS FOR ADVANCED INTEGRATED AIRCRAFT	July 1985
	6. Performing Organization Code
7. Author(s)	8. Performing Organization Report No.
Dale A. Mackall	H-1291
	10. Work Unit No.
9. Performing Organization Name and Address	
NASA Ames Research Center Dryden Flight Research Facility P.O. Box 273 Edwards, CA 93523	11. Contract or Grant No.
	13. Type of Report and Period Covered
12. Sponsoring Agency Name and Address	Technical Memorandum
National Aeronautics and Space Administration Washington, D.C. 20546	14. Sponsoring Agency Code
	RTOP 533-02-61

15. Supplementary Notes

Prepared for presentation at American Institute of Aeronautics and Astronautics Conference, Snowmass, Colorado, August 19-21, 1985.

16. Abstract

In an effort to achieve maximum aircraft performance, designers are integrating aircraft systems. The characteristics of aerodynamics, vehicle structure, and propulsion systems are being integrated and controlled through embedded, often flight-critical, electronic systems. This paper addresses the qualification needs for such highly integrated aircraft systems. Based on flight experience with research aircraft, a set of test capabilities is described which allows for complete and efficient qualification of advanced integrated aircraft.

17. Key Words (Suggested by Author(s))	18. Distribution Statement
Integrated aircraft Integrated systems test Revalidation Automation Integrated test laboratory	Unclassified — Unlimited STAR category 05

19. Security Classif. (of this report)	20. Security Classif. (of this page)	21. No. of Pages	22. Price*
Unclassified	Unclassified	14	A02

For sale by the National Technical Information Service, Springfield, Virginia 22161.