NASA Technical Memorandum 86745

Augmentor Performance of an F100 Engine Model Derivative Engine in an F-15 Airplane

James T. Walton and Frank W. Burcham, Jr.

May 1986

R EARLY DOMESTIC DISS

Because of its significant early commercial pote al, information, which has been developed r a U.S. vernment program, is being di inated within United States in adv of general publication. information duplicated and used by the recipi ith press limitation that it not be published. Release of this information to other domestic parties by the recipient shall be made subject to these li ions.

Foreign release may be made only with NASA approval and appropriate export licenses. This nd shall be marked on any reproduction of this in ation in whole or in

general release May 20, 1988

National Aeronautics and
Space Administration

NASA Technical Memorandum 86745

Augmentor Performance of an F100 Engine Model Derivative Engine in an F-15 Airplane

James T. Walton and Frank W. Burcham, Jr.
Ames Research Center, Dryden Flight Research Facility, Edwards, California

1986

National Aeronautics and
Space Administration
Ames Research Center
Dryden Flight Research Facility
Edwards, California 93523-5000

SUMMARY

The transient performance of the F100 engine model derivative (EMD) augmentor was evaluated in an F-15 airplane. The augmentor was a newly designed 16-segment augmentor. It was tested with a segment-1 sprayring with 90° fuel injection, and later with a modified segment-1 sprayring with centerline fuel injection. With the 90° fuel injection, no-lights occurred at high altitudes with airspeeds of 175 knots or less; however, the results were better than when using the standard F100-PW-100 engine. With the centerline fuel injection, all transients were successful to an altitude of 15,500 m and an airspeed of 150 knots: no failures to light, blowouts, or stalls occurred. For a first flight evaluation, the augmentor transient performance was excellent.

INTRODUCTION

The performance of the augmentor of an engine is important for a high-performance airplane. The augmentor must have good transient capability, including the ability to light reliably and rapidly over the flight envelope. The F100 engine that powers the F-15 and F-16 airplanes has a five-segment augmentor that has experienced operational problems in the high-altitude, low-airspeed flight regime, including stalls, blowouts, rumble, and failure to light ("no-light"). The addition of a digital electronic engine control (DEEC) improved the augmentor operation significantly (ref. 1). However, inherent features of the F100 augmentor design limit its capability.

As part of the USAF-sponsored F100 engine model derivative (EMD) program (ref. 2), the engine manufacturer developed a modified augmentor, consisting of 16 segments. As part of a flight evaluation of the F100 EMD in an F-15 airplane at the Dryden Flight Research Facility of the NASA Ames Research Center (ref. 3), the transient performance of the augmentor was investigated. This report describes the F100 EMD augmentor, the control logic, and the preliminary flight results.

NOMENCLATURE

AB	afterburner
AJ	exhaust nozzle area, m^2
BPRC	calculated bypass ratio
BUC	hydromechanical backup control
CIVV	compressor inlet variable vanes
CENC	convergent exhaust nozzle control
DEEC	digital electronic engine control

EMD	engine model derivative
EPR	engine pressure ratio, PT6M/PT2
FA-AB	fuel-to-air ratio of the augmentor
FTIT	fan turbine inlet temperature
HP	pressure altitude, m
LOD	light-off detector
M	Mach number
N1	fan rotor speed, rpm
N2	core rotor speed, rpm
PAB	augmentor static pressure, kN/m^2
PB	burner pressure, kN/m^2
PCM	pulse code modulation
PLA	power lever angle, deg
PLA-AB	power lever angle in afterburning range, deg
PN1C	fan rotor speed required for augmentor permission, percent
PS2	fan inlet static pressure, kN/m^2
PT2	fan inlet total pressure, kN/m^2
PT2C	PT2 calculated by the DEEC
PT6M	mixed turbine discharge total pressure (core and fan), kN/m^2
RCVV	rear compressor variable vanes
SVP	segment selector valve position, deg
t	time, sec
TT2	engine inlet total temperature
ULHC	upper left-hand corner
VC	calibrated airspeed, knots
WF	fuel flow

WFAB fuel flow to augmentor

WFGG fuel flow to engine gas generator

DESCRIPTION OF APPARATUS

Airplane

The F-15 airplane (fig. 1) is a high-performance, twin-engine fighter, capable of speeds to Mach 2.5. The engine inlets are the two-dimensional external compression type with three ramps, and feature variable capture area. The F-15 airplane is powered by two F100 afterburning turbofan engines located in the aft fuselage.

Engine Description

The F100 engine is a low-bypass-ratio (0.6), twin-spool, afterburning turbofan. The three-stage fan is driven by a two-stage, low-pressure turbine. The 10-stage, high-pressure compressor is driven by a two-stage high-pressure turbine. The engine incorporates compressor inlet variable vanes (CIVV) and rear compressor variable vanes (RCVV) to achieve high performance over a wide range of power settings; a compressor bleed is used only for starting. Continuously variable thrust augmentation is provided by a mixed-flow augmentor which is exhausted through a variable-area convergent-divergent nozzle.

The F100 EMD engines (fig. 2) are modified from the standard F100-PW-100 engine by features shown in figure 3. A redesigned fan operates at a 5-percent higher airflow and a 7-percent higher pressure ratio. The compressor is slightly modified by changing the angle of some of the stators. A modified combustor with a recontoured aft end is used to permit operation at higher combustor exit temperatures. The high-pressure turbine incorporates single crystal blades and vanes to operate at a 21°C higher fan turbine inlet temperature, FTIT. The five-segment augmentor of the F100 is replaced by a 16-segment augmentor in the F100 EMD engine. Dual augmentor ignitors and an ultraviolet sensing light-off detector, LOD, are provided. The same exhaust nozzle is used. The F100 EMD is equipped with an engine-mounted DEEC and a noseboom static pressure (PS2) probe on the hub of the engine. With these modifications, the F100 EMD engine is rated in the 110,000 N (28,000 lb) thrust class, with an 8.2 thrust-to-weight ratio.

The F100 EMD prototype engines used for the flight evaluation were serial numbers P680350 and P680585. The tests were conducted during 1983 and 1985.

Augmentor. — The augmentor sprayring configuration of the F100 EMD engines is shown in figure 4. There are nine sprayrings divided into 16 discrete segments. Segments 1 to 14 are 180° segments, while segments 15 and 16 are full 360° segments. Fixed orifice sprayrings are used for all segments. Because the segment volumes are relatively small, the "quickfill" feature of the five-segment F100-PW-100 augmentor is not required, and the design produces smaller pressure pulses during segment sequencing. The standard F100 removable flameholder and a zero-aspiration augmentor liner were used.

Two different segment-1 sprayring configurations were tested (fig. 5). The original design, shown in figure 5(a), injected the fuel at a 90° angle into the pilot section of the flameholder. This system was later modified to the centerline injection shown in figure 5(b), to provide a more uniform fuel distribution across the flight envelope.

Augmentor fuel distribution. — The augmentor fuel distribution for the F100 EMD is handled by the augmentor fuel control. The hydromechanical metering and distribution unit is shown in figure 6. The primary control variables are the segment selector valve and the rotating fuel metering valve. The segment selector valve translates supply fuel to segments 1 to 16. The fuel metering valve rotates to vary the volume of fuel delivered to each segment. These are positioned by the DEEC according to logic discussed below. Important to note in figure 6 are the individual mechanical pressure regulating valves which provide the correct pressure to each segment.

DEEC. — The DEEC is a full-authority, engine-mounted, fuel-cooled digital electronic control system that performs the functions of the standard F100 engine hydromechanical unified fuel control and the supervisory digital engine electronic control. The DEEC consists of a single-channel digital controller with selective input-output redundancy, and a simple hydromechanical backup engine control (BUC). The DEEC system is functionally illustrated in figure 7. It receives inputs from the airframe through throttle position (PLA) and Mach number (M), and from the engine through pressure sensors (PS2, PB, and PT6M), temperature sensors (TT2 and FTIT), rotor speed sensors (N1 and N2), and an augmentor flame sensor (LOD). It also receives feedbacks from the controlled variables through position feedback transducers, indicating variable vane (CIVV and RCVV) positions, metering valve positions for gas-generator fuel flow (WFGG), augmentor fuel flow (WFAB), segment selector valve position (SVP), and exhaust nozzle position (AJ).

The input information is processed by the DEEC computer to schedule the variable vanes (CIVV and RCVV), to position the compressor start bleeds, to control gas-generator and augmentor fuel flows, to position the augmentor segment-selector valve, and to control exhaust nozzle area.

DEEC logic. — The DEEC logic provides open-loop scheduling of CIVV, RCVV, start bleed position, and augmentor controls. The DEEC incorporates closed-loop control logic to eliminate the need for periodic trimming and to improve performance. The two main closed loops are shown in figure 8. The top part of the figure shows the total airflow logic in which gas-generator fuel flow (WFGG) is controlled to maintain the scheduled fan speed, and hence, airflow. Proportional-plus-integral control is used to match the N1 request to the sensed N1. Limits of N2, FTIT, and PB are maintained. The airflow loop is used for all throttle settings.

Shown in the lower part of figure 8 is the engine pressure ratio (EPR) loop. The requested EPR is compared with the EPR, based on PT2 and PT6M, and, using proportional-plus-integral control, the nozzle is modulated to achieve the requested EPR. The EPR control loop is only active for intermediate power operation and augmentation. At lower power settings, a scheduled nozzle area is used. During augmentor sequencing, the nozzle base area is scheduled as a function of augmentor segment, as indicated by power lever angle in afterburning range (PLA-AB). Therefore, during augmentor operation, the AJ will be the base area trimmed as required to maintain EPR.

The LOD is used by the DEEC to provide an indication of flame in the augmentor. The ultraviolet sensor provides a signal proportional to flame intensity. It also incorporates an ultraviolet light source that is used to self-test the LOD.

Augmentor logic. — To obtain desirable augmentor performance, control of fuel flow and segment sequencing is varied according to flight conditions (fig. 9). Fuel flow and segment sequencing are controlled by way of the augmentor metering valve and segment selector valve, respectively.

Augmentor fuel flow is controlled by a fuel metering valve. For the flight tests, the engines were equipped with a single flow metering valve for all 16 segments; later EMD engines may be equipped with separate core and duct metering valves for better fuel distribution. The single fuel metering valve is controlled by the DEEC by logic illustrated in figure 9(a). The basic fuel-air ratio schedule is a function of PLA-AB, PT6M, PT2C, and BPRC. This fuel-air ratio (FA-AB) is multiplied by the DEEC-calculated total airflow to obtain the augmentor fuel flow, WFAB. The fuel flow is modified by an ignition bias in segment 1, a rumble bias in the upper left-hand corner (ULHC), and a durability bias at high airspeeds that would reduce the outer segment (16) fuel flow.

The sequencing logic is shown in figure 9(b). Augmentor permission is based on PLA, burner pressure (PB), and percent fan rotor speed (PN1C), as shown. The PB must exceed a minimum pressure for augmentor permission; at PB values below the limit, the probability of a successful augmentor light is reduced. At low values of PT2C, the minimum PN1C for permission is increased inversely to PT2C. This increases pressure and temperature with a higher probability of a successful light-off.

The rate of change of the position of the segment selector valve is controlled by the augmentor rate limiting logic. It is a function of PT2C. At lower values of PT2C, the time required between segments is increased to allow the EPR control loop to maintain the desired EPR more closely.

The segment selection logic has several functions. The segment sequencing is a function of PT2C and LOD, and time (t). This logic holds the augmentor sequencing in segment 1 until a stable flame has been detected by the LOD. In addition, as PT2C decreases, the maximum number of segments permissable is decreased. The number of segments is determined by functions of PT6M and the calculated bypass ratio (BPRC) for rumble and liner durability protection. Figure 10 shows the maximum number of segments allowable over the flight envelope. In the ULHC, the number of segments is limited to 10 by rumble considerations.

The segment selection logic may also automatically recycle the PLA-AB in case of an augmentor blowout or no-light (failure to light). If the LOD has not detected a light within a prescribed amount of time, or if a blowout is detected, the PLA-AB is returned to intermediate, and the ignition cycle is reinitiated. Up to three recycle attempts are allowed. Following a detected blowout or no-light, an LOD self-test is accomplished before the recycle attempt. If the LOD has failed, the logic can also use a modified augmentor lighting and sequencing procedure.

Instrumentation

Instrumentation used to evaluate the augmentor performance is shown in figure 11. Significant pressure parameters include segment pressures, augmentor static pressure (PAB), and PS2. Monitoring of segment pressures is conducted by measuring six of the 16 fuel segments with close-coupled pressure transducers. Measurement of PAB utilizes a high-response pressure transducer. PS2 is measured by a PS2 probe mounted on the inlet hub. Additionally, the nozzle area (AJ) is monitored as a function of the nozzle actuator position, which is controlled by the DEEC. Additional information received from the DEEC includes segment and metering valve position, N1, N2, FTIT, PT2C, and the output of the LOD.

TESTS AND PROCEDURES

Evaluation of the F100 EMD augmentor was conducted during 12 flights. The highest priority was given to investigation of the upper left-hand corner (ULHC), where augmentor operation is more difficult. From the 12 test flights, augmentor performance data were gathered through 158 transients at altitudes up to 15,550 m and a minimum airspeed of 110 knots. The maximum Mach number tested was 2.0.

Augmentor transient performance was evaluated with rapid throttle transients. Each transient consisted of a rapid single-direction throttle movement (snap) by the pilot from one stabilized PLA to another. To maintain the test flight conditions, the pilot stabilized speed by controlling the right engine while the left engine was evaluated. Two types of augmentor throttle transients were conducted as representative of standard flight condition extremes. The first type was an idle-to-maximum-to-idle throttle snap sequence, while the second type was an intermediate-to-maximum-to-intermediate sequence. During the sequence, the engine was held at one power setting until stabilized. Each transient was repeated until the same result was achieved in two out of three trials. Augmentor transients that required recycles were considered successful, but were noted.

The data from the augmentor instrumentation during the tests were recorded on a pulse code modulation (PCM) system. The digital PCM data were recorded by an onboard tape recorder, while also being telemetered to the ground for real-time display in the control room.

RESULTS AND DISCUSSION

Performance of the F100 EMD augmentor is first shown at the high and medium airspeeds where good augmentor operation is easy to achieve. Then, examples at lower airspeeds are shown.

High Airspeed

A time history of an intermediate-to-maximum power throttle transient is shown in figure 12, at an airspeed of 550 knots and an altitude of 3600 m. The pilot

advanced the throttle to maximum at t = 0.6 sec. Since the engine was already at intermediate power, the DEEC logic requested segment-1 initiation, and turned on the augmentor ignitors. The ignitor sparks caused a very low-level indication in the output of the LOD. The segment-1 pressure rise was delayed approximately 0.5 sec because of the time required to start the augmentor fuel pump and to fill the segment-1 sprayring. The LOD indicated a light at t = 1.2 sec, as soon as the segment-1 pressure began to rise. Because the segment-1 fuel flow was small, no significant perturbation was seen in the augmentor static pressure, PAB. The nozzle area, AJ, increased slightly to maintain EPR. After a 0.5-sec hold in segment 1, the DEEC released the segment sequencing, and segments 2 to 16 were turned on. The segment pressures shown in figure 12 (1, 2, 10, 11, 15, and 16) have differing levels because of the different settings of the segment-regulating valves (fig. 6). The AJ increased smoothly and the LOD remained at a high level, indicating a good quality flame. The PAB showed a slight dip at t = 2.0 sec, with a drop from 260 to 245 kN/m^2 (or 6 percent), and stayed within the 6-percent range for the rest of the transient. At t = 4.8 sec, the transient was complete, for a transient time of 4.2 sec. At t = 5.5 sec, segment 16 was turned off by the durability logic (shown in fig. 9(b)) because of the high levels of pressure and temperature as airplane speed increased.

Figure 13 shows an idle-to-maximum power throttle transient for the same flight conditions. The transient began at t = 0.8 sec with the throttle snap, and was followed closely at t = 1.0 sec with segment selection request for segment 1 and ignitor startup. By t = 1.4 sec, the segment-1 pressure rise began. As shown, N1 was not required to spool up before augmentor permission because of the high total pressure (PT2) at these flight conditions (fig. 10). This kept the time delay between segment request and pressure rise at only 0.4 sec. The LOD clearly indicated the augmentor light at t = 1.8 sec. Segment-2 permission was delayed by the logic until the fan speed approached its final value. Final segment stabilization occurred by t = 5.0 sec, for a transient time of 4.4 sec — just slightly longer than for the intermediate-to-maximum transient shown in figure 10.

Moderate Airspeed

A moderate airspeed throttle transient time history is shown in figure 14, at calibrated airspeed (VC) = 310 knots and an altitude of 10,700 m. The transient began at t = 1.5 sec with an intermediate-to-maximum throttle snap. This was followed in 0.2 sec by a segment selection request and ignitor startup. Segment-1 pressure rise began at t = 1.9 sec, exhibiting a rapid rise, but did not result in a pressure spike in PAB. The segment sequencing was significantly slower at this flight condition, and the nozzle response to each segment is evident. At this flight condition, only 15 segments were used because of rumble considerations (fig. 10). The transient was essentially complete at t = 8.0 sec. At t = 8.6 sec, the pilot returned the throttle to intermediate power, the augmentor segments shut off rapidly, and the nozzle closed rapidly. By t = 9.8 sec the augmentor was shut off.

The F100 EMD augmentor operated successfully at high and moderate airspeeds. No blowouts, failures-to-light, or stalls occurred as a result of pressure spikes during sequencing. At VC = 250 knots and above, no PLA recycles occurred.

Low Airspeed

At low airspeeds (below VC = 250 knots), operation of the augmentor becomes more difficult. Pressures and temperatures are low and total airflow is low. The augmentor fuel flows are low, making good fuel distribution more difficult to achieve. Tests were made with both the 90° injection segment-1 sprayring, and later with the centerline injection sprayring.

An example of an idle-to-maximum power throttle transient at an altitude of 12,200 m and VC = 125 knots is shown in figure 15. Figure 15(a) shows results with the 90° injection segment-1 sprayring. At t = 0.3 sec, the throttle was advanced to maximum power. At this flight condition, augmentor permission was delayed until the fan speed approached its final value. At t = 6.1 sec, the fan reached speed and augmentor permission was achieved. The ignitor sparks are seen in the LOD signal, with segment-1 fuel flow beginning at t = 6.1 sec. However, no-light occurred. After 2.5 sec, the DEEC declared a "no-light," and began a recycle. The segment-1 fuel flow was terminated, the LOD was tested, and a new attempt to light was begun at t = 10.9 sec. This was also unsuccessful, and another recycle was initiated. The third recycle began at t = 20.5 sec. Just before the end of the 2.5-sec period allowed for a light, the LOD finally showed an indication of a light. Segments 2 to 10 were successfully lighted; however, the throttle transient required more than 30 sec to complete.

The same idle-to-maximum throttle transient was repeated on a later flight with the centerline injection for the segment-1 sprayring; the results are shown in figure 15(b). The transient began at t = 0.2 sec, and as before, augmentor permission was delayed until t = 5.0 sec. The LOD shows that a light occurred as soon as segment-1 fuel flow was initiated. The LOD remained at a high level during the segment sequencing. The PAB trace shows that pressure pulses were small, with a maximum value of 4 kN/m^2, or less than 6 percent.

Summary of Augmentor Transients

Success of the augmentor transients with the 16-segment augmentor is shown in figures 16 and 17. Figure 16 summarizes the transients conducted with the 90° injection segment-1 sprayring. The intermediate-to-maximum transients are shown in figure 16(a). All transients at pressure altitude (HP) = 12,200 m and below were successful. At higher altitudes, there were no-lights and PLA recycles required at the lower airspeeds. The PLA recycles were required because of no-lights; once the light occurred, the transient was always successful. No stalls occurred. The test results for the standard F100-PW-100 engine are also shown, and are not as good as those for the F100 EMD tests.

Figure 16(b) shows idle-to-maximum success for the same configuration. All tests were successful at airspeeds of 200 knots and above. At lower airspeeds, PLA recycles were experienced, and no-lights occurred at altitudes of 13,700 m and above. The PLA recycles were required because of no-lights; once the light occurred, as in figure 15(a), all transients were successfully completed. No stalls or blowouts occurred. The success boundary of the F100-PW-100 is again shown, and is not as good as the F100 EMD.

Figure 17 shows the augmentor transient success for the centerline injection segment-1 sprayring. Both intermediate-to-maximum transients (fig. 17(a)), and idle-to-maximum transients (fig. 17(b)) were successful. No PLA recycles were required, and no stalls or blowouts occurred. In addition, numerous transients were successfully conducted at lower altitudes and airspeeds, such as 6000 m and 110 knots. Clearly the centerline sprayring solved the problems of earlier tests with the 90° injection segment-1 sprayring. Overall transient performance of the modified 16-segment augmentor was excellent.

CONCLUSIONS

An F100 EMD engine, which incorporates a newly designed 16-segment augmentor, was evaluated in flight in an F-15 airplane. The first configuration tested incorporated 90° fuel injection for the segment-1 sprayring. This configuration was better than the standard F100-PW-100 augmentor, but did experience no-lights at airspeeds of 175 knots and below. No stalls or blowouts occurred. A modified segment-1 sprayring using centerline fuel injection was also tested, and was successful at all tested flight conditions, including altitudes to 15,500 m and airspeeds down to 125 knots. The first flight evaluation of the 16-segment augmentor was very successful.

National Aeronautics and Space Administration
Ames Research Center
Dryden Flight Research Facility
Edwards, California, July 3, 1985

REFERENCES

1. Burcham, Frank W., Jr.; and Pai, G. David: Augmentor Transient Capability of an F100 Engine Equipped With a Digital Electronic Engine Control. Digital Electronic Engine Control (DEEC) Flight Evaluation in an F-15 Airplane, NASA CP-2298, 1983, pp. 171-199.

2. Edmunds, D.B.; and McAnally, W.J., III: Lessons Learned Developing a Derivative Engine Under Current Air Force Procedures. AIAA 84-1338, June 1984.

3. Myers, Lawrence P.; and Burcham, Frank W., Jr.: Preliminary Flight Test Results of the F100 EMD Engine in an F-15 Airplane. NASA TM-85902, 1984.

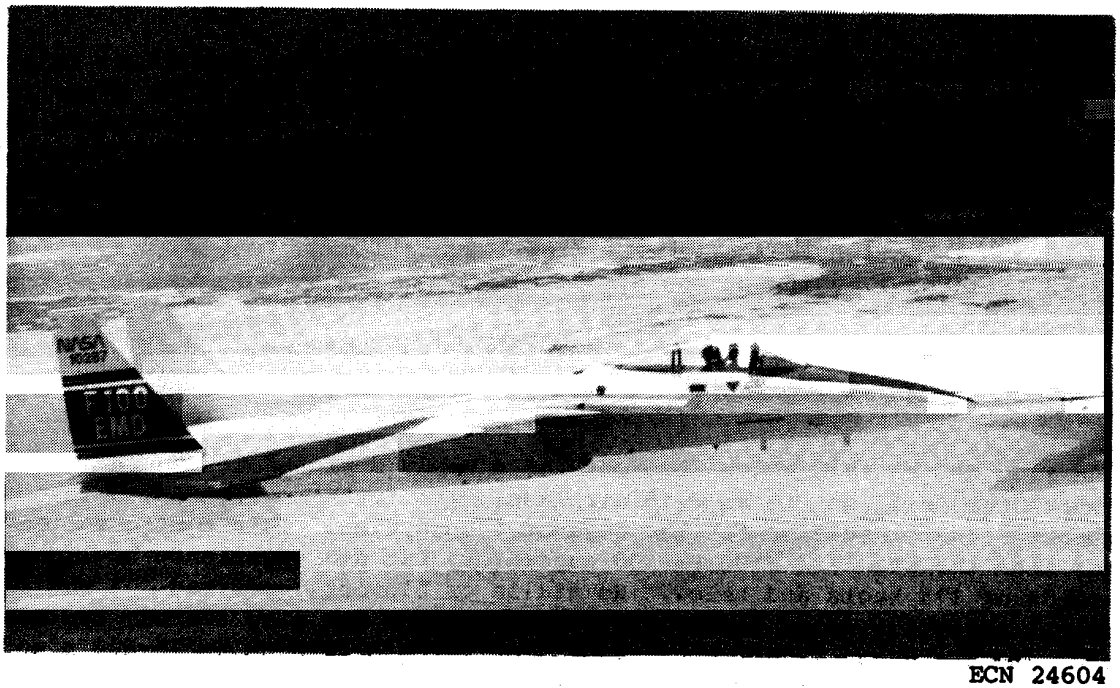

ECN 24604

Figure 1. F-15 airplane.

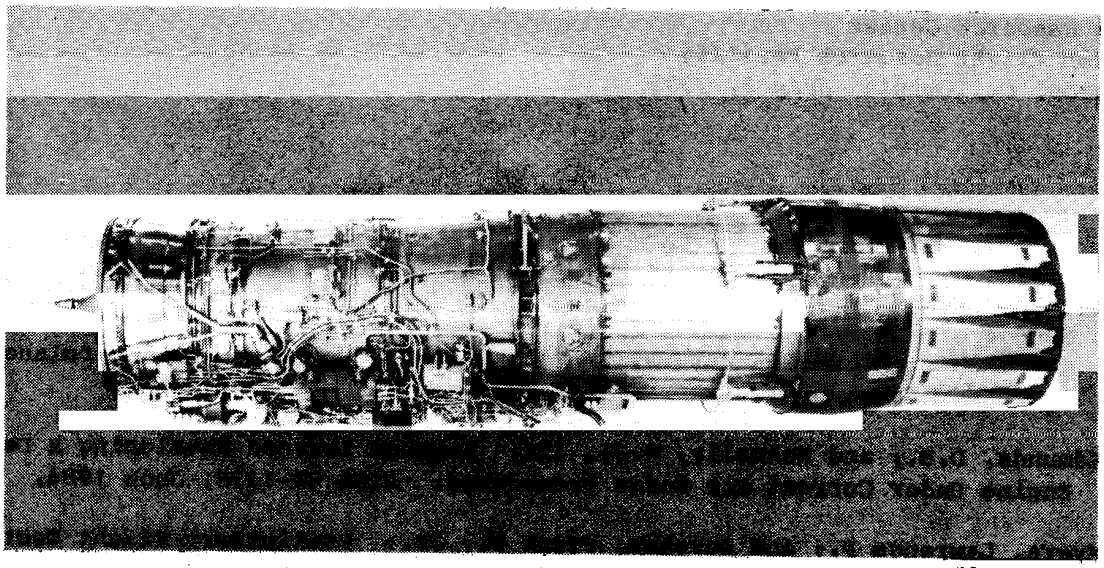

ECN 22746

Figure 2. F100 EMD test engine.

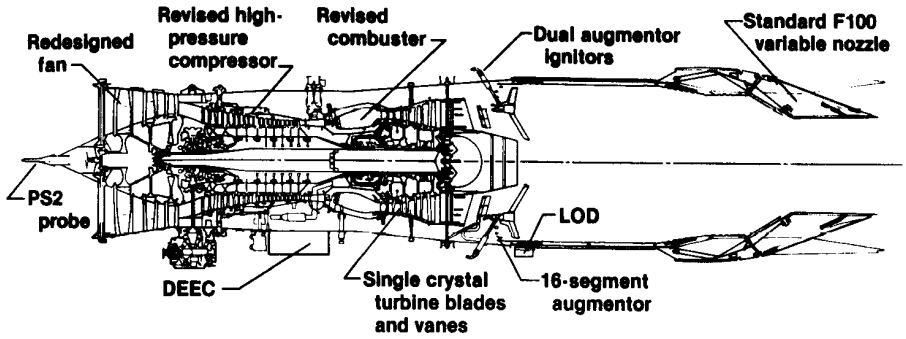

Figure 3. Features of F100 EMD engine in F-15 airplane.

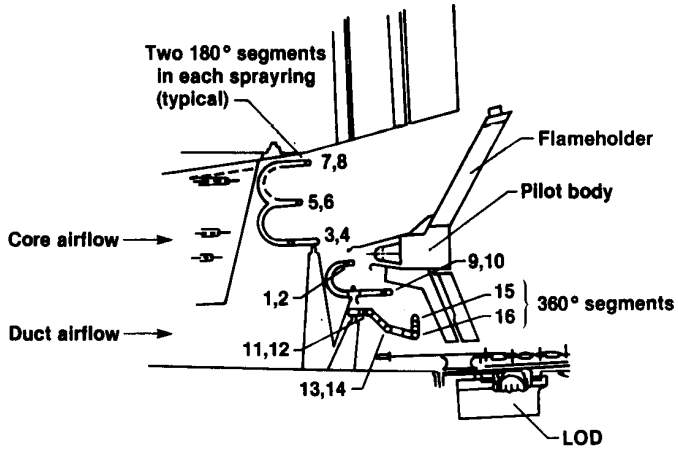

Figure 4. Sprayrings in F100 EMD 16-segment augmentor.

(a) Original 90° injection.

(b) Modified center-line injection.

Figure 5. Segment-1 (pilot) sprayring configuration.

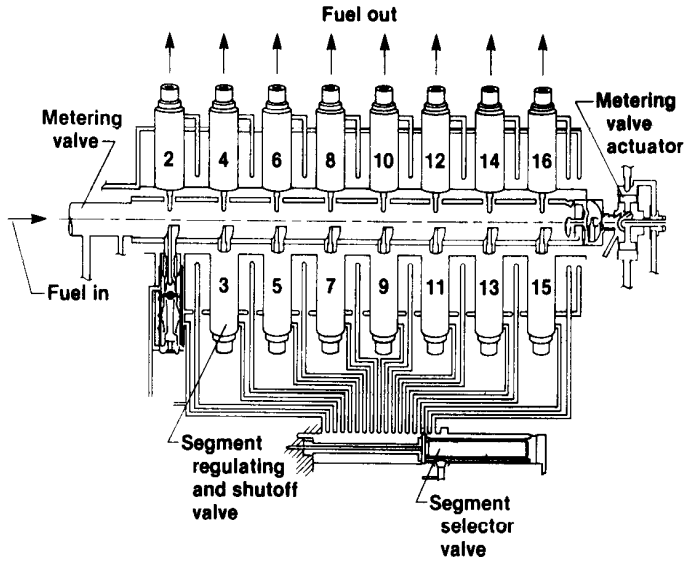

Figure 6. Sixteen-segment fuel control hardware for F100 EMD engine.

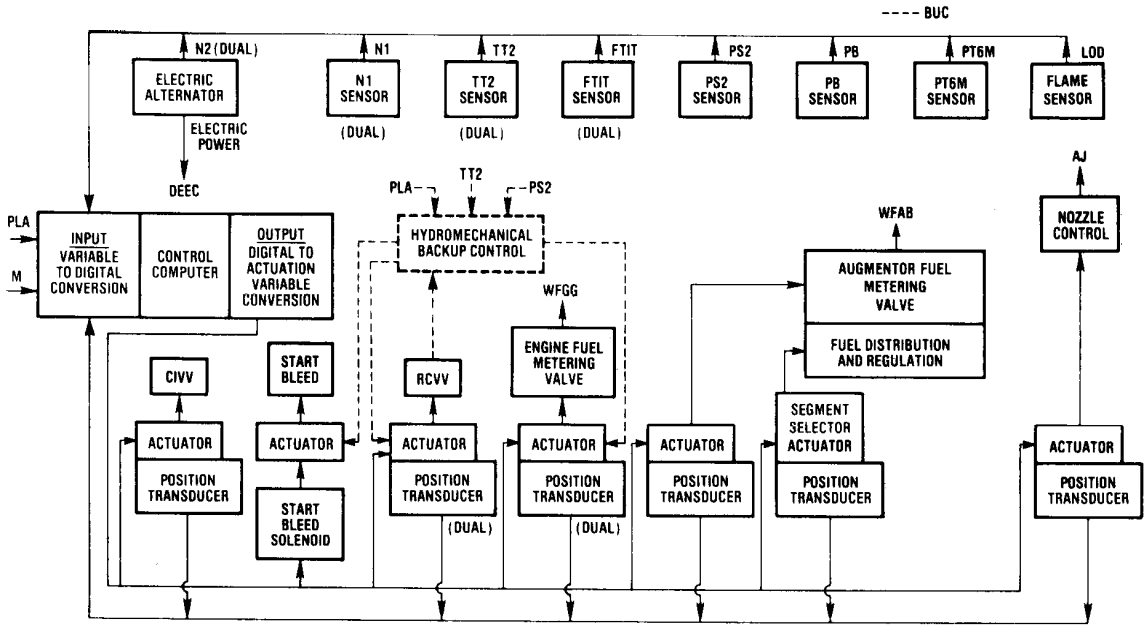

Figure 7. DEEC system used for F100 EMD tests.

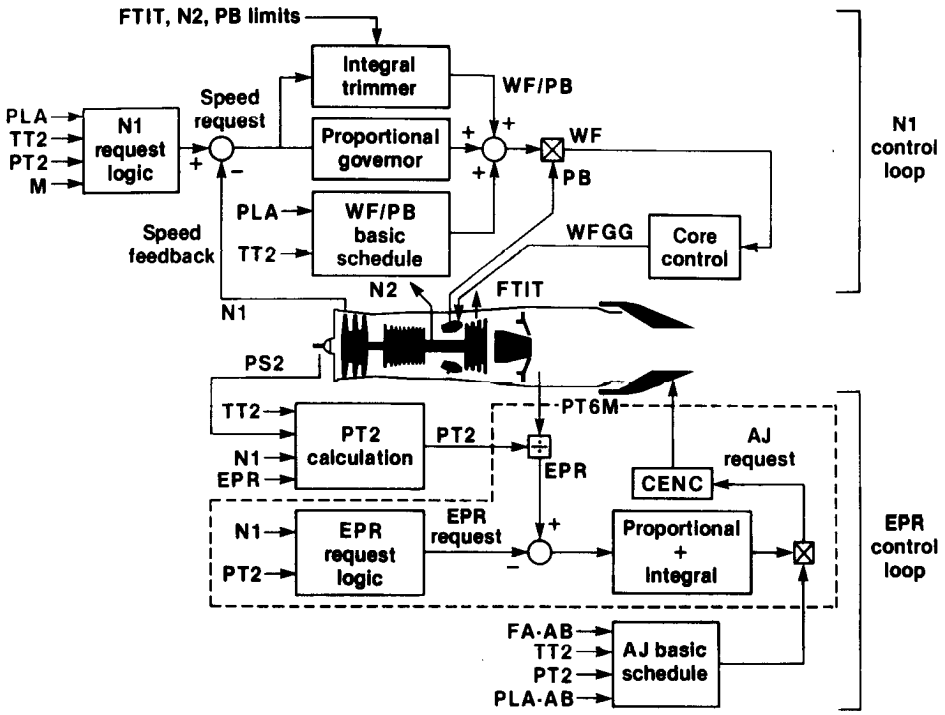

Figure 8. DEEC closed loop fan speed and EPR control logic.

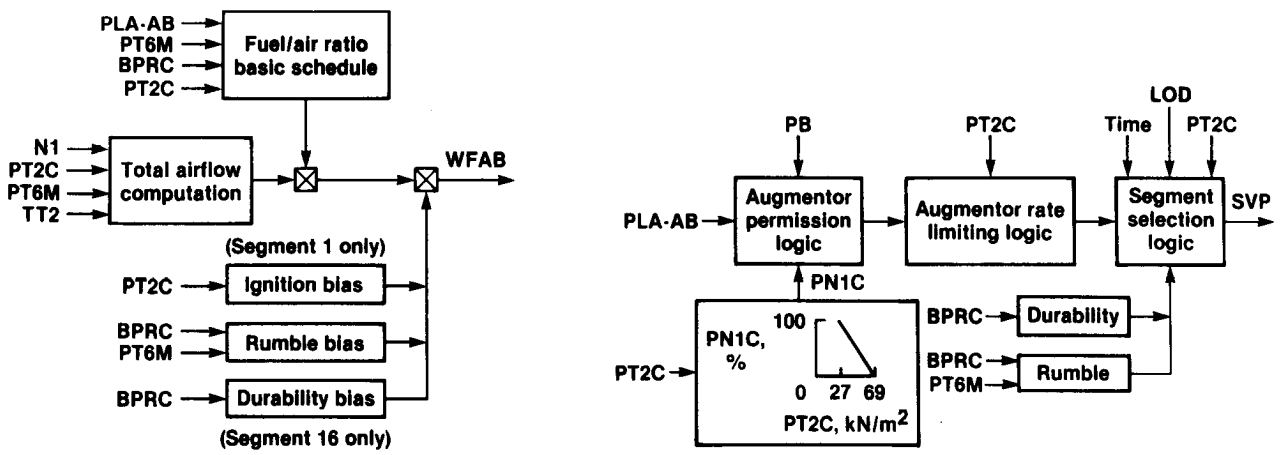

(a) Fuel flow logic. *(b) Sequencing logic.*

Figure 9. DEEC augmentor logic for 16-segment augmentor for F100 EMD engine.

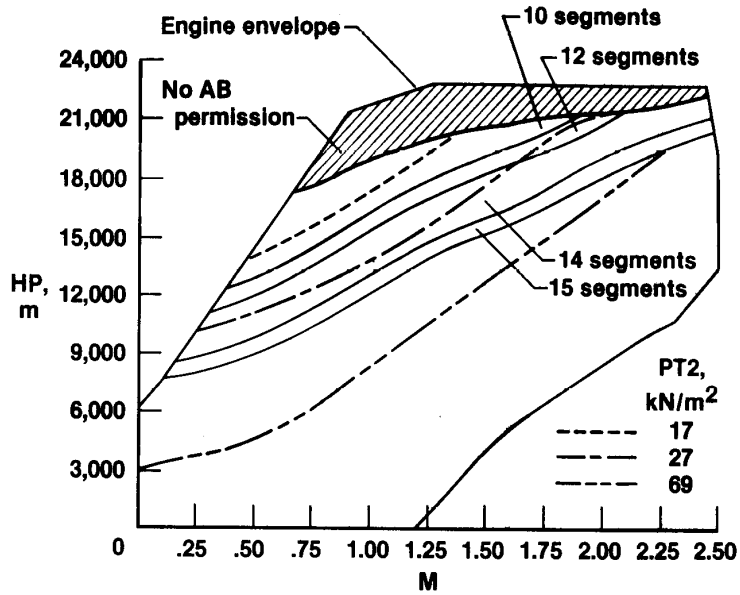

Figure 10. Engine envelope showing maximum number of segments permissible in PT2 regions.

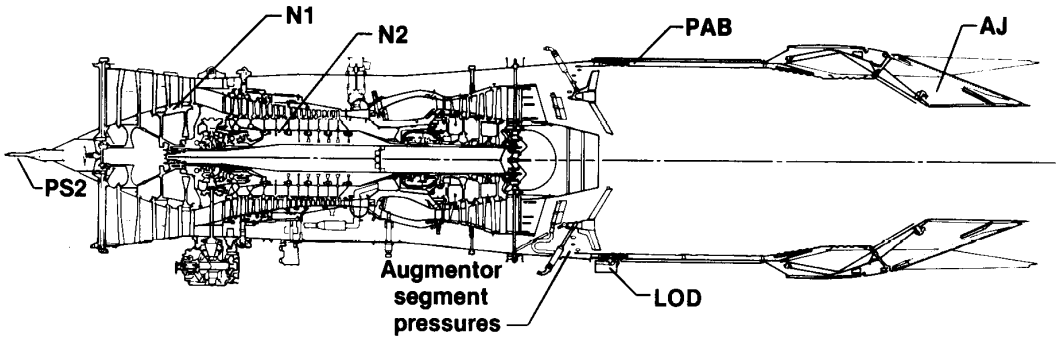

Figure 11. Instrumentation used in F100 engine augmentor evaluation.

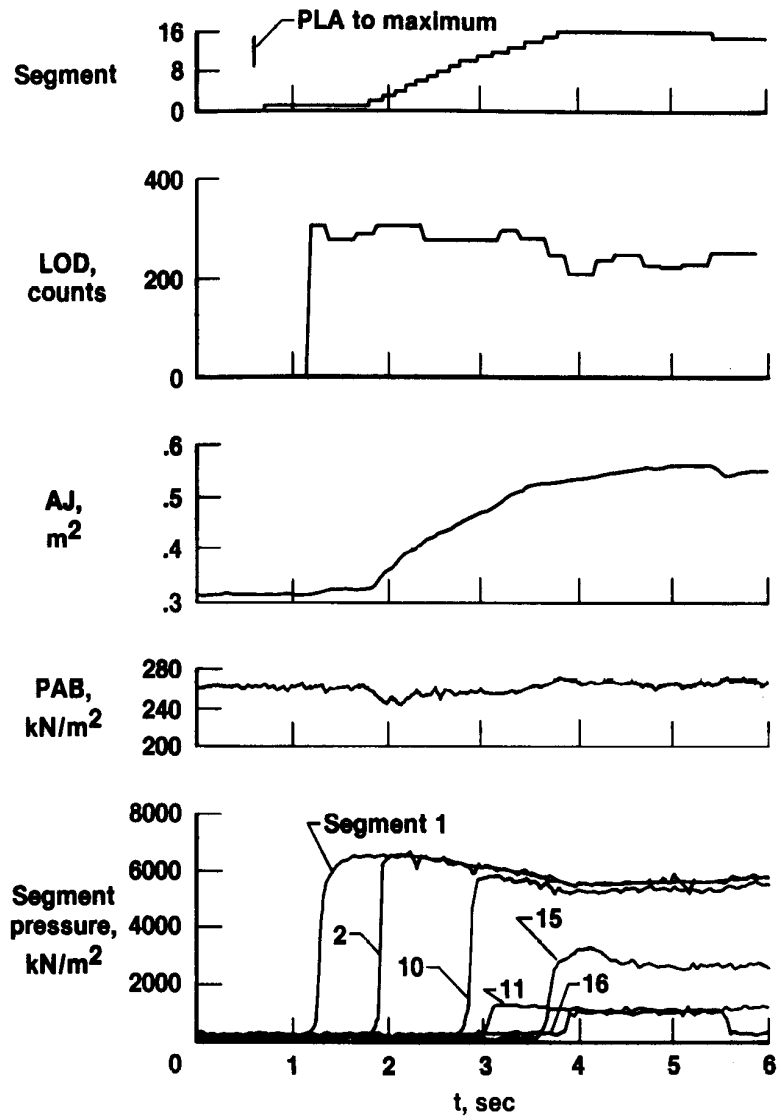

Figure 12. Time history of intermediate-to-maximum power throttle transient. VC = 550 knots, HP = 3600 m.

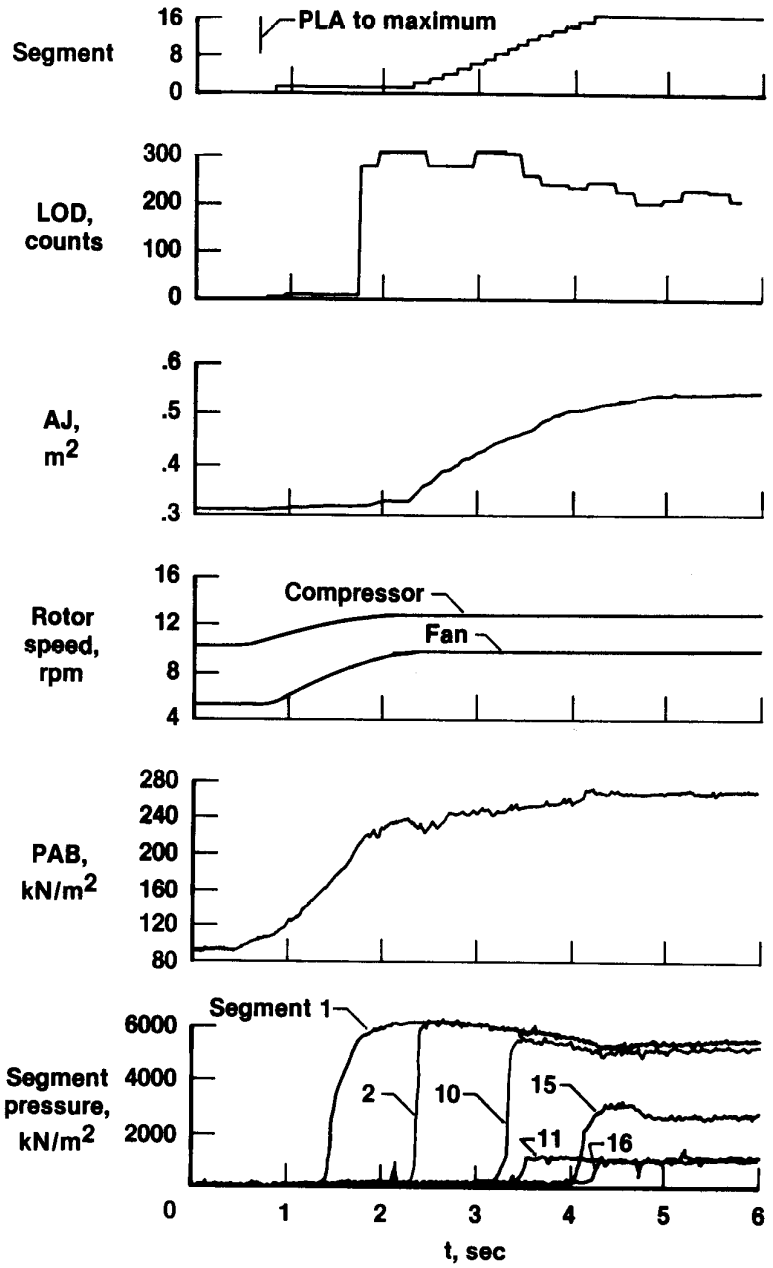

Figure 13. Time history of idle-to-maximum power throttle transient. VC = 550 knots, HP = 3600 m.

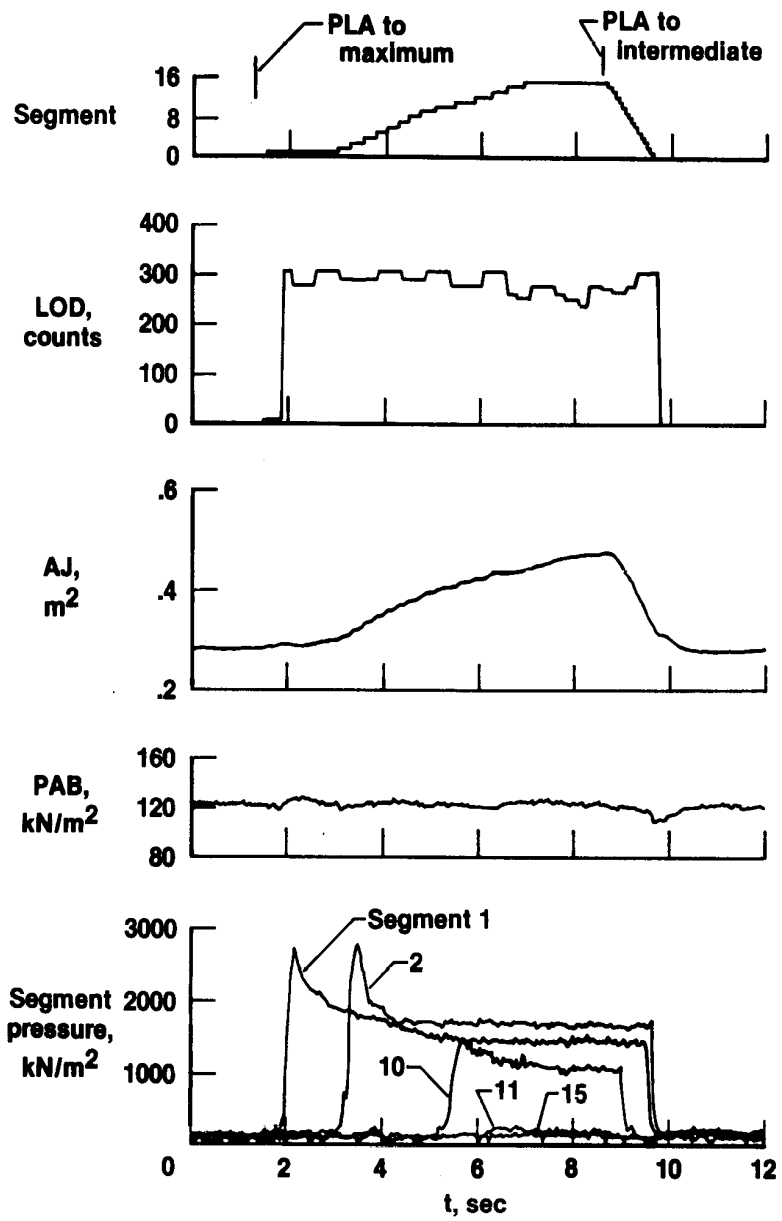

Figure 14. Time history of intermediate-to-maximum-to-intermediate power throttle transient. VC = 300 knots, HP = 10,700 m.

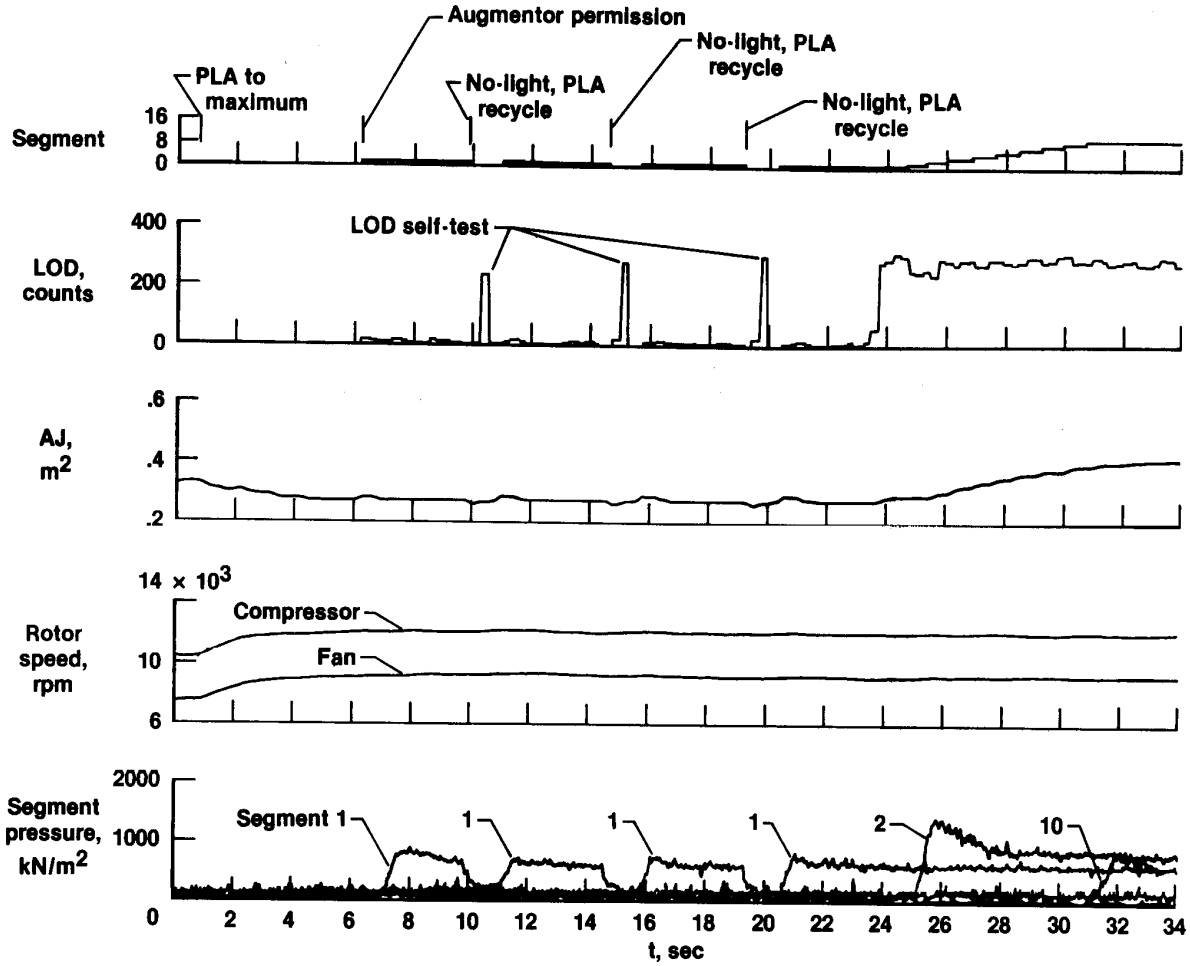

(a) 90° injection segment-1 sprayring.

Figure 15. Time history of an idle-to-maximum power throttle transient. VC = 125 knots, HP = 12,200 m.

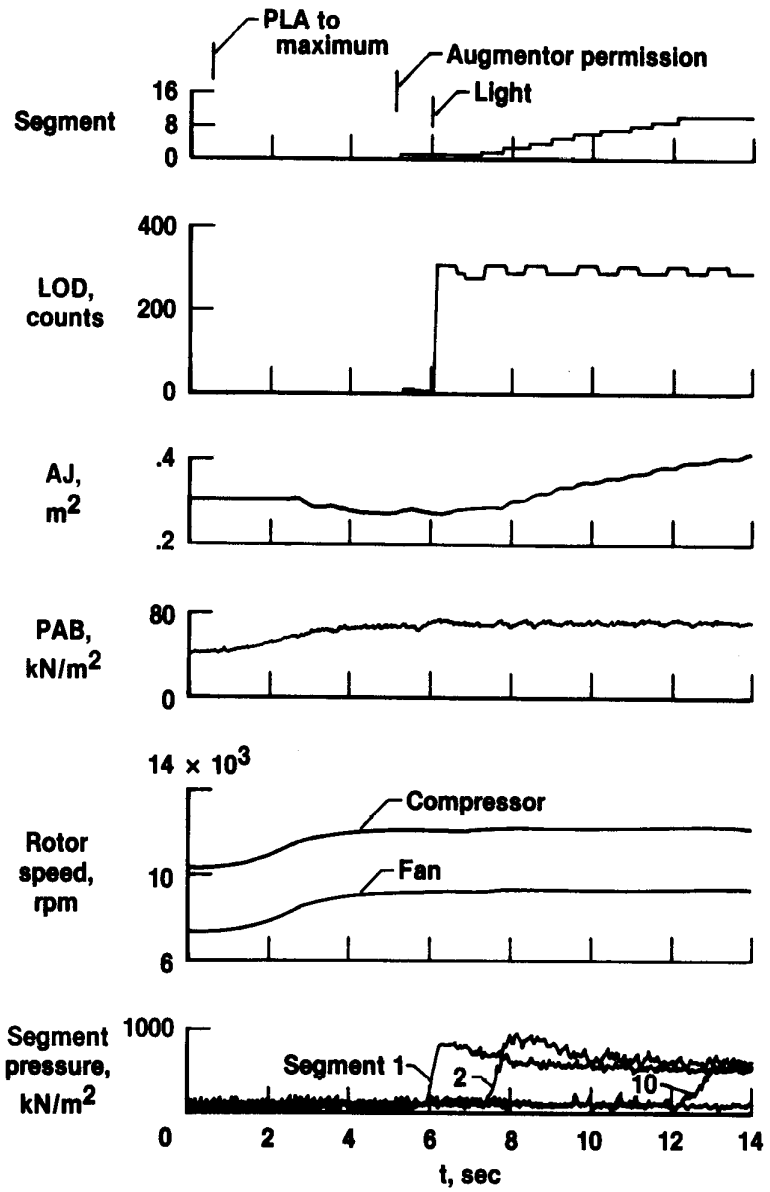

(b) Centerline injection segment-1 sprayring.

Figure 15. Concluded.

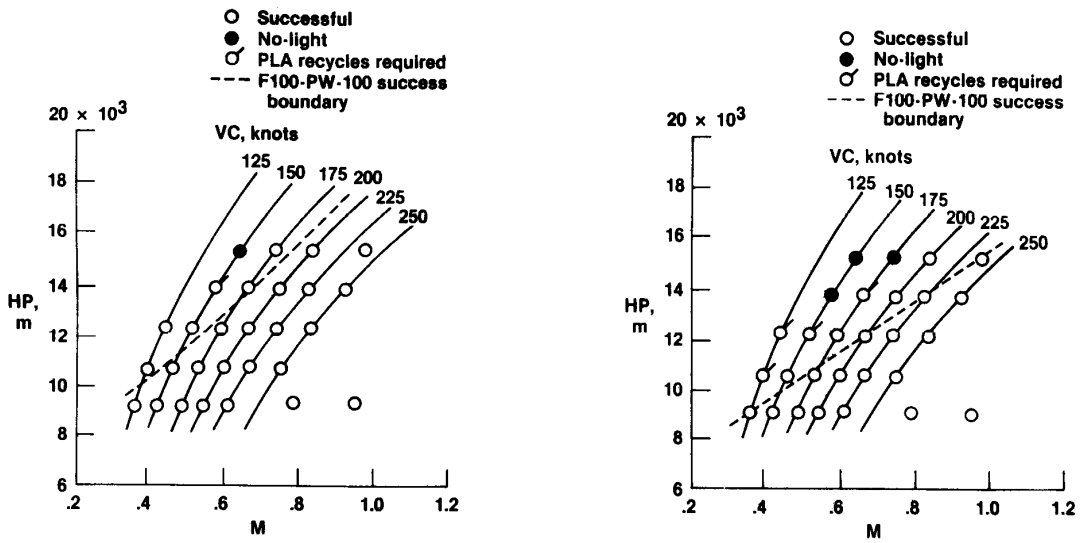

(a) Intermediate to maximum.

(b) Idle to maximum.

Figure 16. Summary of throttle transients, 90° injection segment-1 sprayring.

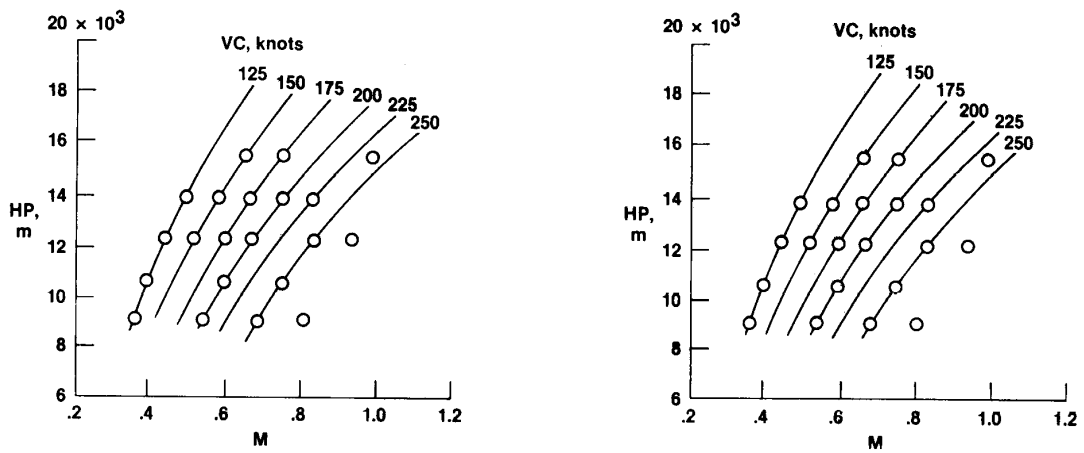

(a) Intermediate to maximum.

(b) Idle to maximum.

Figure 17. Summary of augmentor throttle transients, centerline injection sprayring. All transients were successful.

1. Report No.	2. Government Accession No.	3. Recipient's Catalog No.
NASA TM-86745		

4. Title and Subtitle	5. Report Date
Augmentor Performance of an F100 Engine Model Derivative Engine in an F-15 Airplane	May 1986
	6. Performing Organization Code
7. Author(s) James T. Walton and Frank W. Burcham, Jr.	8. Performing Organization Report No. H-1309
9. Performing Organization Name and Address NASA Ames Research Center Dryden Flight Research Facility P.O. Box 273 Edwards, CA 93523-5000	10. Work Unit No. RTOP 533-02-21
	11. Contract or Grant No.
12. Sponsoring Agency Name and Address National Aeronautics and Space Administration Washington, D.C. 20546	13. Type of Report and Period Covered Technical Memorandum
	14. Sponsoring Agency Code

15. Supplementary Notes

16. Abstract

The transient performance of the F100 engine model derivative (EMD) augmentor was evaluated in an F-15 airplane. The augmentor was a newly designed 16-segment augmentor. It was tested with a segment-1 sprayring with 90° fuel injection, and later with a modified segment-1 sprayring with centerline fuel injection. With the 90° fuel injection, no-lights occurred at high altitudes with airspeeds of 175 knots or less; however, the results were better than when using the standard F100-PW-100 engine. With the centerline fuel injection, all transients were successful to an altitude of 15,500 m and an airspeed of 150 knots: no failures to light, blowouts, or stalls occurred. For a first flight evaluation, the augmentor transient performance was excellent.

17. Key Words (Suggested by Author(s))	18. Distribution Statement
F100 engine, F100 EMD, Augmentor, Improved operability, DEEC, Engine performance, Afterburners, Flight test, F-15 airplane	[redacted] STAR category 07

19. Security Classif. (of this report)	20. Security Classif. (of this page)	21. No. of Pages	22. Price*
Unclassified	Unclassified	21	A02

For sale by the National Technical Information Service, Springfield, Virginia 22161.