NASA Technical Memorandum 100435

The Use of an Automated Flight Test Management System in the Development of a Rapid-Prototyping Flight Research Facility

E.L. Duke, M.D. Hewett, R.W. Brumbaugh, D.M. Tartt,
R.F. Antoniewicz, and A.K. Agarwal

May 1988

National Aeronautics and
Space Administration

NASA Technical Memorandum 100435

The Use of an Automated Flight Test Management System in the Development of a Rapid-Prototyping Flight Research Facility

E.L. Duke, M.D. Hewett, R.W. Brumbaugh, D.M. Tartt, R.F. Antoniewicz, and A.K. Agarwal
Ames Research Center, Dryden Flight Research Facility, Edwards, California

1988

National Aeronautics and
Space Administration
Ames Research Center
Dryden Flight Research Facility
Edwards, California 93523-5000

THE USE OF AN AUTOMATED FLIGHT TEST MANAGEMENT SYSTEM IN THE DEVELOPMENT OF A RAPID-PROTOTYPING FLIGHT RESEARCH FACILITY

Eugene L. Duke *
Marle D. Hewett †
Randal W. Brumbaugh ‡
David M. Tartt †
Robert F. Antoniewicz *
Arvind K. Agarwal §

Abstract

An automated flight test management system (ATMS) and its use to develop a rapid-prototyping flight research facility for artificial intelligence-based flight systems concepts are described. The ATMS provides a flight test engineer with a set of tools that assist in flight planning and simulation. This system will be capable of controlling an aircraft during flight test by performing closed-loop guidance functions, range management, and maneuver-quality monitoring. The rapid-prototyping flight research facility is being developed at the Dryden Flight Research Facility of the NASA Ames Research Center (Ames-Dryden) to provide early flight assessment of emerging artificial intelligence (AI) technology. The facility is being developed as one element of the aircraft automation program which focuses on the qualification and validation of embedded real-time AI-based systems.

Nomenclature

AFB	Air Force base
AI	artificial intelligence
Ames-Dryden	NASA Ames Research Center, Dryden Flight Research Facility
ATMS	automated flight test management system
a_n	normal acceleration, g
DFBW	digital fly-by-wire
DPS	digital performance simulation
DOF	degrees-of-freedom
FTE	flight test engineer
FTMAP	flight test maneuver autopilot
FTTC	flight test trajectory control
FTTG	flight test trajectory guidance
HIDEC	highly integrated digital electronic control
HiMAT	highly maneuverable aircraft technology
IEEE	Institute of Electrical and Electronics Engineers
NAS	national airspace system
NRCFRF	national remote computational flight research facility
NOE	nap-of-the-earth
p	roll rate, rad/sec
PLA	power lever angle (throttle), deg
RAV	remotely augmented vehicle
RPRV	remotely piloted research vehicle
TACT	transonic aircraft technology
TCP/IP	Transmission Control Protocol/Internet Protocol
V&V	verification and validation
δ_a	aileron command, deg
δ_e	elevator command, deg
δ_r	rudder command, deg

*NASA Ames Research Center, Dryden Flight Research Facility, Edwards, California.
†SPARTA, Inc., Laguna Hills, California.
‡PRC Systems Services, Inc., Aerospace Technologies Division, Edwards, California.
§Integrated Systems, Inc., Santa Clara, California.

Introduction

The automated flight test management system (ATMS) and the rapid-prototyping facility for artificial intelligence-based flight systems concepts are being developed at the Dryden Flight Research Facility of the NASA Ames Research Center (Ames-Dryden) as part of the NASA aircraft automation program. The ATMS provides a flight test engineer (FTE) with a set of tools that assist in flight planning and simulation. This system will be capable of controlling an aircraft during flight test by performing closed-loop guidance functions, range management, and maneuver-quality monitoring. The ATMS is being developed jointly by NASA, SPARTA, Inc., and Integrated Systems, Inc. The ATMS is being used as the prototypical system to develop a flight research facility for artificial intelligence-based flight systems concepts (Duke and others, 1986b).

The aircraft automation program is focused on applying interdisciplinary state-of-the-art technology in artificial intelligence (AI), control theory, and systems methodology to problems of operating and flight testing high-performance aircraft. As its primary focus, this program has the validation of real-time embedded expert systems. The major short-term goal of the program is the development of a rapid-prototyping flight research facility for AI-based flight systems concepts.

While this program has flight research as a major emphasis, it is neither based on a dedicated research aircraft nor does the program concentrate on one aircraft exclusively. The aircraft automation program is designed to be a broad-based applied research program in intelligent systems that capitalizes on opportunities within other flight research programs at Ames-Dryden.

The aircraft automation program at Ames-Dryden is one part of a larger, NASA-wide program with three major components:

1. automated nap-of-the-earth (NOE) flight,
2. operations within the national airspace system (NAS), and
3. tactical aircraft technology.

This NASA-wide program has components at both the Langley and the Ames Research Centers.

The ATMS was selected as the first major project, with the Ames-Dryden aircraft automation program, to provide an early demonstration of an application of real-time control using an expert system. The ATMS approach was particularly attractive because it included a straightforward integration of symbolic and numeric processing and would serve to develop the rapid-prototyping facility.

The rapid-prototyping facility includes real-time, high-fidelity simulators, numeric and symbolic processors, and high-performance research aircraft specially modified to accept commands from a ground-based, remotely augmented vehicle (RAV) facility (Petersen, 1981). The RAV technique is the key idea of the rapid-prototyping facility; it is the RAV technique that provides the unique capability of easy, direct transition from simulation to flight. This capability for rapid transition from simulation to flight is the most powerful argument for a RAV system. Almost as soon as a flight system concept can be demonstrated on a simulator, that concept can be flight tested using a RAV facility. This technique has been used on numerous programs in the past for the rapid prototyping of flight controls concepts. The capability of conducting flight research in AI is based on an enhancement to the RAV facility that incorporates symbolic and conventional processors in a distributed computing system based on Institute of Electrical and Electronic Engineers (IEEE) 802.3/Ethernet with Transmission Control Protocol/Internet Protocol (TCP/IP).

The background of the ATMS and the rapid-prototyping flight research facility for AI-based flight systems concepts are described. The ATMS and its role in developing the rapid-prototyping facility are described in detail.

Background

The ATMS is an outgrowth of the flight test trajectory guidance (FTTG) work performed over the past decade on such programs as the F-111 tactical aircraft technology (TACT) program, the F-15 propulsion–airframe integration program, and the F-15 10° cone program (Duke and others, 1983). The FTTG provided display information to the pilot to allow complex, demanding flight research maneuvers to be flown more accurately. The FTTG was extended to a closed-loop system for the highly maneuverable aircraft technology (HiMAT) program flight test maneuver autopilot (FTMAP) (Duke and others, 1986a). In conjunction with this flight research at Ames-Dryden, Integrated Systems, Inc. under contract to NASA has developed a design methodology for these types of controllers (Menon and Walker, 1985; Menon and others, 1985; Walker and Gupta, 1983). The design resulted in a flight test trajectory controller (FTTC) that is scheduled to be flight tested in the late summer or early fall of 1988 on the F-15 highly integrated digital electronic control (HIDEC) aircraft. A derivative of this FTTC (the trajectory controller) is a major component of the ATMS.

The ATMS project is structured around a flight test scenario and is an extension of work performed by SPARTA, Inc. under contract to NASA defining the need for a national remote computational flight research facility (NRCFRF) (SPARTA, Inc., 1987). The work on the NRCFRF contract defined the need for an expanded RAV capability and the demonstration of that capability in a flight program. In the ATMS, a range, energy, and failure management expert system is used in conjunction with the trajectory controller derived from FTTC to order maneuvers by priorities and energy management considerations while restricting the vehicle to the confines of a specified Edwards Air Force Base (AFB) test range. The ATMS can also be used on-line to control the research aircraft in flight and monitor the progress of a flight test, or off-line as a planning tool for ordering the test maneuvers for a flight. The expert system will use predictions of maneuvers based on simulation models for planning and will use actual flight test data measurements for real-time maneuver selection, data monitoring, and flight test management.

Need for a Rapid-Prototyping Flight Research Facility

The need for a rapid-prototyping flight research facility has long been recognized by NASA. At Ames-Dryden this concept evolved from experience with remotely piloted research vehicles (RPRVs) (Reed, 1974; Edwards and Deets, 1975; Brahney, 1986) and from experience with digital flight control systems on vehicles such as the 3/8th scale F-15 RPRV (Edwards and Deets, 1975) and the F-8 digital fly-by-wire (DFBW) aircraft (Szalai and others, 1976; Hartman and others, 1977). This rapid-prototyping flight research facility, known as the RAV facility, has been used extensively to test control law concepts on the F-8 DFBW (Hartman and others, 1977; Petersen, 1981; Larson and others, 1983). Other uses have included implementing the primary control system for RPRVs, such as the 3/8th scale F-15 and the highly maneuverable aircraft technology (HiMAT) vehicle (Petersen, 1979), and providing a remote computation facility for cockpit displays (Duke and others, 1983). The RAV concept was developed to aid in testing advanced or multiple control law concepts without the expensive and time-consuming process of repeated aircraft system modifications.

The rapid-prototyping flight research facility for AI-based flight systems concepts is being developed as an extension of the RAV facility to serve as an adjunct to the usual avionics development process. Typically, this process proceeds from research and development laboratories to simulators of increasing complexity, and, occasionally, to an expensive and often one-of-a-kind, single-purpose flight demonstrator vehicle. The rapid-prototyping facility described in this report, in a sense, is simply an extension of the more elaborate high-fidelity simulators. However, this facility is viewed more realistically as a bridge between simulation and demonstrator development.

The value of implementing a prototype system is the discovery and solution of many problems before large commitments of resources have been expended. By addressing these problems (or potential problems) early in the development cycle, one can often avoid many of the more costly and time-consuming exercises associated with late introduction of changes and modifications. Prototyping is recognized as an important part of the development process for both AI systems and aircraft: the rapid-prototyping facility described in this report adds to the developer's ability to continue this process before implementing on a demonstration aircraft. This is especially important in the transition from simulation to flight. Thus, by providing a flexible, general-purpose capability for the rapid prototyping of AI-based flight systems concepts, this facility will allow the early solution of problems in future development programs and will allow the system developer to benefit from flight testing while minimizing the cost and schedule burdens normally associated with flight.

The Remotely Augmented Vehicle (RAV) Concept

The main elements of the RAV system concept, shown in Fig. 1, are

1. a specially modified aircraft,
2. an auxiliary computational facility, and
3. a simulator.

Each element serves a unique function that allows the rapid transition from simulation to flight. This capability for rapid transition is the most powerful argument for a RAV system. Almost as soon as a flight system concept can be demonstrated on a simulator, that concept can be flight tested using a RAV facility.

The aircraft used in a RAV flight research facility requires two main modifications. The first modification is the addition of sensors and a high-quality data instrumentation system. The data collected by this system are transmitted to the auxiliary computational facility using the telemetry downlink. The other modification requires the installation and integration of an uplink receiver into the aircraft system. If closed-loop control is desired, the uplink is interfaced to the flight control system; if the uplink is used for display purposes, the onboard display system is interfaced. Both uplink functions may be used simultaneously. No further vehicle modifications are required after the test aircraft has been configured with the instrumentation system, downlink transmitter, and uplink receiver built into the system.

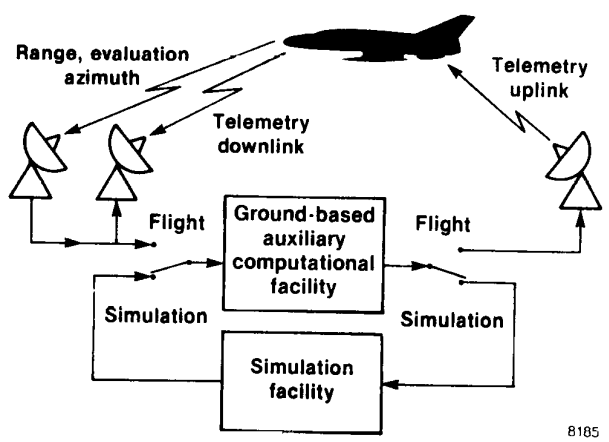

Fig. 1 Remotely augmented vehicle concept.

The auxiliary computational facility (Fig. 2) consists of a downlink receiver, a suite of computers, and an uplink transmitter. The downlink telemetry is received

and passed to the ground-based processors. These processors execute the calculations necessary for the task being performed and compute the output commands to be uplinked to the aircraft (Fig. 1). Because the auxiliary computers used in the simulator and the flight system are identical, software developed in the simulator can be moved into the flight system without modification. The use of an auxiliary computational facility is an advantage because the research system can be isolated from the main aircraft system so that software changes do not affect the integrity of the aircraft system. This results in payoffs in cost, schedule, and flight safety.

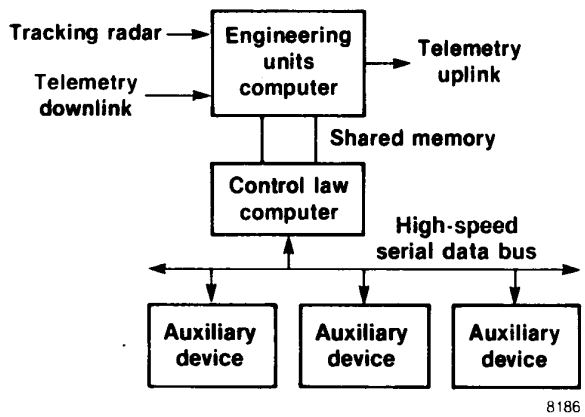

Fig. 2 Current configuration of the ground-based auxiliary computational facility.

The use of ground-based auxiliary computers is not essential to the RAV concept, although ground basing may offer significant advantages over the use of an auxiliary computer onboard the aircraft. The main advantage of a ground-based system is that the components of such a system need not include flight qualified, ruggedized computers. Laboratory quality computers can be used in the ground facility. The differences in these requirements allow state-of-the-art computers to be used as auxiliary processors in flight systems. In fact, even breadboard systems conceivably could be used in the ground-based facility. For the rapid-prototyping facility being developed using the ATMS, all auxiliary computers will be ground based. In the second stage of facility development, the auxiliary computational capability will be distributed between ground and airborne processors.

The simulator is used for flight system development, verification, and validation. Simulators in use at Ames-Dryden range from simple software models of the vehicle aerodynamics and onboard systems to complex flight-hardware-in-the-loop systems, such as the F-8 DFBW/RAV (Petersen, 1981) and the HiMAT simulations (Evans and Schilling, 1984). However, all of these simulators must include sufficient realism and flight hardware to allow the development of flight system concepts. By including flight system hardware in the simulator, the simulation becomes a realistic and credible systems integration and software system validation facility. The use of simulations in the validation of both onboard and ground-based flight systems hardware and software is discussed by Petersen (1981), Evans and Schilling (1984), Szalai and others (1978), Myers and Sheets (1980), and Myers and others (1983).

Validation of Embedded Expert Systems

The validation of embedded expert systems is the primary focus of the aircraft automation program at Ames-Dryden. In the aircraft automation program, techniques used for the verification, qualification, and flight validation of flight-critical conventional systems will be extended initially to expert systems such as the ATMS and eventually to intelligent knowledge-based systems in general.

The ATMS will be used as the premier system for the development and demonstration of a validation methodology for embedded expert systems. The ATMS is an ideal application to develop this methodology because

1. the ATMS is mission rather than flight critical, and
2. the methodology used for the verification and validation (V&V) of flight control systems can be applied to the system.

The preference for developing validation methodologies for a mission-critical system rather than a flight-critical system arises from the basic distinctions between these two systems: a flight-critical system is one whose failure can cause loss of the vehicle; a mission critical system is one whose failure can result in the inability to complete some mission within a flight. The verification, qualification, configuration management, and flight validation requirements are more severe for a flight-critical system than for a mission-critical system.

The ATMS also represents a system that is simple enough to allow almost direct transference of the V&V methodology used with conventional flight-critical systems to the ATMS. The ATMS has a limited number of choices available for any of its functions; the decision complexity is not so extreme as to preclude reasonably exhaustive testing.

Components of the Automated Flight Test Management System

The main components of the ATMS are as follows:

1. a trajectory controller based on the flight test trajectory control (FTTC) system (Menon and Walker, 1985; Menon and others, 1985),

2. a flight test planning expert system,
3. a man–machine interface, and
4. a flight test monitoring expert system.

The partitioning of functions in the ATMS was designed with two goals in mind:

1. minimizing the bandwidth of the communication between components and
2. appropriate distribution of functions between numeric and symbolic processing.

The components described in this section perform functions that are shown in Fig. 3. Figure 4 shows the envisioned, fully developed ATMS with program-planning and block-planning capabilities added to the flight test planning expert system (see following section entitled Flight Test Planning Expert System) and an in-flight replanning capability added to the flight test monitor expert system.

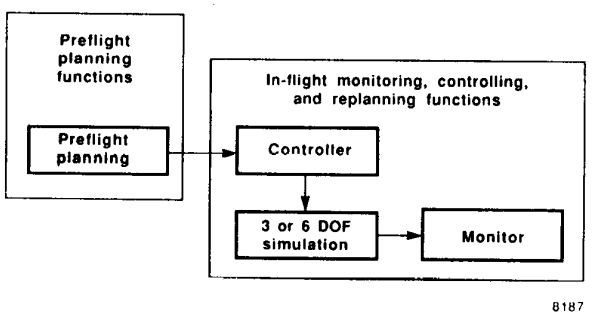

Fig. 3 Current ATMS functions.

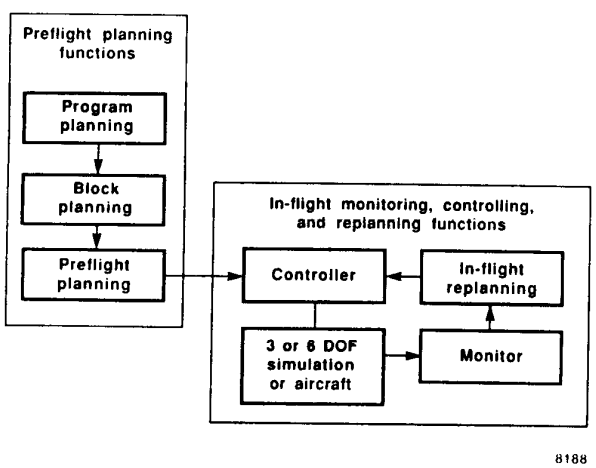

Fig. 4 ATMS functions in final system.

Trajectory controller

The trajectory controller is a collection of outer-loop guidance control laws that provide precise control for a vehicle performing high-quality flight research maneuvers such as level accelerations, windup turns, and pushover-pullup maneuvers (Table 1). The trajectory controller is algorithmic, implemented in FORTRAN 77, and executes on a numeric processor.

The interface between the trajectory controller and the remaining components of the ATMS has been designed to minimize the bandwidth of the communications across that interface. The trajectory controller accepts an input list of maneuvers with commands consisting of an ordered list of maneuvers. Each maneuver consists of trim point, maneuver conditions, and end conditions (Table 1). These commands contain from three to seven parameters each.

Once maneuver commands are received by the trajectory controller, the controller operates independently of the ATMS until another command list is received. (However, if any aircraft-operating limits or range boundaries are exceeded, the flight test monitor expert system can interrupt the current maneuver and issue commands to bring the vehicle back within those limits and boundaries.) The trajectory controller generates trajectories and trajectory-following controls based on the maneuver commands and the aircraft instrumentation. The communication between the trajectory controller and the aircraft (or aircraft simulation) requires commands comparable to those that would be used by a pilot in controlling an aircraft (stick, pedal, and throttle commands). These aircraft commands must be computed every 20 ms during real-time operation.

Figure 5 shows the components of the trajectory controller. The trajectory controller accepts maneuver commands and uses the information contained in those commands to select command generation and pseudocontroller algorithms. The command generator also uses the trim point and maneuver condition information as well as aircraft state information to generate the requested trajectory. Aircraft measurements are used by the command generator to determine trajectory error data that are sent to a pseudocontroller that converts trajectory error data into aircraft state commands. The command generator and pseudocontroller operate on a frame time of approximately 100 ms and are referred to collectively as the slow controller.

The components of the trajectory controller collectively referred to as the fast controller are the prelinearizing transformation equations and the aircraft (or simulation model) primary flight control system. The prelinearizing transforms operate on a 20 ms frame time and compute an inverse aircraft model that results in normal acceleration (a_n), roll rate (p), and throttle (PLA) commands. In the flight system, these commands are transmitted to the aircraft using the telemetry uplink system. The a_n and p commands are inserted into the primary control system downstream

TABLE 1.—TRAJECTORY CONTROLLER INPUTS

Type of maneuver	Trim point	Maneuver condition	End conditions
Level acceleration	Altitude Mach number	Mach number rate	Mach number
Pushover-pullup	Altitude Mach number	Angle-of-attack rate Angle-of-attack increment Allowable altitude range	—
Wind-up turn	Altitude Mach number	Angle-of-attack rate Mach number tolerance Turn direction	Angle of attack
Turn segment	Altitude Mach number	Turn direction	Heading
Cruise segment	Altitude Mach number	—	Distance

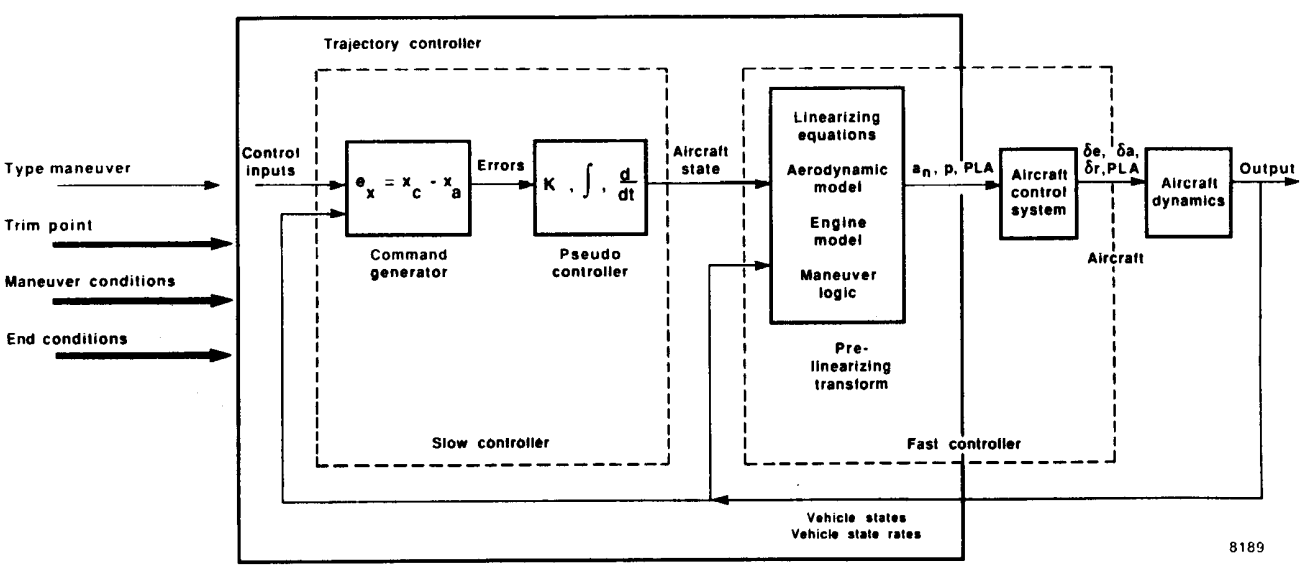

Fig. 5 Components of trajectory controller.

of the stick-shaping and pilot-input prefilters. The outputs of the primary control system are surface commands (δ_a, δ_e, and δ_r). The *PLA* commands are sent directly to the engine control system.

Flight Test Planning Expert System

Flight tests must be planned at several levels. At the highest level, the flights required for an entire program are established by the project requirements. At the next level, blocks of flights are determined by a more detailed analysis of the project requirements and are partitioned according to similarity of prerequisites, flight envelope requirements, and test needs to establish a progression of blocks of flights satisfying the high-level project requirements. Within each block a number of individual flights is identified based on the detailed analysis of maneuvers required to satisfy the block requirements. Individual flights then are identified with a number of these maneuvers and the FTE must order maneuvers within a flight based on considerations of range, fuel, and energy management, as well as maneuver priorities.

The ATMS, which is designed to assist the FTE in these planning functions, ultimately will contain program, block, and flight planning capabilities. However, for the current phase of the program, only the flight planner has been implemented in the test planner expert system. The test planner accepts a list of maneuvers that represents up to the equivalent of approximately two flights of maneuvers and orders them using rules that consider maneuver priorities, energy management, test range boundaries, and envelope limitations. Maneuvers that cannot be included in the flight plan are eliminated from the current plan.

A detailed functional flow diagram of the flight test planning expert system is shown in Fig. 6. This diagram shows, in sequential order, a model of the logical flow within the flight test planning expert system implemented by the rules within its knowledge base. The flight test planning expert system accepts test plan inputs from the FTE using the menu driven and icon-based man–machine interface (see following section entitled Man–Machine Interface) or previously stored test plan entries. When the list of test maneuvers is entered into the ATMS, the FTE selects the flight test planning expert system which then uses its knowledge base to order maneuvers, set priorities, and construct a trajectory. As each maneuver is added to the planned trajectory, it is tested to ensure that no system constraints have been violated. When constraint violations occur, the flight test planning expert system displays information to the FTE describing the constraint violations and provides an explanation of the constraint violation, if requested. Maneuver priority is extremely impor-

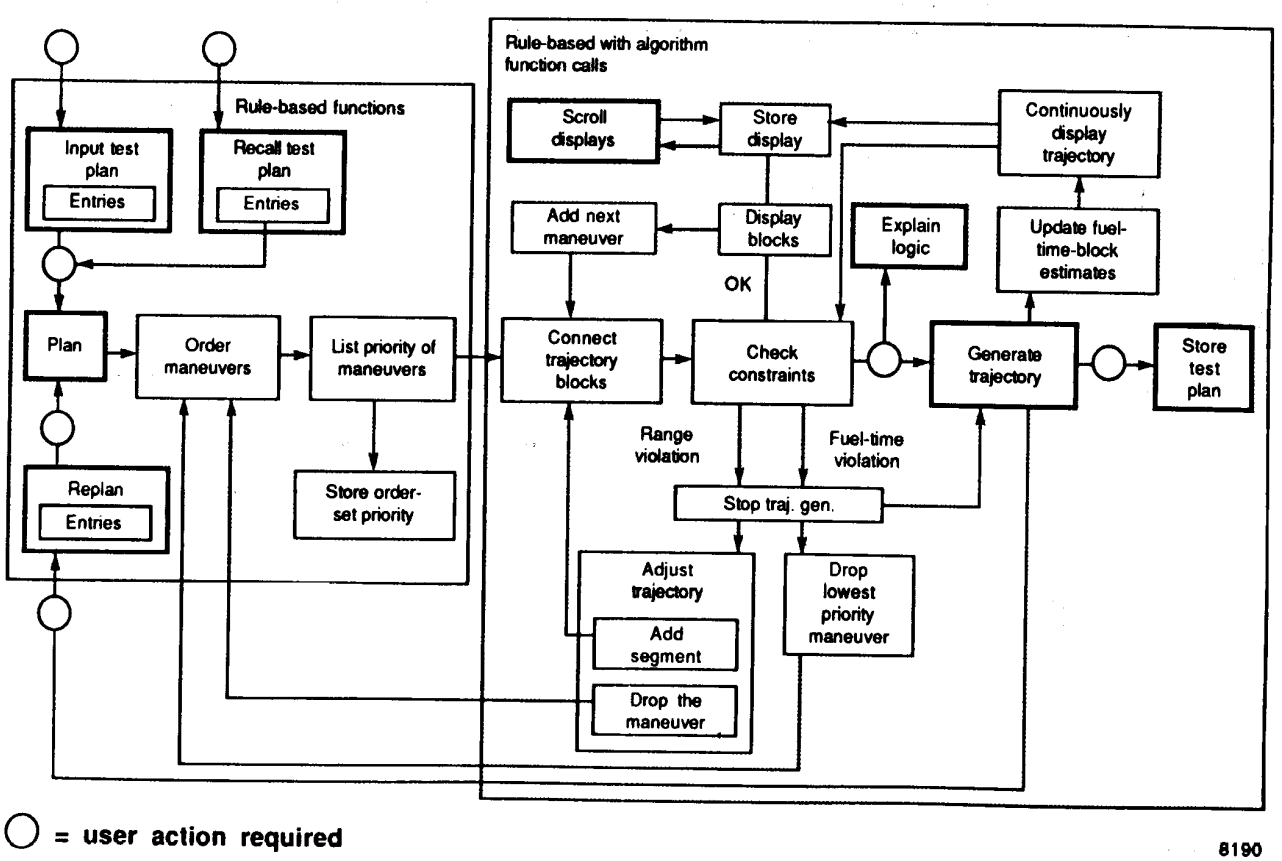

Fig. 6 Functional flow diagram of the flight test planning expert system.

tant when fuel constraints are tested: lower priority maneuvers are removed from the test plan to satisfy fuel constraints.

Man–Machine Interface

The man–machine interface component of the ATMS provides a means of information entry and display. This interface is used during flight planning and flight plan execution. The main display (Fig. 7) has three major components: the map, timeline, and command menu.

There are two types of displays in the map section of the main display — the trajectory planning display (Fig. 8) and the trajectory map display (Fig. 9). These map displays present a two-dimensional view of the test range with the aircraft trajectory superimposed. However, the stored map is larger than the portion presented on the display; pan and scroll are selected by using the appropriate mouse buttons depicted across the top of the display. A navigate button is also included to quickly determine course and distance between present aircraft position and any point within the stored map.

The trajectory planning display (Fig. 8) is used to lay out maneuvers and provide a preliminary ordering of the selected maneuvers. This display is also used to provide the FTE the trajectory that results by invoking the flight test planning expert system. The trajectory map display (Fig. 9) is used to monitor the performance of the aircraft (or aircraft simulation) during the execution of the flight plan.

The timeline component of the main display presents information on the aircraft trajectory in terms of altitude versus time or events; Fig. 10 shows a timeline display of altitude versus time. Timeline scroll buttons allow the FTE to examine different time or event segments by scrolling the timeline. The command menu portion of the main display allows the user to select (using mouse or keyboard inputs) ATMS operational modes, maneuvers, or explanations of ATMS actions. Explanations of ATMS action are displayed in the map portion of the main display.

The timeline display is used to present the FTE with a history of the planned or executed trajectory of the vehicle. By presenting an altitude versus time or event cross-plot, the ATMS allows the FTE to understand the energy management aspects of the maneuvers. This display also provides an easy reference to the events of the flight or flight plan.

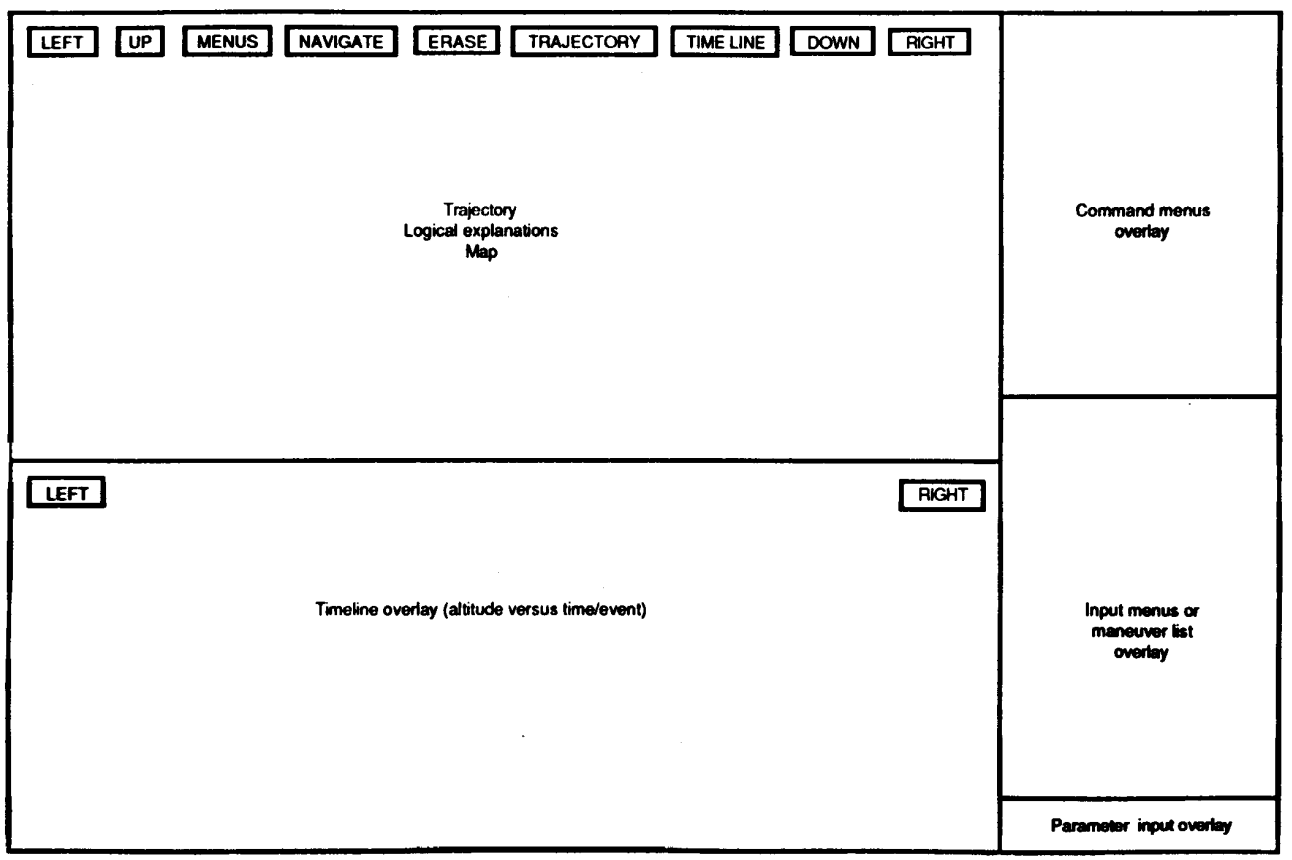

Fig. 7 Layout of main display.

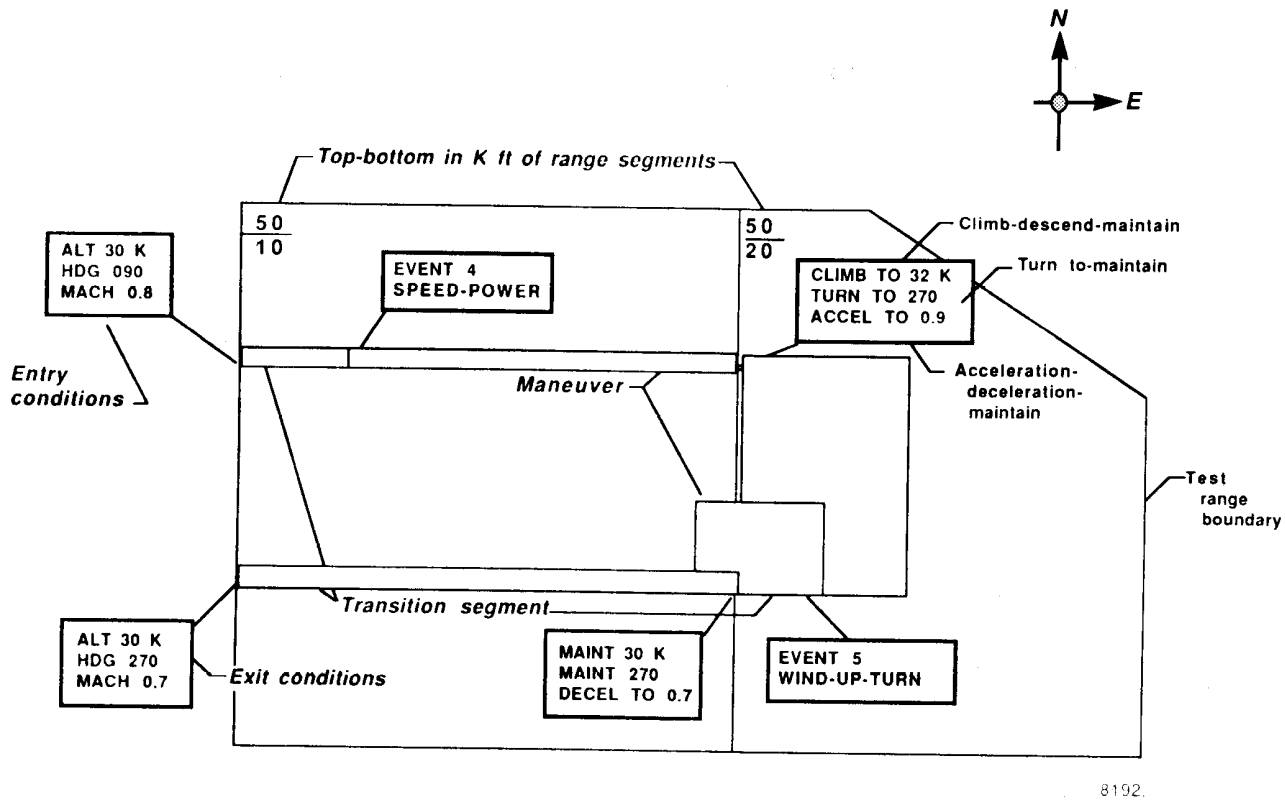

Fig. 8 Trajectory planning display.

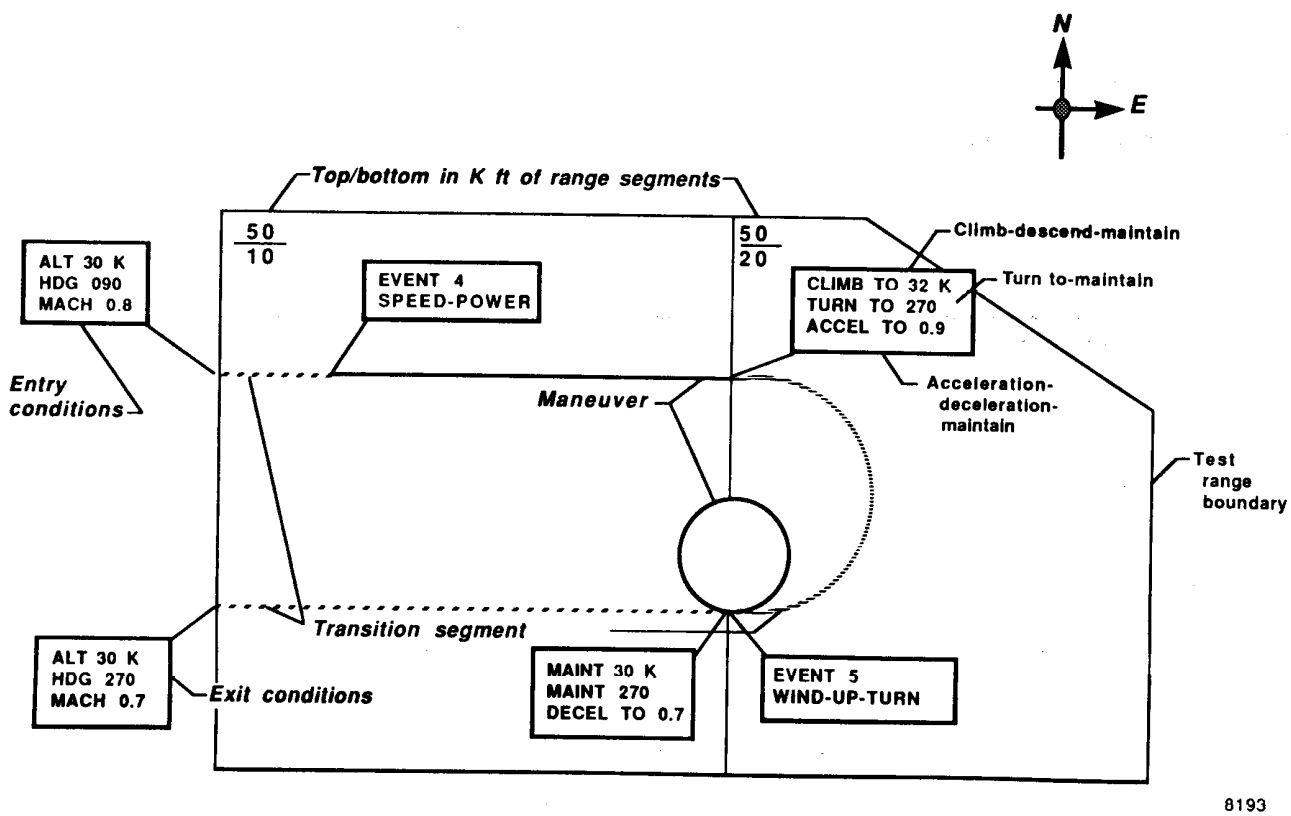

Fig. 9 Trajectory map display.

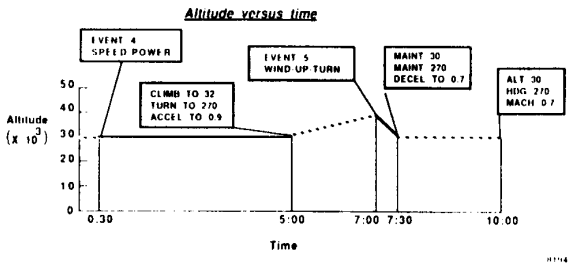

Fig. 10 Altitude versus time timeline display.

The command menu portion of the main display provides the user with a hierarchical display of option menus for ATMS operational mode selection. Figures 11, 12, and 13 show the elements of this hierarchy for entering maneuvers for a test plan. At the first level (Fig. 11), the master menu allows the FTE to select the operational mode of the ATMS or input data modifying the maneuvers, range, or aircraft data. All of the second-level menus and the options available in each are also shown in this figure. Figure 12 shows the third- and fourth-level menus for test plan input. If the input test plan option of the planner menu (Fig. 11) were selected, the third level input test plan menu (Fig. 12) would appear in the command portion of the main display. The fourth level (Fig. 12) shows the results of all possible selections at the third level of the input test plan menu. Figure 13 shows the maneuver icons selectable from the fourth-level maneuver menu shown in Fig. 12. These maneuver icons allow the FTE to specify individual maneuvers and define the trajectory controller inputs shown in Table 1.

Flight Test Monitor Expert System

The flight test monitor expert system provides an interface between the FTE and either the planned trajectory or the actual trajectory (whether generated by simulation or flight). This system also provides the trajectory controller with inputs from the list of maneuvers in the planned trajectory. Figure 14 shows a functional flow diagram of the flight test monitor expert system.

The flight test monitor expert system issues maneuver requests to the trajectory controller, then monitors the aircraft parameters of interest to ensure that no system constraints (that is, aircraft operating limits or range boundary constraints) are violated. The flight test monitor expert system also monitors maneuver quality. When a system constraint is violated

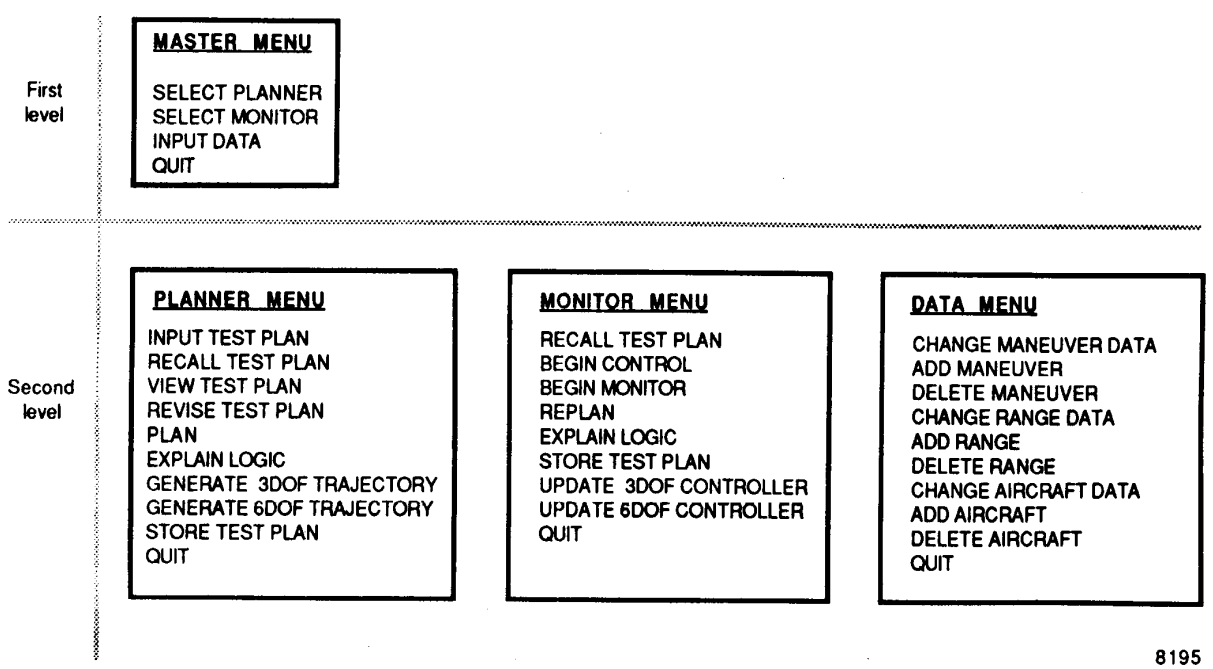

Fig. 11 First- and second-level menus.

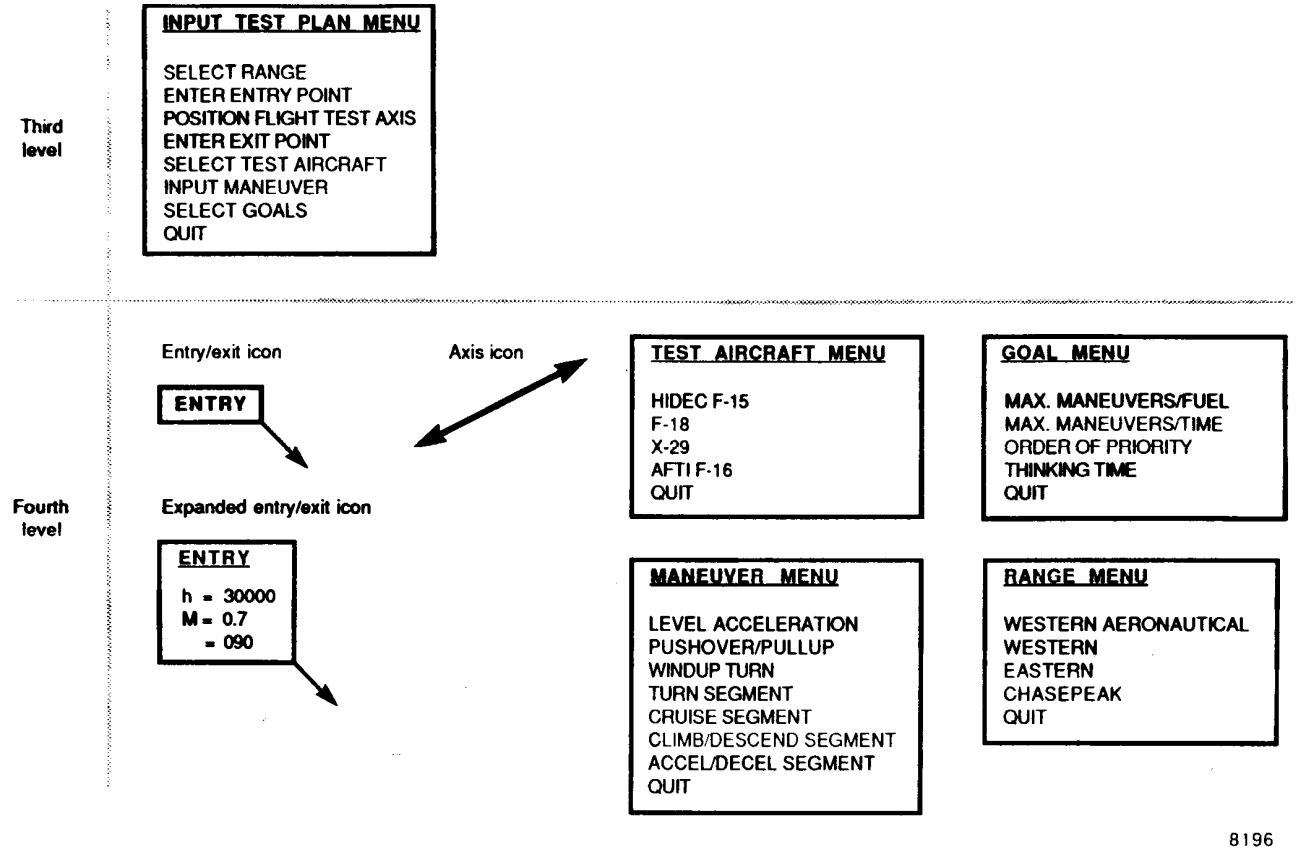

Fig. 12 Third- and fourth-level input test plan menus.

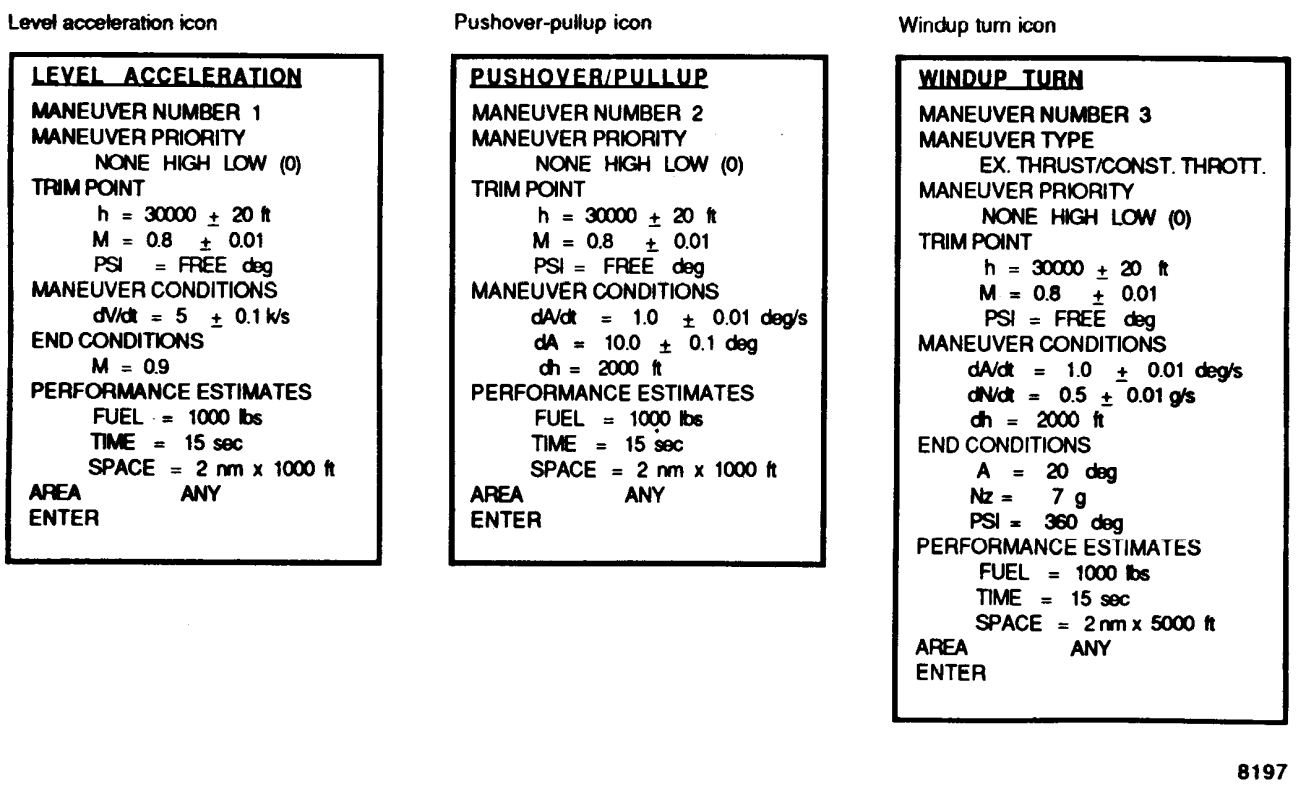

Fig. 13 Maneuver icons.

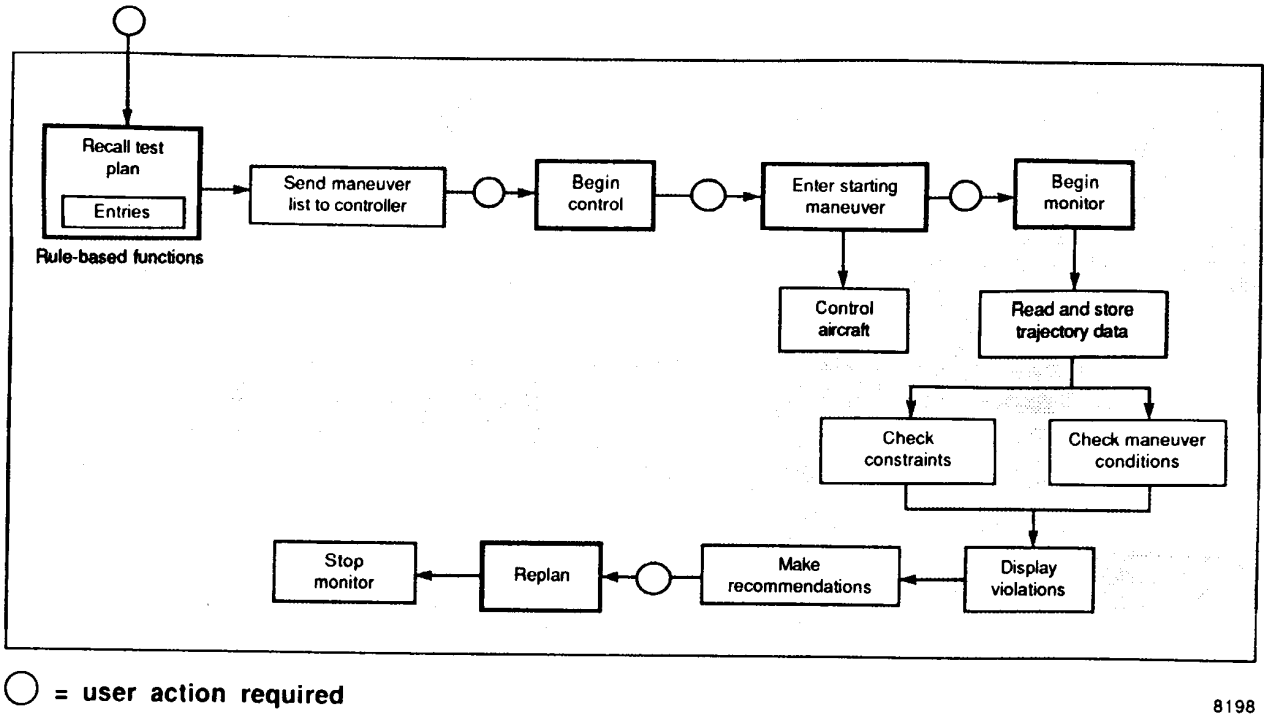

Fig. 14 Fight test monitor expert system functional flow diagram.

or the quality of a maneuver is unacceptable, the flight test monitor expert system notifies the FTE of the problem and makes recommendations based on the information within its knowledge base. Each maneuver is selected, in order, from the list of planned maneuvers; the flight test monitor expert system starts these maneuvers and then waits for the trajectory controller to finish a maneuver before proceeding to the next maneuver on the list.

Automated Flight Test Management System Configurations

The ATMS has three configurations: the FTE workstation, the simulation validation system, and the flight system. These configurations address the two main applications of the ATMS: (1) flight test planning and (2) flight test execution. The FTE workstation and the simulation validation system configurations are used to develop and evaluate flight test plans. The simulation validation system configuration is also used to aid in the validation of the total flight system including aircraft modifications. The flight system configuration is used to actually conduct flight test by executing the flight test plan, monitoring the performance of the aircraft, and controlling the aircraft in flight.

Flight Test Engineer's Workstation

The configuration of the FTE workstation is shown in Fig. 15. This system is used by the FTE to develop preliminary flight test plans without having to use the aircraft simulator. This provides the FTE with a stand-alone system that is separate from the aircraft simulator which is always in great demand.

The FTE workstation includes two computers: a Texas Instruments (TI) Explorer LX (Texas Instruments, Inc., Austin, Texas) and a MASSCOMP 5400 (Masscomp Computer Systems, Westford, Massachusetts). The LISP processor on the Explorer contains the flight test planning expert system, the man–machine interface system, and the rule-based portion of the flight test monitoring expert system. The LX board on the Explorer (a Motorola 68020-based system; Motorola Inc., Schaumburg, Illinois) contains a 3-degree-of-freedom (3 DOF) digital performance simulation (DPS) and the software to execute the algorithmic, trajectory management portion of the flight test management expert system. The LISP processor and LX board communicate using shared direct memory access in the Explorer. The MASSCOMP contains a 6-degree-of-freedom (6 DOF) simulation of the aircraft and the trajectory controller. The two computers communicate using IEEE 802.3/Ethernet with TCP/IP.

Simulation Validation System

The configuration of the simulation validation system is shown in Fig. 16. This system is used by the FTE to evaluate flight plans developed on the FTE workstation, to provide detailed pilot-in-the-loop mission briefing and familiarization, and as a validation facility for testing the ATMS as well as the ground and aircraft systems to be used in the actual flight testing.

The simulation validation configuration of the ATMS includes three computers: the TI Explorer LX, a GOULD SEL 32/27 (Gould Inc., Fort Lauderdale, Florida), and a GOULD SEL 32/87. The TI Explorer LX in the simulation validation system is configured *identically* to the FTE workstation of the Explorer. The SEL 32/27 (designated the control law computer) contains the trajectory controller software and communicates with the Explorer using TCP/IP. The communication between the SEL 32/27 and the Explorer is *identical* to the communication between the Explorer and the MASSCOMP in the FTE workstation configuration. The SEL 32/87 contains a detailed 6 DOF simulation of the aircraft and also contains detailed models of the downlink and uplink telemetry system. The two SEL computers communicate in engineering units through FORTRAN-named common blocks using a two-port shared memory.

Flight System

The configuration of the ATMS flight system is shown in Fig. 17. The flight system is used to actually conduct flight test by executing the flight test plan, monitoring the performance of the aircraft, and controlling the aircraft in flight.

The flight system configuration of the ATMS includes three computers: the TI Explorer LX and two GOULD SEL 32/27s. The TI Explorer LX in the flight system is configured *identically* to the FTE workstation and simulation validation system configurations of this computer. The SEL 32/27 control law computer contains the trajectory controller software and communicates with the Explorer using TCP/IP. The communication between the control law computer and the Explorer is *identical* to the communication between the control law computer and the Explorer in the simulation validation system configuration. A second SEL 32/27 (designated the engineering units computer) is included in the flight system and provides the processing required for the uplink and downlink telemetry systems. The communication between the two SEL computers is *identical* to the communication between the two SEL computers in the simulation validation configuration. In the flight system, the simulation models of the aircraft and telemetry systems are replaced with actual systems.

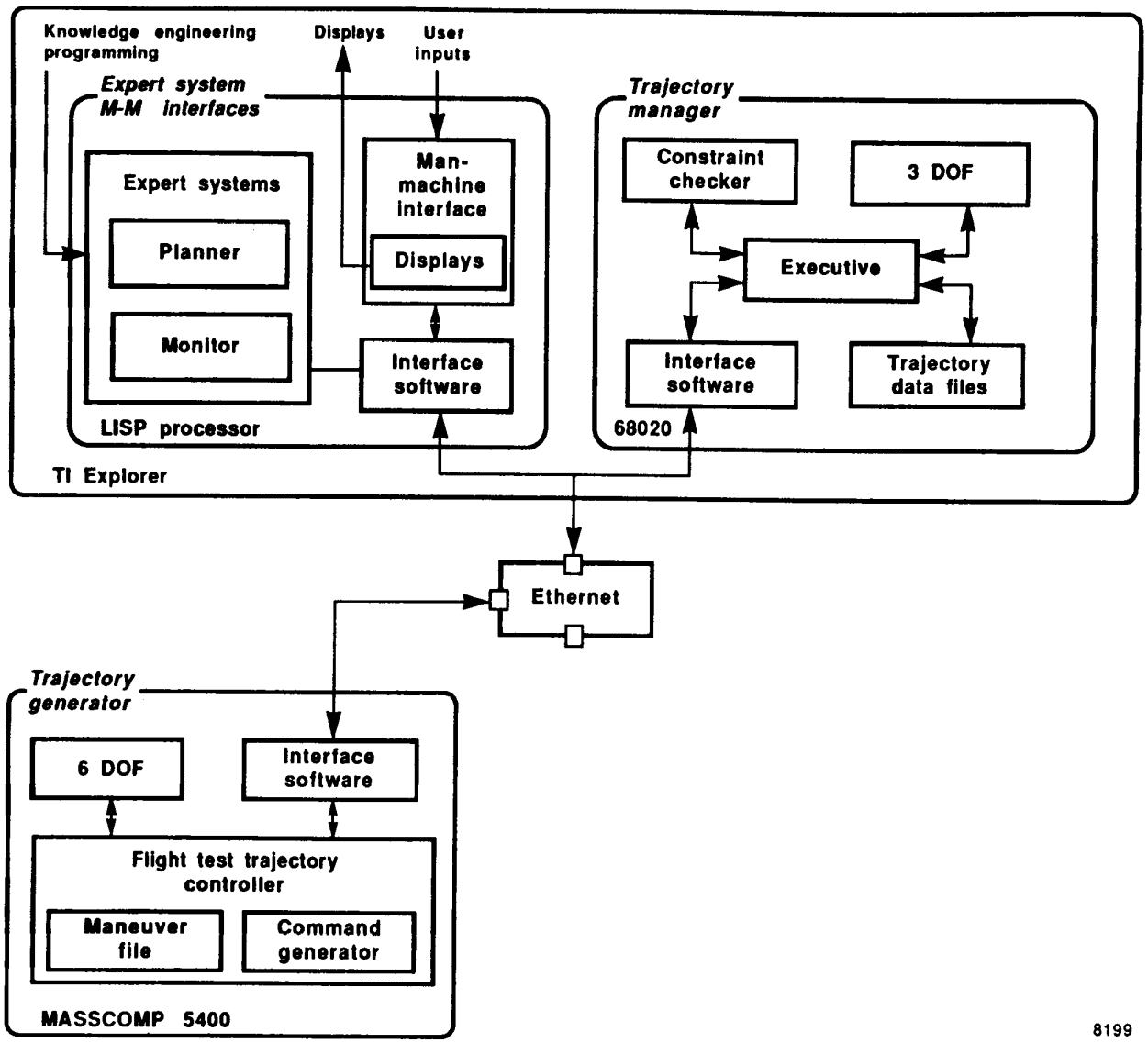

Fig. 15 System configuration for FTE workstation.

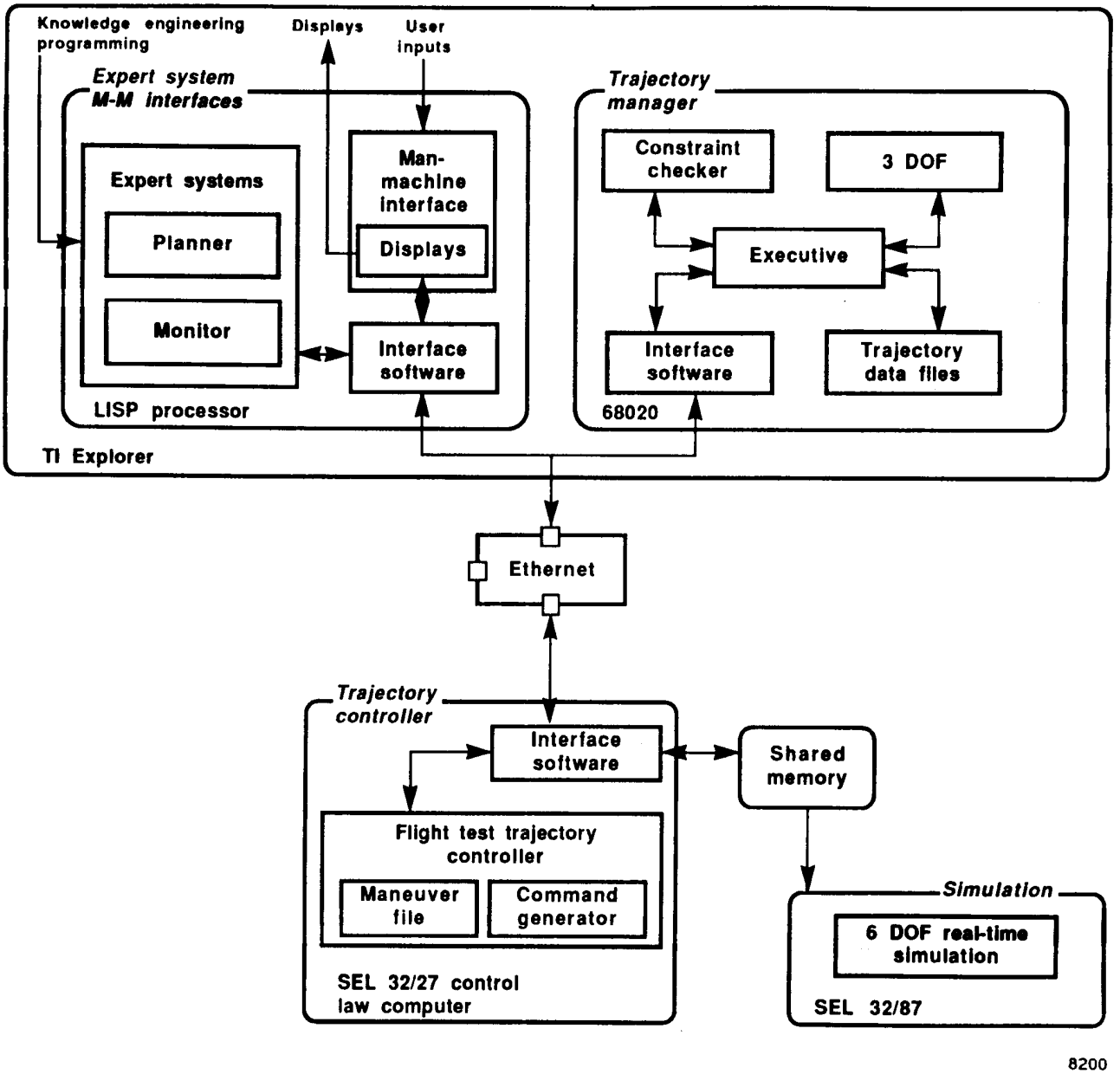

Fig. 16 System configuration for simulation validation system.

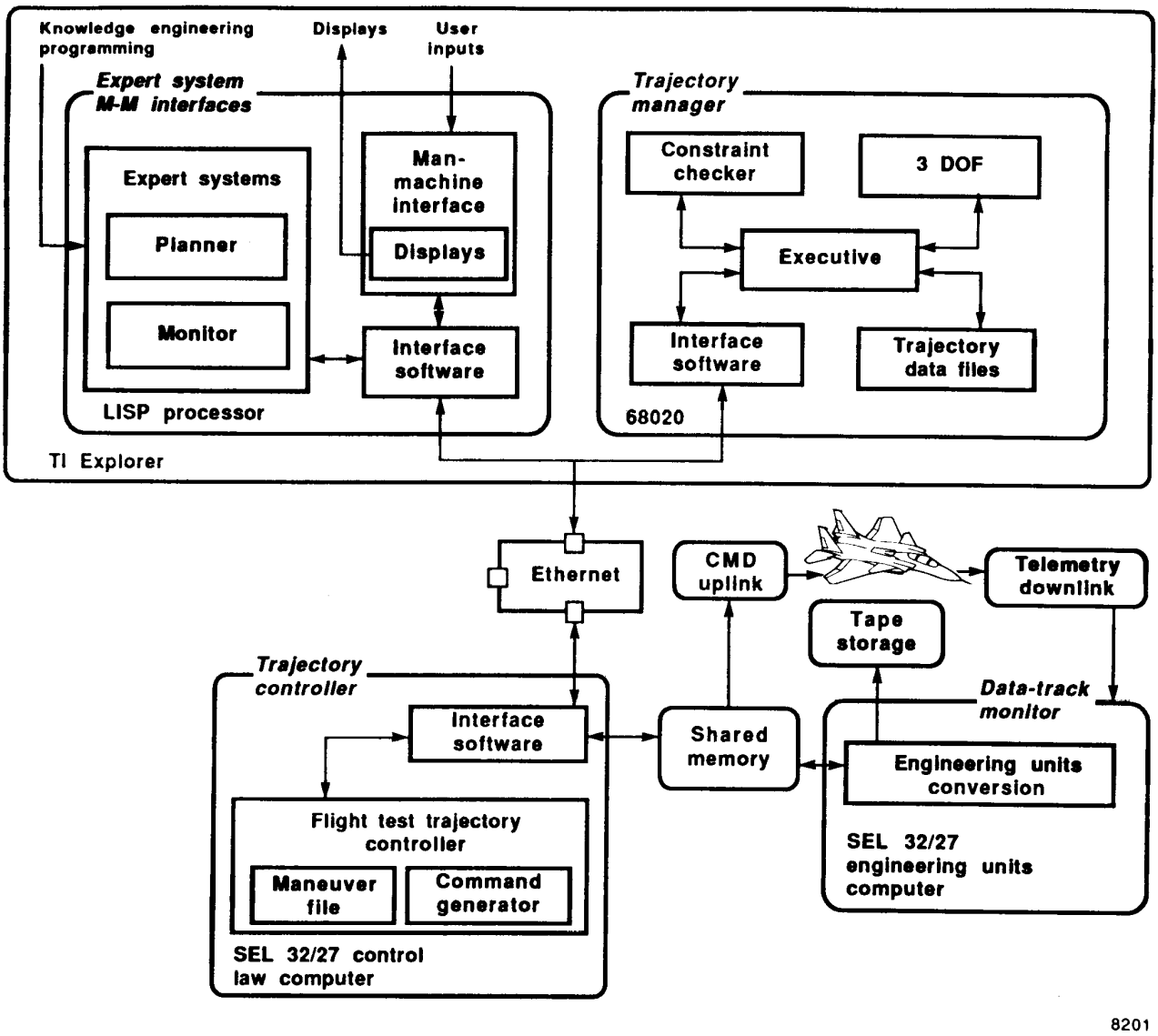

Fig. 17 System configuration for flight system.

Use of the ATMS in the Development of the Rapid-Prototyping Facility

The rapid-prototyping facility for flight research in AI-based flight systems concepts is a multiple-dissimilar computer, distributed-processing system that includes a specially modified flight research aircraft. This facility is an extension of the RAV facility and is designed to provide a flexible testbed for a variety of experiments. The basis of AI capability within this facility is IEEE 802.3/Ethernet with a standard protocol (TCP/IP) as the facility interface.

Structuring the configurations of the ATMS to use identical subsystems and interfaces was motivated by three goals:

1. minimizing development cost and schedule,
2. supporting the incremental buildup of facility capabilities, and
3. aiding the verification and validation process

The ATMS is being used to develop the rapid-prototyping facility in several ways. First, the ATMS brings together a variety of computers using the IEEE 802.3/Ethernet interface. Second, by having incrementally more complex configurations, the ATMS provides an organized and manageable buildup of capabilities and facility complexity. The final contribution of the ATMS in the development of this facility is in the validation, through flight research, of the capabilities of the facility.

Concluding Remarks

The automated flight test management system (ATMS) and its use in the development of a rapid-prototyping flight research facility for AI-based flight systems concepts are described. This flight research facility is being developed at Ames-Dryden to provide early flight assessment of emerging artificial intelligence technology.

The rapid-prototyping facility for flight research in AI-based flight systems concepts is a multiple-computer, distributed-processing system that includes a specially modified flight research aircraft. This facility is an extension of the RAV facility and is designed to provide a flexible testbed for a variety of experiments. The basis of AI capability within this facility is IEEE 802.3/Ethernet with a standard protocol as the facility interface.

The ATMS has been used to develop this facility in several ways. First, the ATMS brings together a variety of computers using the IEEE 802.3/Ethernet interface. Second, by having incrementally more complex configurations, the ATMS provides an organized and manageable buildup of capabilities and facility complexity. The final contribution of the ATMS in the development of this facility is in the validation, through flight research, of facility capabilities.

References

Brahney, J.H.: "Exploring the Unknown With Unmanned Aircraft." *Aerospace Engineering*, vol. 6, no. 1, 1986, pp. 22–27.

Duke, E.L.; Swann, M.R.; Enevoldson, E.K.; and Wolf, T.D.: " Experience With Flight Test Trajectory Guidance." *Journal of Guidance, Control, and Dynamics*, vol. 6, no. 5, 1983, pp. 393–398.

Duke, E.L.; Jones, F.P.; and Roncoli, R.B.: *Development and Flight Test of an Experimental Maneuver Autopilot for a Highly Maneuverable Aircraft.* NASA TP-2618, 1986a.

Duke, E.L.; Regenie V.A.; and Deets, D.A.: *Rapid Prototyping Facility for Flight Research in Artificial-Intelligence-Based Flight Systems Concepts.* NASA TM-88268, 1986b.

Evans, M.B.; and Schilling, L.J.: *The Role of Simulation in the Development and Flight Test of the HiMAT Vehicle.* NASA TM-84912, 1984.

Edwards, J.W.; and Deets, D.A.: *Development of a Remote Digital Augmentation System and Application to a Remotely Piloted Research Vehicle.* NASA TN D-7941, 1975.

Hartman, Gary; Stein, Gunter; and Petersen, Kevin: "Flight Data Processing With the F-8 Adaptive Algorithm." AIAA-77-1042, 1977.

Larson, R.R.; Smith, R.E.; and Krambeer K.D.: "Flight-Test Results Using Nonlinear Control With the F-8C Digital Fly-By-Wire Aircraft." AIAA-83-2174, 1983.

Menon, P.K.A.; and Walker, R.A.: *Aircraft Flight Test Trajectory Control.* NASA CR-179428, 1988.

Menon, P.K.A.; Badgett, M.E.; and Walker, R.A.: *Nonlinear Maneuver Autopilot for the F-15 Aircraft.* ISI report no. 71, Integrated Systems Inc., Santa Clara, California, Dec. 1985.

Myers, A.F.; and Sheets, S.G.: "Qualification of HiMAT Flight Systems." 7th *Annual Technical Symposium, Association for Unmanned Vehicle Systems Proceedings*, Dayton, Ohio, June 1980.

Myers, A.F.; Earls, M.R.; and Callizo, L.A.: "HiMAT Onboard Flight Computer System Architecture and Qualification." *Journal of Guidance, Control, and Dynamics*, vol. 6, no. 4, 1983, pp. 231–238.

Petersen, K.L.: "Flight Control Systems Development of a Highly Maneuverable Aircraft Technology (HiMAT) Vehicle." AIAA-79-1789, 1979.

Petersen, K.L.: "Flight Experience With a Remotely Augmented Vehicle Test Technique." AIAA-81-2417, 1981.

Reed, R.D.: "RPRVs — The First and Future Flights." *Astronautics and Aeronautics*, vol. 12, Apr. 1974, pp. 26–42.

SPARTA, Inc.: *Study of a National Remote Computational Flight Research Facility.* Final Report, NASA Contract Number NAS2-12211, Volumes 1–5. SPARTA, Inc., Laguna Hills, California, July 1987.

Szalai, K.J.; Felleman, P.G.; Gera, Joseph; and Glover, R.D.: "Design and Test Experience With a Triply Redundant Digital Fly-By-Wire Control System." AIAA-76-1911, 1976.

Szalai, K.J.; Jarvis, C.R.; Krier, G.E.; Megna, V.A.; Brock, L.D.; and O'Donnell, R.N.: *Digital Fly-By-Wire Flight Control Validation Experience.* NASA TM-72860, 1978.

Walker, Robert; and Gupta, Naren: *Flight Test Trajectory Control Analysis.* NASA CR-170395, 1983.

NASA
National Aeronautics and Space Administration

Report Documentation Page

1. Report No.	2. Government Accession No.	3. Recipient's Catalog No.
NASA TM-100435		

4. Title and Subtitle

The Use of an Automated Flight Test Management System in the Development of a Rapid-Prototyping Flight Research Facility

5. Report Date

May 1988

6. Performing Organization Code

7. Author(s)

Eugene L. Duke, Marle D. Hewett, Randal W. Brumbaugh, David M. Tartt, Robert F. Antoniewicz, and Arvind K. Agarwal

8. Performing Organization Report No.

H-1477

10. Work Unit No.

RTOP 505-66-11

9. Performing Organization Name and Address

NASA Ames Research Center
Dryden Flight Research Facility
P.O. Box 273, Edwards, CA 93523-5000

11. Contract or Grant No.

13. Type of Report and Period Covered

Technical Memorandum

12. Sponsoring Agency Name and Address

National Aeronautics and Space Administration
Washington, DC 20546

14. Sponsoring Agency Code

15. Supplementary Notes

Prepared for presentation at the Fourth Conference on Artificial Intelligence Applications, May 4–6, 1988, at Long Beach, California.

16. Abstract

An automated flight test management system (ATMS) and its use to develop a rapid-prototyping flight research facility for artificial intelligence-based flight systems concepts are described. The ATMS provides a flight test engineer with a set of tools that assist in flight planning and simulation. This system will be capable of controlling an aircraft during flight test by performing closed-loop guidance functions, range management, and maneuver-quality monitoring. The rapid-prototyping flight research facility is being developed at the Dryden Flight Research Facility of the NASA Ames Research Center (Ames-Dryden) to provide early flight assessment of emerging artificial intelligence (AI) technology. The facility is being developed as one element of the aircraft automation program which focuses on the qualification and validation of embedded real-time AI-based systems.

17. Key Words (Suggested by Author(s))

Artificial intelligence
Expert systems
Flight test
Real time

18. Distribution Statement

Unclassified — Unlimited

Subject category 62

19. Security Classif. (of this report)	20. Security Classif. (of this page)	21. No. of pages	22. Price
Unclassified	Unclassified	19	A02

NASA FORM 1626 OCT 86

For sale by the National Technical Information Service, Springfield, VA 22161-2171.