NASA Technical Memorandum 100434

Operational Viewpoint of the X-29A Digital Flight Control System

Vince Chacon and David McBride

May 1988

National Aeronautics and
Space Administration

NASA Technical Memorandum 100434

Operational Viewpoint of the X-29A Digital Flight Control System

Vince Chacon and David McBride
Ames Research Center, Dryden Flight Research Facility, Edwards, California

1988

National Aeronautics and
Space Administration
Ames Research Center
Dryden Flight Research Facility
Edwards, California 93523-5000

OPERATIONAL VIEWPOINT OF THE X-29A DIGITAL FLIGHT CONTROL SYSTEM

Vince Chacon and David McBride
NASA Ames Research Center
Dryden Flight Research Facility
Edwards, California

ABSTRACT

In the past few years many flight control systems have been implemented as full-authority, full-time digital systems. The digital design has allowed flight control systems to make use of many enhanced elements that are generally considered too complex to implement in an analog system. Examples of these elements are redundant information exchanged between channels to allow for continued operation after multiple failures and multiple variable gain schedules to optimize control of the aircraft throughout its flight envelope and in all flight modes. The introduction of the digital systems for flight control also created the problem of obtaining information from the system in an understandable and useful format.

This paper presents how we have dealt with the X-29A system during its operations at NASA Ames-Dryden Flight Research Facility. A brief description of the X-29A control system, discussion of the tools that have been developed to aid in daily operations, and the troubleshooting of the aircraft will be included. It also shows how the project has been able to take advantage of the digital system in several other areas.

INTRODUCTION

The X-29A forward-swept-wing (FSW) technology demonstrator entered its flight testing phase at NASA Ames-Dryden Flight Research Facility (ADFRF) on December 14, 1984. The X-29A is an aerodynamically unstable aircraft requiring a highly augmented control system to maintain stable flight. The control system consists of triplex fly-by-wire digital flight control computers (FCC) with a triplex analog backup system. The FCCs obtain inputs from various system sensors and provide outputs to hydraulic actuators. In addition to the aerodynamic instability and the triplex fly-by-wire control system, the X-29A was designed with the following technologies:

- Forward-swept-wing planform
- Tailored composite wing structure
- Variable incidence close-coupled canard
- Multisurface control
- Discrete variable camber

SYSTEM DESCRIPTION

Modes

The control system includes several modes, as summarized in Table 1. Reference 1 contains a detailed description of the control system design. Several of the modes incorporate variable gains based on airspeed, altitude, Mach number and angle of attack to optimize the aircraft's capabilities throughout the flight envelope. Normal mode has three pilot-selectable options. Automatic camber control (ACC) is an option that continuously trims the flaps to maintain optimum performance. Manual camber control (MCC) manually positions the flaps at discrete positions and holds them fixed as long as the canard is operating within its acceptable range. Speed stability is a pilot aid to maintain constant airspeed. Degraded modes are also included to allow the system to remain in normal mode with degraded performance for certain failures.

Normal power approach (PA) mode is usually used during takeoff and landing. Also, during landing the pilot has the option of selecting precision approach control (PAC) mode, which provides an auto throttle system to control airspeed and allows the pilot to control flight path angle with the pitch stick.

Direct electrical link (DEL) mode is a ground operation mode. The name of this mode is misleading because the mode has the capability of stabilizing the aircraft in cases of failures around takeoff and landing. The DEL mode is engaged when there is weight on any wheel.

Analog reversion (AR) mode is a hardware backup mode that is capable of recovering the aircraft from anywhere in the flight envelope. Two sets of gains are available in this mode. Power approach (PA) gains are a fixed set of gains used for takeoff and landing. Up and away (UA) gains are variable gains scheduled with impact pressure.

System

The X-29A was built using off-the-shelf hardware where possible. Many components and subsystems from the F-16, F-5, and many other aircraft were used in the manufacture of the X-29A.

Figure 1 shows the control system components. The canards, flaperons, and strake flaps are utilized for pitch control. The flaperons are also used for roll control and the rudder is utilized for yaw control. Crossfeeds between lateral and directional axes are included in the control laws that coordinate the flaperon and rudder commands.

The flight control system is a triplex digital system with a triplex analog backup system. The airdata sensors, accelerometers, and primary rate gyros are triplex for the digital control system. A backup set of triplex rate gyros and a triplex set of impact pressure sensors are provided for the backup analog control system. The backup rate gyros are used by the digital system in the event of a primary rate gyro failure. The attitude heading reference system (AHRS) and the remotely augmented vehicle (RAV) system are single-string inputs to the control system.

The F-5 control stick has been modified with the addition of a feel system to provide force feedback and triplex linear variable differential transducer (LVDTs) to provide position inputs to the control system. The throttle is the only pilot command that can be operated mechanically. The throttle can be controlled by the flight control computers when the PAC mode is selected.

The control surface actuators for the canards, flaperons and rudder are modified F-16 integrated servo actuators. The strake flap actuators are a new design. All the actuators are powered by a dual hydraulic system.

The digital computer is a derivative of an HDP-5301 processor that has been used on several other programs. Figure 2 shows the digital computer system. Each computer consists of an input/output processor (IOP) and a control law processor (CLP). The IOP performs all the interface functions using fixed-point calculations, and the CLP performs all the control law functions using floating point calculations. Each processor contains 2 k of random access memory (RAM), 14 k of electrically erasable read-only memory (EEROM), and 1 k of common memory for the two processors to communicate with each other.

The IOP interfaces through an ARINC-429 bus to the instrumentation system. Data from any memory location in either processor can be transmitted on the 429 bus. The parameters on the 429 bus are preprogrammed in the software and can be changed easily.

The digital system operates at an 80 Hz minor cycle, but the majority of the computations are run at 40 Hz. The three channels are synchronized at the beginning of each minor cycle. Data is exchanged between channels through an intercom during each cycle. Each channel signal selects the input, performs the control law computations, exchanges the output with the other channels, and verifies that all the outputs are identical. The output commands are then exchanged as analog signals, processed through a hardware midvalue select, and sent to the actuators.

The analog control system inputs and outputs are monitored by the digital system. The analog outputs are also processed through the hardware midvalue select prior to being sent to the actuators.

The flight control system also has many built-in tests (BIT) that are designed to insure the FCC hardware and software are performing properly. These tests are run when the system is powered up and while the system is operating. There are also a set of pilot-initiated built-in tests (IBIT) that check the flight control system sensors, displays, indicators, and actuators.

Data Acquisition System

The X-29A data acquisition system uses both pulse code modulation (PCM) and constant-bandwidth frequency modulation (FM) data encoding. Figure 3 shows a block diagram of the instrumentation system. Because of space constraints on the aircraft, airborne recording is not available. Therefore, telemetry is the only source of data. The digital encoding system consists of five remote PCM units with four of the units operating at 800 frame/sec. Three of the 800 frame/sec units have a length of 64 words/frame and a bit rate of 512 kbits. The other unit has a frame length of 128 words/frame and a bit rate of 1024 kbits. The fifth unit has a frame rate of 25 frames/sec with a frame length of 512 words and a bit rate of 128 kbits. All five units have a word length of 10 bits. The flight control computers output data using an ARINC-429 data bus. The data bus output message contains 64 32-bit words with an update rate of 40 messages/sec. The outputs of the PCM units and the data bus are input to an interleaver unit that merges the data streams and outputs a 399.2 kbits/sec serial PCM stream. The system was designed and implemented to allow five PCM units, ARINC data bus, and interleaver to operate asynchronously.

The PCM output has a mainframe length of 128 10-bit words. The main frame rate is 390 frames/sec, with subframe rates of 195, 97.5, 48.75, and 24.375 frames/sec.

The constant-bandwidth FM system consists of IRIG channels 1A to 10A (deviation limits of ±2000 Hz) for encoding high-response acceleration and vibration data. Channel 21B is used for pilot's voice (hot microphone).

The telemetry transmission system consists of a diplexer, directional coupler, two L-band transmitters, and upper and lower fuselage-mounted antennas. The output of the interleaver modulates one of the transmitters, with the second transmitter modulated by the FM multiplexer. The transmitter outputs are diplexed and routed through the directional coupler to the upper and lower L-band antennas.

FLEXIBILITY AND TESTABILITY

The digital system has proven to be very flexible. Many changes have been implemented since the first flight of the X-29A. Reference 2 contains a de-

tailed description of the modifications accomplished on the X-29A. These changes include a major modification of the control system to allow the aircraft to fly in an expanded flight envelope, the addition of a flight test mode that holds the flaps at a fixed position, and the addition of a remotely augmented vehicle (RAV) system.

The RAV system provides pilot steering aids to optimize maneuver trajectories and the capability to add signals to pilot or surface commands for parameter identification. Because of the three-surface pitch control and the lateral/directional crossfeeds, it was not possible to measure the effectiveness of the individual surfaces without the RAV capability to add inputs to the surface commands.

Other control system changes include modifying the airdata redundancy management, modifying normal mode gains, and refinements in the IBIT.

The time required to design, implement, and install these changes into the aircraft was minimal. But the time to test a change can be very involved and time-consuming. The time from deciding to make a change to actually flying with that change varied from 1 week to 6 months and depended on the possible effects of the change, the magnitude of the change, and the mechanics of how the change was made.

During the normal operation of a research aircraft, many different events occur that require testing the system and data gathering to document the system characteristics. These events include system changes, troubleshooting, system evaluation, and preflight test, all of which require tests on both the aircraft and a hardware-in-the-loop simulation.

TOOLS

It was obvious from past experience that tools were required that could examine the internal workings of the digital system without changing the performance of that system.

Simulator

The hardware-in-the-loop simulation plays a very important role in the daily operation of the X-29A because the aircraft is a research vehicle, and many safety-of-flight decisions are made based on the results of simulaton tests. The simulation was designed to represent the aircraft as much as possible. In addition to modeling the aircraft correctly the simulation was also built to easily test the flight system. Figure 4 presents a block diagram of the simulation.

For the simulation, a breakout panel was built to make available a test point for every connection to the FCCs. This allows easy access to any combination of analog parameters that interface to the FCCs.

The system evaluation unit (SEU), used with the 5301 processor, serves as the interface to the FCC internal workings. The SEU is used to examine memory in the FCCs when the FCC is not running. This unit also monitors the FCC buses and can display the value of a single register. This signal can also be made available as an analog output by attaching a converter internally to the SEU. The SEU also has the capabilty to change memory in the FCCs. This can be accomplished by entering the change manually or loading a change from a cassette tape.

To present information on multiple parameters residing inside the FCCs, the extended aircraft interrogation and display system (XAIDS) was interfaced to the SEU through the RS232 ports that would normally be used as terminal ports. The XAIDS was developed by NASA for use on several aircraft. Reference 3 contains a detailed description of the XAIDS design. The XAIDS has the capability to display parameters in engineering units, perform tests on the data, and display results of the test.

The combination of the SEU and the XAIDS provided the capability to read parameters from the FCC memory when the FCCs are not running or the ARINC-429 bus output when the FCCs are running. Several different types of displays were developed on the XAIDS to allow easy access to the desired data. The capability to change the FCC memory was also developed for the XAIDS. This was necessary to allow the FCCs to be easily loading with test programs that performed specialized functions or changed which parameters would be transmitted on the ARNIC-429 bus. The XAIDS allows changes to be entered manually or loaded from a disk, which is easier to create than a cassette tape.

In order to directly compare test data with expected results, it was necessary to transfer data from the XAIDS to the simulation computer. This was accomplished by adding a 1553 interface to the XAIDS and developing the software to transfer time-correlated data to the simulation computer. Figure 5 contains an overplot of data generated in the simulation computer with FCC data, which has been transfered to the XAIDS through the ARNIC-429 bus, and then to the simulation computer through the 1553 bus.

Aircraft

For the aircraft, a simplfied approach to testing was taken. The flight schedule called for flights on two days each week. Therefore, only limited time was available to work on the aircraft, and the amount of disassembly of the aircraft had to be kept to a minimum. Because of this limitation, only tools that were easy to connect to the aircraft could be used.

All instrumented signals were available from a hangar calibration system. This system displayed all parameters in counts or engineering units. The display was updated approximately once every 2 sec. The hangar calibration system was used to monitor slow-changing parameters such as temperatures and voltages. This system was also used to

monitor static values from active parameters such as surface positions and flight control system sensor inputs.

Breakout boxes were built to allow access to analog signals. This works well when all the signals of interest are located in a couple of connectors; but because of limited space, it is difficult to connect more than three or four breakout boxes at one time. Because of the triplex flight control system, it is often necessary to look at a minimum of three different connectors at one time.

In addition to the space constraints, during troubleshooting problems it became evident that not all the signals of interest are available at connectors. For example, the rate gyro signals are processed through analog notch filters and low-pass filters inside the FCCs. Figure 6 shows the implementation of the filters. The filtering changes the high-frequency content of signal considerably after it is examined at the FCC connector. Therefore, the only place the signal of interest was available was in the digital computer. The SEU had the capability to examine one signal at a time as described previously, but this was not adequate to provide data from multiple channels.

In order to examine data inside the digital computer, a menu-operated personal computer was interfaced to the SEU through the same RS232 ports the XAIDS used in the simulation.

This interface allowed data to be transferred between the FCCs and the personal computer through the SEU. The data can then be manipulated in the personal computer by various programs.

Specific test programs have been written for FCCs that store data from the aircraft for a particular test. The data are then transferred to the personal computer where a spreadsheet program is used to evaluate the data for proper test response. An example of this type of test is the troubleshooting of rate gyro failures during IBIT.

The IBIT is initiated by the pilot, automatically run by the FCCs, and a response of "pass" or "fail" is presented to the pilot. If the IBIT fails a specific test, it is recorded in nonvolatile memory; but no information about the test is saved. Recording the analog signals did not provide the necessary information for troubleshooting because of the FCCs' internal filtering. In order to determine how the rate gyros were responding, a test version of IBIT was written to store the desired values during the test. The program was loaded into the FCCs, the test run, then the FCCs halted, and the data transferred to the personal computer. Figure 7 shows the setup for the test and the output of the spreadsheet program.

Other types of tests also used this method of collecting data out of the digital computer. Acceptance tests that are normally only run in a laboratory were run on the flight control actuators while the actuators were installed in the aircraft. Again, a special test program was written to save all the necessary data while the test is executing. After the test the data are transferred to the personal computer where the results are compared with the acceptable values.

Evaluations of the IBIT tolerances were also made. During this process it was determined that the tolerances were acceptable, but in some cases the nominal value was not correct. These tests were possible because of the capability to reprogram the digital computers with the proper tests.

CONCLUDING REMARKS

The X-29A redundant digital system has allowed increased capability and flexibility of flight control systems. Major changes have been accomplished safely without major impact on the flight program. Also changes that were necessary to continue the flight program have been made in as little as one week.

The digital system also required increasing the capability of the tools used during testing and troubleshooting. These tools were required to obtain and process data from the internal memory of the FCCs. Data can be obtained in real time by utilizing the ARINC 429 bus designed to be easily modified. Data can also be obtained by changing the code in the FCCs to store the required parameters and by dumping the memory to a personal computer after the test is complete. This data can then be reviewed in a more understandable format.

The X-29A program has been very successful. The development of flexible, easy-to-use tools for obtaining and handling data has allowed the project to maintain a highly productive flight rate. These tools allow troubleshooting and investigative-type testing to be accomplished easily without disassembling the aircraft.

REFERENCES

1. Whitaker, A. and Chin, J., "X-29 Digital Flight Control System Design," AGARD-CP-384, Active Control Systems — Review Evaluation and Projections, 1985, pp. 6-1 to 6-13.

2. Chin, J., Chacon, V., and Gera, J., "X-29A Flight Control System Performance During Flight Test," AIAA-87-2878, Sept. 1987.

3. Glover, Richard D., "Design and Initial Application of the Extended Aircraft Interrogation and Display System: Multiprocessing Ground Support Equipment for Digital Flight Systems," NASA TM-86740, 1987.

NOMENCLATURE

ACC	automatic camber control
ADFRF	Ames-Dryden Flight Research Facility
AHRS	attitude heading reference system
AR	analog reversion

BIT	built-in tests
CLP	control law processor
DEL	direct electrical link
EEROM	electrically erasable read-only memory
FCC	flight control computers
FM	frequency modulation
FSW	forward-swept wing
IBIT	initiated built-in tests
IOP	input/output processor
LVDT	linear variable differential transducer
MCC	manual camber control
PA	power approach
PAC	precision approach control
PCM	pulse code modulation
RAM	random access memory
RAV	remotely augmented vehicle
SEU	system evaluation unit
UA	up and away
XAIDS	extended aircraft interrogation and display system

TABLE 1 — X-29A FLIGHT CONTROL MODES

Control modes	Function	Options
normal	normal flight	automatic camber control manual camber control speed stability degraded modes
normal PA	takeoff and landing	
precision approach control	precision landing	
direct electrical link	ground operation	
analog reversion	analog backup	UA gains, PA gains

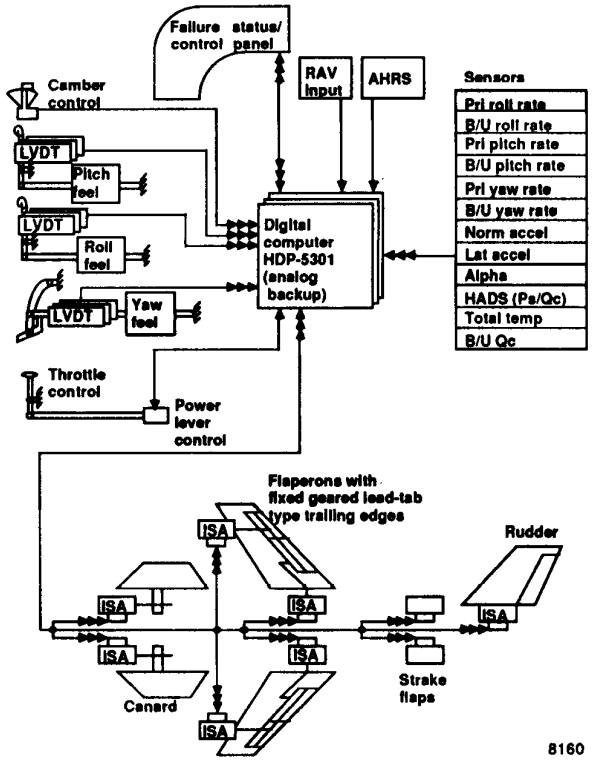

Figure 1. X-29A flight control system hardware.

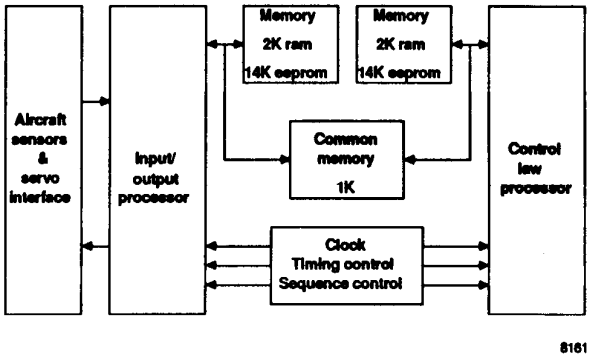

Figure 2. X-29A flight control computer.

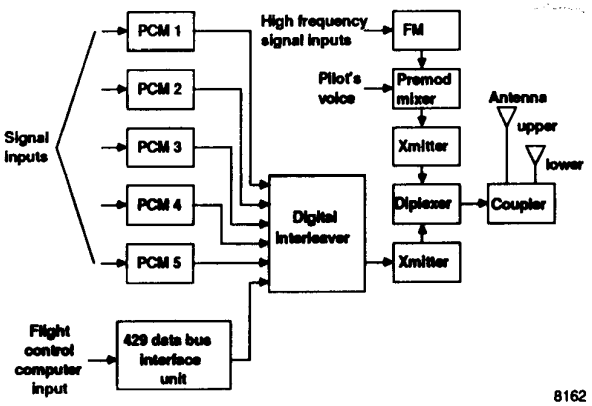

Figure 3. X-29A instrumentation-data system.

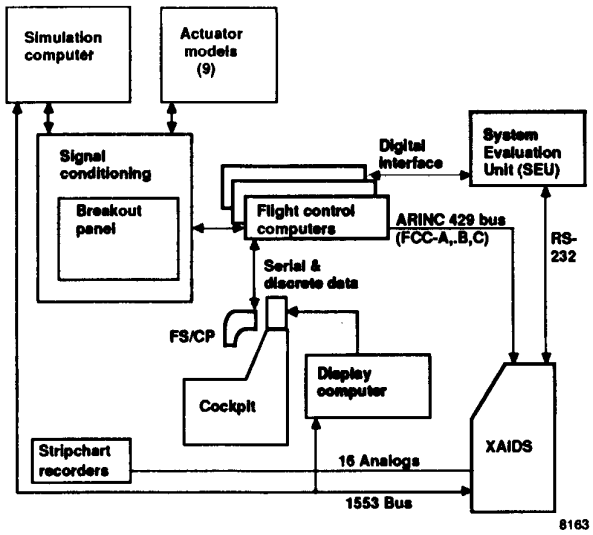

Figure 4. X-29A hardware-in-the-loop simulation.

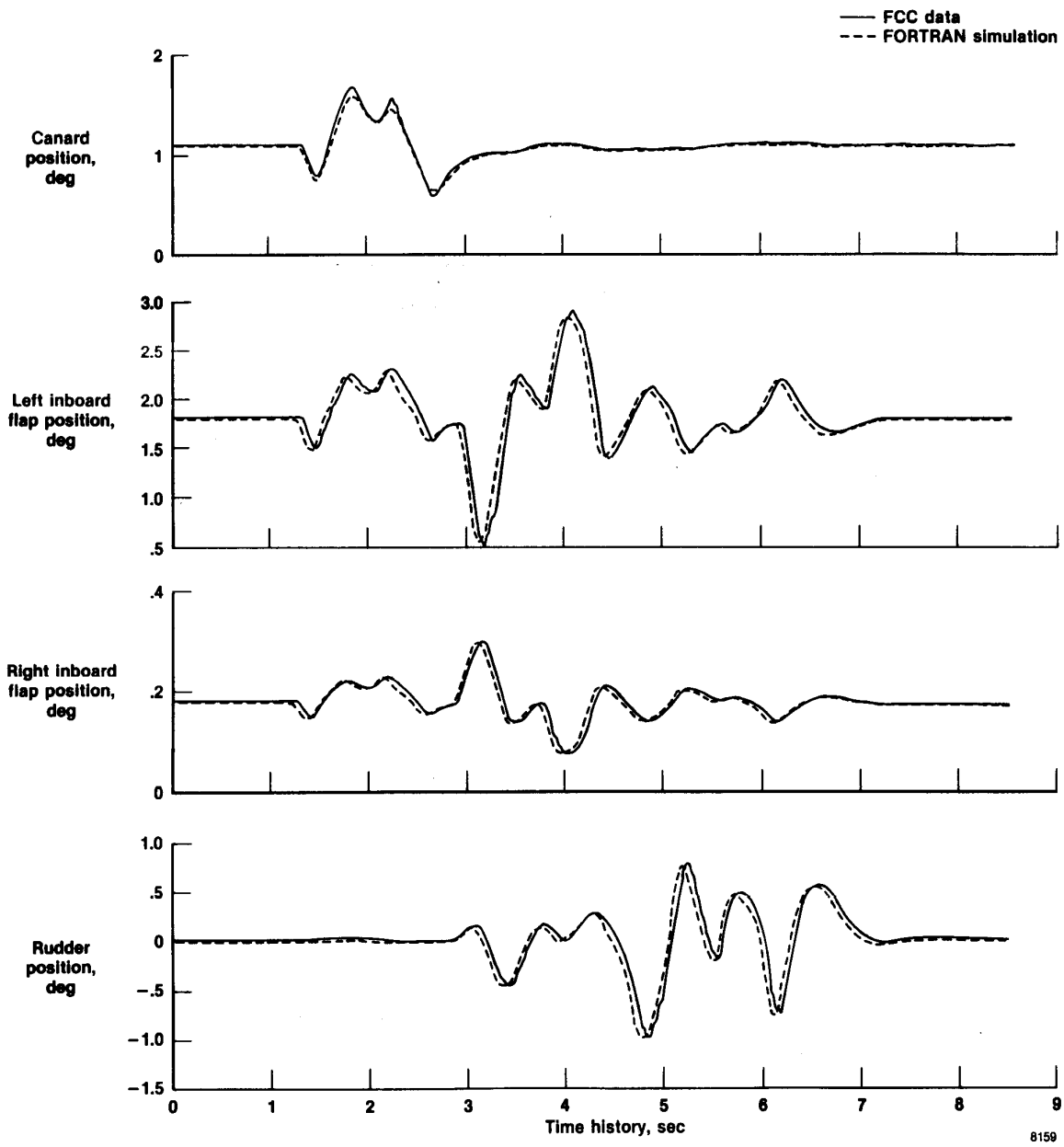

Figure 5. FCC/simulation.

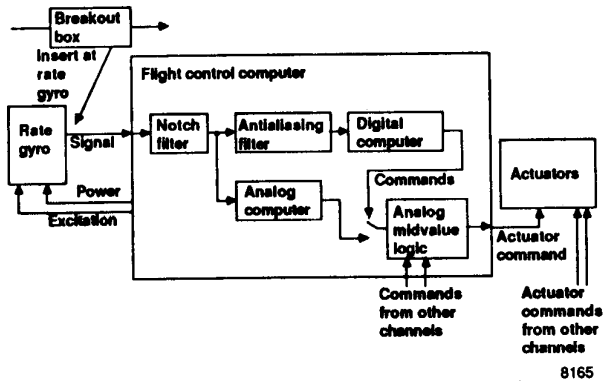

Figure 6. Rate gyro flitering.

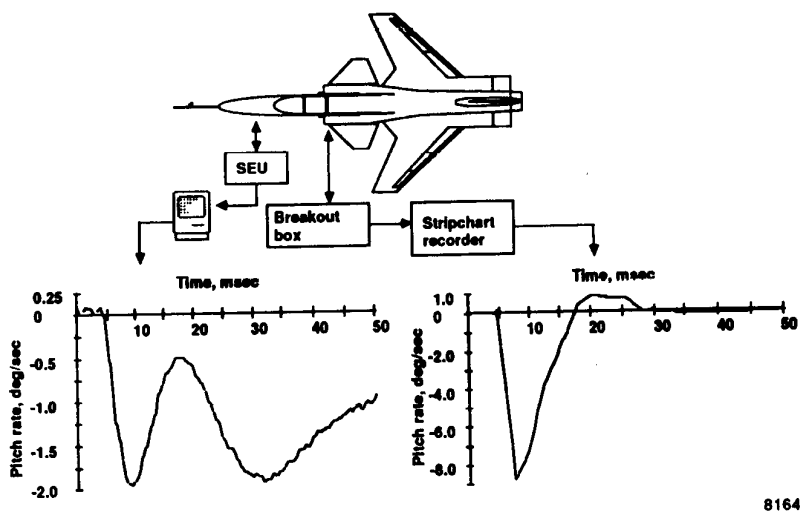

Figure 7. FCC data compared with stripchart data (taken simultaneously).

NASA
National Aeronautics and Space Administration

Report Documentation Page

1. Report No.	2. Government Accession No.	3. Recipient's Catalog No.
NASA TM-100434		

4. Title and Subtitle
Operational Viewpoint of the X-29A Digital Flight Control System

5. Report Date
May 1988

6. Performing Organization Code

7. Author(s)
Vince Chacon and David McBride

8. Performing Organization Report No.
H-1467

10. Work Unit No.
RTOP-533-05-51

9. Performing Organization Name and Address
NASA Ames Research Center
Dryden Flight Research Facility
P.O. Box 273
Edwards, CA 93523-5000

11. Contract or Grant No.

12. Sponsoring Agency Name and Address
National Aeronautics and Space Administration
Washington, DC 20546

13. Type of Report and Period Covered
Technical Memorandum

14. Sponsoring Agency Code

15. Supplementary Notes
Prepared for presentation at the ISA Aerospace Industries/Test Measurement Divisions 34th International Instrumentation Symposium, Albuquerque, New Mexico, May 2-5, 1988.

16. Abstract
In the past few years many flight control systems have been implemented as full-authority, full-time digital systems. The digital design has allowed flight control systems to make use of many enhanced elements that are generally considered too complex to implement in an analog system. Examples of these elements are redundant information exchanged between channels to allow for continued operation after multiple failures and multiple variable gain schedules to optimize control of the aircraft throughout its flight envelope and in all flight modes. The introduction of the digital systems for flight control also created the problem of obtaining information from the system in an understandable and useful format.

This paper presents how we have dealt with the X-29A system during its operations at NASA Ames-Dryden Flight Research Facility. A brief description of the X-29A control system, discussion of the tools that have been developed to aid in daily operations, and the troubleshooting of the aircraft will be included. It also shows how the project has been able to take advantage of the digital system in several other areas.

17. Key Words (Suggested by Author(s))	18. Distribution Statement
Digital flight control operation X-29A Testing	Unclassified — Unlimited Subject category 05

19. Security Classif. (of this report)	20. Security Classif. (of this page)	21. No. of pages	22. Price
Unclassified	Unclassified	09	A02

NASA FORM 1626 OCT 86
*For sale by the National Technical Information Service, Springfield, Virginia 22161.