NASA Technical Memorandum 88270

Analysis Procedures and Subjective Flight Results of a Simulator Validation and Cue Fidelity Experiment

Peter C. Carr and Burnell T. McKissick

July 1988

National Aeronautics and
Space Administration

NASA Technical Memorandum 88270

Analysis Procedures and Subjective Flights Results of a Simulator Validation and Cue Fidelity Experiment

Peter C. Carr
Ames Research Center, Dryden Flight Research Facility, Edwards, California
Burnell T. McKissick
Langley Research Center, Hampton, Virginia

1988

National Aeronautics and
Space Administration
Ames Research Center
Dryden Flight Research Facility
Edwards, California 93523-5000

CONTENTS

	Page No.
SUMMARY	1
INTRODUCTION	1
NOMENCLATURE	2
DESCRIPTION OF EXPERIMENT AND EQUIPMENT	4
TEST PROCEDURE	5
Simulator Test	6
Flight Test	6
PREPARATION OF FLIGHT DATA FOR ANALYSIS	7
Film Scoring	7
Computation of Tracking Parameters	9
RESULTS AND DISCUSSION	11
CONCLUDING REMARKS	12
APPENDIX A — PILOT QUESTIONNAIRE FOR F-14 FLIGHT	13
APPENDIX B — SUMMARY OF PILOT COMMENTS	14
REFERENCES	15
TABLES	16
FIGURES	21

SUMMARY

A joint experiment to investigate simulator validation and cue fidelity was conducted by the Dryden Flight Research Facility of NASA Ames Research Center (Ames-Dryden) and NASA Langley Research Center. The primary objective was to validate the use of a closed-loop pilot-vehicle mathematical model as an analytical tool for optimizing the tradeoff between simulator fidelity requirements and simulator cost. The validation process includes comparing model predictions with simulation and flight test results to evaluate various hypotheses for differences in motion and visual cues and information transfer. A group of five pilots flew air-to-air tracking maneuvers in the Langley differential maneuvering simulator and visual motion simulator and in an F-14 aircraft at Ames-Dryden. The simulators used motion and visual cueing devices including a g-seat, a helmet loader, wide field-of-view horizon, and a motion base platform. The acquisition and preparation of the flight test data for analysis are described. Subjective results of pilot questionnaires obtained from the flight experiment also are presented.

INTRODUCTION

For many years, NASA has been involved in simulator technology, specifically in addressing the issues of simulator design. Two factors that must be considered in simulator design are fidelity and cost. For example, performing desktop calculations results in little fidelity but the cost is low. On the other hand, flight testing provides maximum fidelity but is expensive when highly sophisticated aircraft are used. Various levels of fidelity between that afforded by desktop calculations and by flight test are provided by simulation. In this instance, the level of fidelity is dependent on the complexity of the simulation, which in turn is related to cost. The cost factor raises two important questions: (1) How much fidelity is sufficient, and (2) Can the degree of fidelity be quantified with precision?

NASA Langley Research Center is attempting to answer these questions by sponsoring the development of an analytical closed-loop pilot-vehicle system model of the Langley real-time simulation system (Ashworth and others, 1983; Baron, 1976, 1980; Baron and Kleinman, 1971; Baron and others, 1970; Baron and Muralidharan, 1980; Baron and others, 1978; Baron and others, 1980; Parrish and Ashworth, 1976). This analytical system model combines a multiaxis model of the human pilot with detailed models of the components of a simulator. The system model is used to generate analytical predictions for comparison with the data from an in-simulator experiment. A joint experiment between the Dryden Flight Research Facility of NASA Ames Research Center (Ames-Dryden) and NASA Langley Research Center extends this effort by including flight data as well as simulator data in the comparison. The Ames-Dryden role is to provide the flight data for the experiment and to develop a method for evaluating these data for closed pilot-in-the-loop analysis. The system model can then be used as a tool to analyze both hardware and software design by changing the hardware and software models. The effects of these changes on the task performance provide the quantitative data for the evaluation of tradeoffs between fidelity and cost.

A description of the experiment with emphasis on the acquisition of flight data and the method developed for analyzing flight test data for pilot-in-the-loop

analysis is the scope of this report. A summary of the preliminary subjective results of pilot questionnaires obtained from the flight experiment is also presented.

NOMENCLATURE

A, B, C, D	x-y coordinate points on reticle, mils
ACRFT	aircraft type, field name
av	average
C	calibration marker on frame of 2-sec film segment
DMS	differential maneuvering simulator
DRR	right rudder position, deg
E	end or stop marker on frame of 100-sec film segment
FILMN	film magazine number, field name
FLTN	flight number, field name
FRAMEN	frame sequence number, field name
FREQ	frequency, rad/sec
FRP	film reference point
FSSR	film scoring sample rate, samples/sec
HPT	true altitude, ft
ICODE	identification code, field name
IST	initial start time, HR,MIN,SEC,MSEC
KTLWX	x coordinate of TLWD, field name, counts
KTLWY	y coordinate of TLWD, field name, counts
KPX	x coordinate of PIPD, field name, counts
KPY	y coordinate of PIPD, field name, counts
KTRWX	x coordinate of TRWD, field name, counts
KTRWY	y coordinate of TRWD, field name, counts
KTX	x coordinate of TARGD, field name, counts

KTY	y coordinate of TARGD, field name, counts
OSDM	optical sight drive motor, input signal, volts
MDR	target radial tracking error, mils
MDX	target azimuth tracking error, x coordinate, mils
MDY	target elevation tracking error, y coordinate, mils
PCM	pulse-code modulation
PMDR	pipper radial position from pipper reference, mils
PMDX	pipper azimuth position, x coordinate, mils
PMDY	pipper elevation position, y coordinate, mils
PIPD	pipper image position (displacement) from film reference point, counts
PREFX	pipper azimuth reference, x coordinate, counts
PREFY	pipper elevation reference, y coordinate, counts
PRP	pipper reference point
rad	radian
RANGE	target range, ft
RD	reticle diameter, uncalibrated, counts
RDM	reticle diameter, calibrated, mils
RUNUM	run number, field name
S	start marker on frame
SAS	stability augmentation system
SP	apparent wing span of target aircraft, counts on 100-sec film segment
SPX	apparent wing span of target aircraft, x coordinate, counts
SPY	apparent wing span of target aircraft, y coordinate, counts
SQRT	square root
TARGD	target image position (displacement) from film reference point, counts
TBX	target azimuth bias, x coordinate, counts

TBY	target elevation bias, y coordinate, counts
TLWD	target left wingtip image position (displacement) from film reference point, counts
TRWD	target right wingtip image position (displacement) from film reference point, counts
VMS	visual motion simulator
WGSPN	actual wingspan of target aircraft, ft
x,y	conventional azimuth and elevation axis coordinates, respectively

DESCRIPTION OF EXPERIMENT AND EQUIPMENT

To validate the analytical closed-loop pilot-vehicle system model, mathematical model predictions are compared with simulation and flight test results. Various hypotheses are evaluated to determine differences in pilot performance resulting from motion cues, display cues, and information transfer between simulation and flight. The task designed for this experiment consists of flying air-to-air tracking maneuvers using an F-14 aircraft as the pursuit plane and a T-38 or an F-104 aircraft as the target plane. All maneuvers were performed at an altitude of 10,000 ft while tracking in a 3-g turn or while tracking with wings level. Target range was maintained at approximately 800 ft. The target aircraft was flown in a precise steady-state 3-g turn or in wings-level flight. A controlled disturbance was provided in the optical gunsight display (fig. 1(a)) by moving the reticle (fig. 1(b)) parallel to the vertical (y-xis) direction in response to the sum of 11 generated sine waves (harmonics), with fixed amplitude and random initial phasing between sine waves. Wings-level maneuver provided data to check out the analytical pilot-vehicle mathematical model. The steady-state 3-g maneuver provided the primary data for accomplishing the experimental objectives.

A group of 5 evaluation pilots, consisting of 2 NASA pilots, 2 U.S. Navy pilots, and 1 Grumman Aerospace Corp. pilot, participated in the experiment. Each pilot flew tracking maneuvers in the Langley differential maneuvering simulator (DMS) and visual motion simulator (VMS) (figs. 2 and 3, respectively) and in the F-14 aircraft at Ames-Dryden. The simulators used two mathematical models and motion and visual cueing devices including a g-seat (fig. 4), a helmet loader (fig. 5), a head-up display, and platform motion. These devices are described in Ashworth and Kalhbaum (1973); Ashworth and McKissick (1978); Ashworth and others (1983, 1984); Parrish and others (1973a, 1973b). The F-14 configuration was selected because the aircraft had been used in extensive parameter identification flights during a previous experiment and because the simulator was believed to be highly representative of the actual aircraft throughout the flight envelope. Also, the F-14 aircraft was available as it was based at the Ames-Dryden facilty.

The pursuit or tracking aircraft used for this experiment was the F-14 aircraft, production model 1X (fig. 6). The aircraft was flown with the flight-test nose boom installed and with pitch, roll, and yaw stability augmentation system (SAS) on. A

10-bit data recording system with pulse-code modulation (PCM) was installed in the F-14 aircraft and used to record air data, control input, control surface deflection, and aircraft response parameters. These data were also recorded on magnetic tape aboard the aircraft. Selected parameters were recorded and monitored in real time at the ground station.

The photographic instrumentation used to obtain tracking data consists of a programmable optical gunsight and a high-quality 16-mm movie camera. The optical gunsight and camera is mounted as a single unit above the F-14 cockpit instrumentation panel, as shown in figure 1(a). The camera is activated by the trigger first-detent position on the pilot control stick. A second-detent position on the control stick can be used for simultaneous activation of an event marker on the data system and a light event marker (streak) on the top edge of the camera film. This data event is used in postflight analysis to time correlate film data with PCM data. The movement of the reticle image along the y axis is provided by rotating the combining glass on the optical gunsight by a servomotor drive. The signal that drives the servomotor is produced by a drive electronics package mounted in the rear cockpit and programmed to generate the same drive signal as in the Langley simulators to the sum of 11 sine waves (harmonics) with frequencies and amplitudes as shown in table 1.

The optical gunsight is operated by a power switch, a trim control knob, and a reset switch located above the master generator panel on the pilot's right-hand console, as shown in figure 7(a). The power switch is used to turn on the power to both the optical gunsight and the movie camera. The reset switch is used to activate the drive electronics. When the reset switch is turned on, the combining glass (fig. 1(a)) moves to a reset position with the reticle at a fixed pipper depression angle, as shown in figure 7(b). This depression angle, set at 5° for the experiment, can be varied with the trim control knob. When the reset switch is turned off, the drive electronics are activated to start the reticle oscillating about the pipper depression angle to the sum of the 11 harmonics. Initially, the amplitude of oscillation is very small, ramping in to a maximum amplitude of ±4.5° for 20 sec.

The target plane for the experiment was either a T-38 or an F-104 aircraft. These aircraft did not have flight test instrumentation aboard and were used only to provide a target for the tracking aircraft to provide tracking errors.

TEST PROCEDURE

The experiment was divided into three phases. During the first phase, the pilots flew the tracking maneuvers in the DMS and VMS. For the second phase, the pilots repeated the tracking maneuvers with the F-14 pursuit aircraft at Ames-Dryden. During the third phase, the pilots returned to Langley to fly the tracking maneuvers again in the DMS and VMS. Each pilot was given a questionnaire to be completed after flying the DMS, VMS, and after actual flight. The pilots used the Ames-Dryden developed simulator pilot rating scale (table 2) to evaluate the simulators after all flying was completed (Szalai, 1981). The questionnaire that was used for the in-flight phase is presented in appendix A.

Simulator Test

During simulation, the pilots acquired tracking data in the DMS and VMS with a combination of visual and motion cueing. The configuration test conditions used for these sessions are summarized in table 3. Prior to each simulator session, each pilot was briefed on the type of tracking maneuvers to be flown and cueing devices used. The pilot flew either seven 3-g tracking maneuvers or three wings-level tracking maneuvers at the specified test configuration. The wings-level maneuvers were flown only in the VMS at selected test configurations.

For the 3-g maneuvers using the nonlinear model that had six degrees of freedom, the simulator was initialized at straight-and-level flight from which the pilot started tracking the target with a windup turn to 3 g. After the simulation was stabilized at 3 g for 30 sec, the reticle drive electronics were activated and allowed 20 sec to ramp in. Data were simultaneously recorded while the pilot continued to track the target for 90 sec. For the 3-g maneuvers with the linear model that had three degrees of freedom, the simulator was initialized to have the pilot start tracking in a 3-g turn. After the simulation was stabilized at 3 g for 20 sec, the reticle drive electronics were activated and allowed 20 sec to ramp in. The pilot continued to track the target for 90 sec as the data were being recorded. Wings-level maneuvers were flown by having the pilot stabilize the simulation in straight and level flight for 10 sec before activating the reticle drive electronics. After the drive electronics were allowed 20 sec to ramp in, data were simultaneously recorded while the pilot continued to track the target for 90 sec.

Flight Test

During the flight test phase of the experiment, each pilot flew two flights in the F-14 aircraft to acquire a total of 10 data tracking maneuvers (3 maneuvers with wings level and 7 maneuvers at 3 g). During each flight, five film magazines to film the maneuvers were carried aboard the aircraft. Thus the number of data maneuvers per flight was limited to five (one tracking maneuver per magazine). The pilot flew three wings-level and two 3-g tracking maneuvers during the first flight. For the second flight, the pilot flew five 3-g tracking maneuvers. Prior to flying the first tracking maneuver for data film recording, the pilot flew a minimum of two practice maneuvers.

The pilot flew the tracking maneuver by first establishing the target range at the flight condition and checking that the reticle drive electronics were in reset mode. The pilot then notified the ground station which film magazine number would be used to film the maneuver and verified that the correct depression angle was set on the optical sight. A short film burst (2 sec) was made to obtain a reticle calibration. The pilot notified the ground station when he activated the reticle drive electronics and began tracking the target. To allow the drive electronics to fully ramp in, filming of the maneuver did not start until the ground station notified the pilot that 20 sec had elapsed. The pilot depressed the trigger first-detent position on the control stick to operate the camera while continuing to track the target for 100 sec. While tracking, the pilot depressed the trigger second-detent position for 2 sec to activate the data event and film light event at two designated times specified from the ground station. The pilot terminated the maneuver after notification from the ground station that 100 sec had elapsed.

PREPARATION OF FLIGHT DATA FOR ANALYSIS

Figure 8 is a flow diagram of the preparation of the flight data for analysis. The raw flight data were obtained during flight from two sources, the movie film and a PCM flight tape. The PCM data were reduced to provide control inputs, control surface deflections, corrected aircraft response parameters, air data, and engine parameters; these data were then stored in a PCM data file at a rate of 50 samples/sec. The film data were reduced to provide azimuth and elevation tracking errors, target range, and pipper position along the y axis; these data were stored in a tracking data file at a rate of 12 samples/sec. Both PCM and tracking data files were then time-correlated and merged into a single file at a rate of 12 samples/sec (Maine, 1981). This combined data file was used to generate digital listings and time history sets for quick analysis. The data were also stored on a disk pack at Ames-Dryden for in-house follow-on analysis and on magnetic tape. The magnetic tape was sent to Langley. The procedure developed for scoring the film and for computing the tracking and PCM data to create a combined data file was essential for correlating simulator and flight test pilot tracking performance. This is the first time that tracking data from gunsight camera film was scored and combined with PCM parameters in this manner at Ames-Dryden.

Film Scoring

All movie film was scored at the U.S. Air Force film reading facility at Edwards Air Force Base. Ames-Dryden received the raw data on computer cards. The data were further processed with an in-house computer program to compute the tracking parameters.

For film scoring, the film image is projected on a large screen which has movable horizontal and verticle crosshairs. The lens of the projection system allows the entire film image, including the film sprocket holes, to be projected on the screen. Figure 9 shows a typical film frame with the reticle, pipper, target aircraft, film reference point (FRP), scoring axes (x, y), and basic scoring parameters. The scoring parameters, measured in counts, are the image positions or displacements from the film reference point for the pipper (PIPD), the target (TARGD), the target left wingtip (TLWD), and the target right wingtip (TRWD).

The movie camera is mounted on its side in the aircraft so that the camera y axis or elevation is oriented along the frame width and the x axis or azimuth is oriented along the frame height. The frame, as shown in figure 9, has been rotated 90° to position the positive x axis to the right and the positive y axis upward. The film motion is such that the frame advances along the positive x axis. During the tracking run, the reticle and the target aircraft image move on the frame as the film is advanced. The reticle moves up and down along the y axis over approximately 50 percent of the frame, while the target image moves about the pipper of the reticle as the reticle moves up and down the frame. The crosshairs can be positioned at any point on the screen, and the x and y coordinates can be read out in counts from a specified film reference point.

The film for each tracking run consists of two time segments: a 2-sec segment of filming the reticle in a fixed position and a 100-sec segment of filming the

target aircraft during the tracking run. The 2-sec segment is used for establishing a pipper reference point and reticle calibration. The 100-sec segment is used for obtaining the tracking errors, pipper position, and target range. The film is marked to aid the technician in scoring the film. The letter C is marked on a frame in the 2-sec segment to denote where the film is to be read for calibration. The letters S and E are marked in the 100-sec segment to denote where the film scoring is to be started and ended.

After the film is loaded on the projector and focused to provide the best image, the scoring technician calibrates the film by advancing the film to the frame with the C marker in the 2-sec segment. The crosshairs are placed over the film reference point (fig. 9) and the coordinates are zeroed. (All film readings are scored in terms of x and y coordinates in units of counts in relation to this film reference point.) On the frame following that marked with C for calibration, the crosshairs are placed on 60 mils at point A, 60 mils at point C along the x axis, on the pipper at point B, and on 60 mils at point D along the y axis. The x and y coordinates are recorded at each point, as indicated in figure 9. The process is repeated twice with the film advanced one frame each time. This completes the film calibration.

The film is than advanced to the S-marked frame in the 100-sec segment. The first frame to be scored is the one immediately following the S-marked frame. The pipper and target are scored for this frame and every alternate frame thereafter until the end or E-marked frame. In addition, the left and right wingtips of the target aircraft are scored for the first frame after the S-marked frame and every twenty-fourth frame thereafter to the E-marked frame. For scoring of the target, the crosshairs are positioned at a point midway between the tail engines (fig. 9). If the target has a single engine, the crosshairs are placed over the center of the engine exhaust area. If the target is in a nose-high attitude in which the nose could be seen (such as in a high-g turn), the target is scored by placing the crosshairs over a midfuselage point along a line between the nosetip and the tail engine.

Before being received by Ames-Dryden, all data were recorded on magnetic tape and transferred to computer cards in the format shown in table 4. In addition to the basic scoring parameters, secondary parameters were recorded to identify the specific tracking run. These secondary parameters include identification of aircraft type, flight number, film magazine number, run number, and frame sequence number. The frame sequence number is assigned a zero for the first scored frame and is incremented sequentially throughout the run. The identification code is used to indicate whether the data are for calibration, whether the quality of the data was bad or good, and whether the film light event marker was on or off. The film light event marker is indicated by a thin light streak at the top edge of the frame and is used to show when the pilot has activated the data event marker using the trigger second-detent position on the control stick. The only secondary parameters that change during the run are the identification code and the frame sequence number; the others remain constant.

A portion of the scored film data for a typical tracking run is presented in table 5. The namelist parameters at the top of the tabulation are inputs for computing the primary tracking parameters and are discussed in the next section. The data are tabulated in counts and are presented in the format shown in table 4. The first two segments, marked a and g at the bottom of table 5, are the x- and

y-coordinate readings for the pipper position (PIPD); the next two segments, marked c and d, are the x- and y-coordinate readings for the target position (TARGD); these four segments are tabulated every other frame. The segments marked e and f in table 5 are the x- and y-coordinate readings for the left wingtip (TLWD), while segments g and h are the respective readings for the right wingtip (TRWD); these last four segments are tabulated every twenty-fourth frame. (For this tracking run, the wingtip coordinates were not recorded for the first frame.) The segment marked i in table 5 indicates that the film light event was off during this portion of the scored data. Segment j denotes that the aircraft type was the F-14, segment k denotes that the flight number was 564, segment l denotes that the film magazine number was 1, segment m denotes that the tracking run number was 4, and segment n denotes that the frame sequence number for this portion of the scored data ranged from 0 to 120.

Computation of Tracking Parameters

The first step in computing the tracking parameters is to determine the reticle calibration and the pipper reference point. The x and y coordinates at points A, B, C, and D on the reticle where the data are read from the three frames following the C-marked frame on the 2-sec film segment are tabulated in figure 10. The data for each frame are recorded on a single data card and only the x and y coordinates pertinent to the reticle calibration are tabulated. The three sets of readings are averaged with respect to the errors in the reading and the recording of the data. The readings are then summed and averaged to determine the reticle calibration.

The reticle calibration is obtained by determining the ratio of the calibrated reticle diameter RDM to the uncalibrated reticle diameter RD. The RDM is known from the reticle specifications; the RD is calculated using the three radius segments AB, BC, and DB (fig. 10) to average the reticle distortion caused by projection. Thus,

$$0.5RD = ((AXav - BXav) + (BXav - CXav) + (DYav - BYav)) / 3.0 \qquad (1)$$

given that RDM = 120 mils, RD = 2167.8 counts, and the calibration is 0.0553 mils/count.

The pipper reference point is defined by the average of x and y coordinates at point B. Thus, the pipper azimuth reference (on the x coordinate) is

$$PREFX = BXav = 2754.3 \text{ counts},$$

and the pipper elevation reference (on the y coordinate) is

$$PREFY = BYav = 2237.7 \text{ counts}.$$

Figure 11 shows a frame containing the target errors relative to the pipper (MDX, MDY, MDR), the pipper position relative to the pipper reference point (PMDX, PMDY, PMDR), the reticle diameter (RD), the apparent target aircraft wingspan (SP), and pipper reference point (PRP). The pipper position on figure 11 is shown for an arbitrary instant during the tracking run within the 100-sec film segment. Although the pipper is constrained to move parallel to the y axis, the lateral offset of the pipper in relation to the pipper reference point PMDX = 0 is shown offset for illustration purposes only. For purposes of clarity, the reticle and scale are enlarged in figure 11.

The input parameters used for computing the tracking parameters are given in the first two lines of table 5. The initial start time IST is the first time point in which the camera is turned on; the IST is determined from the time correlation between film data and PCM data. The reticle calibration parameters RD, RDM, PREFX, and PREFY are obtained from the reticle calibration. The difference between what the pilot observes and what the camera photographs are the target bias parameters. Both the target azimuth (x coordinate) bias TBX and the target elevation (y coordinate) bias TBY are zero because the optical sight and the camera are mounted on a single mount with an exact alignment.

The tracking errors at a given instant during the run are computed by calculating the relative x and y distances between the target and the pipper, correcting for target bias, and converting the raw units in counts to engineering units in mils. Equations (2) to (4) are used to compute the target tracking error in azimuth (x coordinate) MDX, the target tracking error in elevation (y coordinate) MDY, and for target radial tracking error MDR:

$$MDX = ((KTX - KPX) - TBX) * (RDM / RD) \tag{2}$$

$$MDY = ((KPY - KTY) - TBY) * (RDM / RD) \tag{3}$$

$$MDR = SQRT\ (MDX * MDX + MDY * MDY) \tag{4}$$

where

KTX is x coordinate of target image position (TARGD),

KPX x coordinate of the pipper image position (PIPD),

TBX x coordinate of the target azimuth bias,

KPY y coordinate of the pipper image position (PIPD),

KTY y coordinate of the target image position (TARGD),

TBY y coordinate of the target elevation bias, and

SQRT square root.

The pipper position relative to the pipper reference point at the same instant during the run is computed by calculating the x- and y-coordinate distances between the pipper and pipper reference point and converting the raw units to engineering units. Equations (5) to (7) are used to compute the pipper position in azimuth PMDX, elevation PMDY, and radial PMDR, respectively:

$$PMDX = (KPX - PREFX) * (RDM / RD) \tag{5}$$

$$PMDY = (KPY - PREFY) * (RDM / RD) \tag{6}$$

$$PMDR = SQRT\ (PMDX * PMDX + PMDY * PMDY) \tag{7}$$

An approximate value of the target aircraft range at a rate of 1 sample/sec is computed as follows:

$$RANGE = 0.5 * WGSPN / ((SP/ RD) TAN (0.0005 * RDM)) \quad (8)$$

where WGSPN is the actual wingspan of the target aircraft. The parameter SP is the apparent wingspan of the target aircraft, obtained by calculating the apparent x- and y-coordinate lengths between the target aircraft left and right wingtips and computing the resultant of these lengths. Equations (9) to (11) are used to perform this operation:

$$SPX = KTRWX - KTLWX \quad (9)$$

$$SPY = KTLWY - KTRWY \quad (10)$$

$$SP = SQRT (SPX * SPX + SPY * SPY) \quad (11)$$

where KTLWX and KTLWY are the field names for the x and y coordinates, respectively, of the target left wingtip image position. Similarly, KTRWX and KTRWY are the respective field names for the right wingtip image position.

Table 6 shows a partial tabulation of the computed tracking parameters for a typical tracking run. The data are presented at 12 samples/sec for the tracking errors (MDX, MDY, and MDR), SP/RD ratio, target range and pipper positions (PMDX, PMDY, and PMDR). The target range is zero for the first second because no target wingtip data were recorded for the first frame. Also, PMDX is very close to zero, and the pipper motion is primarily along the y axis as desired.

RESULTS AND DISCUSSION

Figure 12 presents a flight time history of a 3-g tracking maneuver and is an example of the data used for analysis. In figure 12(a), the pipper motion (PMDY) provided by the movement of the combining glass was nearly identical to the input signal from the optical sight drive motor (OSDM). As indicated in figure 12(b), although the pipper was driven along the y axis in pitch, the pilot used longitudinal and lateral stick and occasionally rudder pedals to track the target. This resulted in tracking errors in both azimuth (MDX) and elevation (MDY) in figure 12(a). The pilot was given the option of using the rudder pedals to aid in tracking. Specific pilot comments on the use of rudder pedals when tracking in flight are summarized in appendix B.

For this particular run, 42 sec after the maneuver began, the pilot allowed the target range to slowly increase to approximately 3300 ft. Also, the computed target range during the first second of the maneuver was set to zero because no data was obtained to compute this parameter for this period of the run.

Although quantitative and complete results of this experiment are not within the scope of this report, the flight data are available for follow-on analysis by calculating the mean and standard deviations for selected aircraft and tracking parameters. The quantitative results can be used for comparison with results from the pilot-vehicle system model predictions for the F-14 airplane.

Each pilot was given a questionnaire to complete after flying the Langley DMS and VMS simulators and the F-14 aircraft at Ames-Dryden. A summary of pilot comments is given in appendix B.

In general, lateral-directional sluggishness was not a problem when the pilots flew the F-14 aircraft, although one pilot commented that the aircraft was slightly sluggish in the lateral axis. The pilots commented that the major difficulty in tracking was due to turbulence caused by flying into the target aircraft wake. Specifically, they commented that difficulties in tracking with wings level were caused by dutch-roll dynamics and wake encounters especially behind the F-104 target aircraft. One pilot commented that the target wake was encountered only once during the tracking at 3 g. The pilots generally favored the use of rudder pedal inputs while tracking. Specific comments indicated that some pilots used no rudder pedal inputs, some used rudder pedals only while tracking with wings level, and some used rudder pedals only to make small corrections while tracking. Some pilots believed that the best tracking occurred when rudder pedal input was used only for lateral-directional error corrections; other pilots indicated that tracking would be impossible without rudder pedal input.

CONCLUDING REMARKS

The Dryden Flight Research Facility of NASA Ames Research Center (Ames-Dryden) and NASA Langley Research Center conducted a joint experiment to investigate simulation validation cue fidelity. The primary contribution of Ames-Dryden was the development of a method for analyzing flight data for closed pilot-in-the-loop analysis. This method consists of scoring and digitizing raw data from film obtained with an optical gunsight and a high-quality 16 mm movie camera. These raw data were used to compute basic tracking parameters and were merged with pulse-code modulation data to create a single data file — the first time a combined data file was created in this manner at Ames-Dryden. Although the data will be used primarily for comparison with results from the pilot-vehicle model predictions, the flight data constitute a valuable data base for the determination of pilot models in a real flight environment.

APPENDIX A — PILOT QUESTIONNAIRE FOR F-14 FLIGHT

1. Mark the level of difficulty you had in keeping the pipper on the target during the task.

2. In which axis did the difficulties occur? Check the appropriate reasons:

Longitudinal axis
- Longitudinal-control
- Short-period dynamics
- Time-delay response (for example, sluggishness)

Lateral axis
- Lateral-directional control
- Dutch-roll dynamics
- Adverse yaw
- Wing rock
- Time-delay response

3. Did you use the rudder pedals to help you perform the tracking task?

4. Rank the following parameters in terms of their importance in providing information for the tracking task.

Normal acceleration
Lateral acceleration
Aircraft roll, pitch, and yaw rates
Rotational accelerations in roll, pitch, and yaw
Longitudinal acceleration

5. Were there any other factors that you believe were important in performing the tasks but that were not covered in this questionnaire?

APPENDIX B — SUMMARY OF PILOT COMMENTS

Difficulties in keeping the pipper on the target during the tracking task were caused by dutch-roll dynamics and encounters with the target aircraft wake. The F-14 aircraft is usually somewhat sluggish in the lateral axis.

Wake turbulence from the F-104 target aircraft was encountered while tracking with the wings level at 200 knots indicated airspeed; this made tracking difficult.

Lateral-directional control and adverse yaw caused difficulties in keeping the pipper on the target while tracking.

There seemed to be a problem with the pipper driving to the top of the head-up display and limiting on the upper stop.

Because of jet wake, especially behind the F-104 target aircraft, the tracking task with wings level was difficult to perform. Jet wake was encountered only once when tracking at 3 g.

No inherent aircraft factors were noted which effected the performance of the F-14 aircraft. However, the data obtained when tracking with wings level at 200 KIAS was heavily contaminated by wake encounters from the F-104 target aircraft.

Used rudder pedals during tracking.

Used rudder pedals for small corrections.

Did not use rudder pedals during tracking.

Used rudder pedals for fine tracking.

Did not use rudder pedals while tracking.

REFERENCES

Ashworth, B.R.; and Kalhbaum, W.M., Jr.: Description and Performance of the Langley Differential Maneuvering Simulator. NASA TN D-7304, 1973.

Ashworth, B.R.; and McKissick, B.T.: The Effect of Helmet Loader G-Cueing on Pilot's Simulator Performance. AIAA-78-1573, 1978.

Ashworth, B.R.; McKissick, B.T.; and Parrish, R.V.: Effect of Motion Base and G-Seat Cueing on Simulation Pilot Performance. NASA TP-2247, 1984.

Baron, Sheldon: A Model for Human Control and Monitoring Based an Modern Control Theory. J. Cybern. & Inf. Sci., vol. 1, no. 1, Spring 1976, pp. 3-18.

Baron, Sheldon: A Multi-Cue OCM for Analysis of Simulator Configurations. NASA CR-166040, 1980.

Baron, Sheldon; and Kleinman, D.L.: Manned Vehicle Systems Analysis by Means of Modern Control Theory. NASA CR-1753, 1971.

Baron, Sheldon; Kleinman, D.L.; and Levison, W.H.: An Optimal Control Model of Human Response — Theory and Validation. Automatica, vol. 6, no. 3, May 1970, pp. 357-369.

Baron, Sheldon; and Muralidharan, Ramal: The Analysis of Some Flight Control Simulator Characteristics Using a Closed-Loop Pilot Vehicle Model. NASA CR-166039, 1980.

Baron, Sheldon; Muralidharan, Ramal; and Kleinman, David: Closed Loop Models for Analyzing the Effects of Simulator Characteristics — Pilot Performance/Workload Prediction. AIAA-78-1592, 1978.

Baron, Sheldon; Muralidharan, Ramal; and Kleinman, David: Closed Loop Models for Analyzing Engineering Requirements for Simulators. NASA CR-2965, 1980.

Maine, R.E.: User's Manual for SYNC: A FORTRAN Program for Merging and Time-Synchronizing Data. NASA TM-81355, 1981.

Parrish, R.V.; and Ashworth, B.R.: The Effect of Digital Computing on the Performance of a Closed-Loop Control-Loading System. NASA TN D-8371, 1976.

Parrish, R.V.; Dieudonne, J.E.; Bowles, R.L.; and Martin, D.J., Jr.: Coordinated Adaptive Washout for Motion Simulators. AIAA-73-930, 1973a.

Parrish, R.V.; Dieudonne, J.E.; Martin, D.J., Jr.; and Copeland, J.L.: Compensation Based on Linearized Analysis for a Six Degree of Freedom Motion Simulator. NASA TN D-7349, 1973b.

Parrish, R.V.: McKissick, B.T.; and Ashworth, B.R.: Comparison of Simulations Fidelity Model Predictions With In-Simulator Evaluation Data. NASA TP-2106, 1983.

Szalai, K.J.: Validation of a General Purpose Airborne Simulator for Simulation of Large Transport Aircraft Handling Qualities. NASA TN D-6431, 1981.

TABLE 1. — FREQUENCY AND AMPLITUDE OF GENERATED SINE WAVES

Frequency, rad	Harmonics	Relative amplitude
0.147	2	1.17000
0.442	6	0.72600
0.957	13	0.29300
1.399	19	0.12700
1.988	27	0.07530
2.798	38	0.04570
3.976	54	0.02760
5.670	77	0.01630
7.952	108	0.00955
10.971	149	0.00592
15.978	217	0.00359

TABLE 2. — SIMULATOR PILOT RATING SCALE

Rating	Adjective	Description
	Category:	Satisfactory representation of actual vehicle
1	Excellent	Virtually no discrepancies: simulator reproduces actual vehicle characteristics to the best of my memory. Simulator results directly applicable to actual vehicle with high degree of confidence.
2	Good	Very minor discrepancies. The simulator comes close to duplicating actual vehicle characteristics. Simulator results in most areas would be applicable to actual vehicle with confidence.
3	Fair	Simulator is representative of actual vehicle. Some minor discrepanices are noticeable but not distracting enough to mask primary characteristics. Simulator trends could be applied to actual vehicle.
	Category:	Unsatisfactory representation of actual vehicle
4	Poor	Simulator needs work. It has many minor discrepancies which are annoying. Simulator would need some improvement before applying results directly to actual vehicle but is useful for general handling-qualities investigations for this class of aircraft.
5	Bad	Simulator not representative. Discrepancies exist which prevent actual vehicle characteristics from being recognized. Results obtained here should be considered as unreliable.
6	Very bad	Possible simulator malfunction. Wrong sign, inoperative controls, other gross discrepancies prevent comparison from even being attempted. No data.

Table 2 taken from Szalai (1981).

TABLE 3. — SIMULATOR CONFIGURATION TEST MATRIX

DMS, six-degree-of-freedom nonlinear model, narrow field of view
- No cues
- G-seat only
- Helmet loader only
- G-seat and helmet loader

DMS, six-degree-of-freedom nonlinear model, wide field of view
- No cues
- G-seat only
- Helmet loader only
- G-seat and helmet loader

DMS, three-degree-of-freedom linear model, narrow field of view
- No cues

DMS, three-degree-of-freedom linear model, wide field of view
- No cues

VMS, six-degree-of-freedom nonlinear model, narrow field of view
- No cues
- G-seat only
- Platform motion only
- G-seat and platform motion

TABLE 4. — FORMAT FOR RECORDING SCORED FILM DATA

Field name	Card column	FORTRAN data format
KPX	11-15	F5.0
KPY	16-20	F5.0
KTX	21-25	F5.0
KTY	26-30	F5.0
KTLWX	31-35	F5.0
KTLWY	36-40	F5.0
KTRWX	41-45	F5.0
KTRWY	46-50	F5.0
ICODE	56-57	I2
= 01 reticle calibration		
= 02 frame cannot be scored		
= 03 film light event-off		
= 04 film light event-on		
ACRFT	59-61	I3
FLTN	62-64	A3
FILMN	65-66	I2
RUNUM	67-68	I2
FRAMEN	69-73	I5

TABLE 5.—TABULATION OF SCORED FILM DATA

```
$NAM1 IST=13,40,12,457, RD=2167.8, RDM=120.00, TBX=00.00, TBY=00.00,
 PREFX=2754.3, PREFY=2237.7, GCFR=12.0, WGSPN=25.2 $END
          2750 2614 2628 2592 0000 0000 0000 0000      3 014564010400000
          2757 2612 2647 2601 0000 0000 0000 0000      3 014564010400002
          2768 2621 2673 2617 0000 0000 0000 0000      3 014564010400004
          2756 2620 2671 2610 0000 0000 0000 0000      3 014564010400006
          2749 2639 2684 2627 0000 0000 0000 0000      3 014564010400008
          2758 2653 2699 2633 0000 0000 0000 0000      3 014564010400010
          2745 2674 2687 2640 0000 0000 0000 0000      3 014564010400012
          2748 2689 2685 2651 0000 0000 0000 0000      3 014564010400014
          2761 2707 2691 2649 0000 0000 0000 0000      3 014564010400016
          2744 2719 2674 2636 0000 0000 0000 0000      3 014564010400018
          2755 2753 2670 2673 0000 0000 0000 0000      3 014564010400020
          2760 2773 2659 2683 0000 0000 0000 0000      3 014564010400022
          2764 2792 2653 2706 2524 2707 2801 2707      3 014564010400024
          2755 2814 2634 2736 0000 0000 0000 0000      3 014564010400026
          2764 2836 2639 2758 0000 0000 0000 0000      3 014564010400028
          2764 2849 2636 2768 0000 0000 0000 0000      3 014564010400030
          2750 2868 2615 2791 0000 0000 0000 0000      3 014564010400032
          2757 2907 2627 2818 0000 0000 0000 0000      3 014564010400034
          2756 2893 2631 2816 0000 0000 0000 0000      3 014564010400036
          2750 2930 2626 2826 0000 0000 0000 0000      3 014564010400038
          2764 2954 2650 2854 0000 0000 0000 0000      3 014564010400040
          2747 2963 2643 2848 0000 0000 0000 0000      3 014564010400042
          2746 2987 2648 2869 0000 0000 0000 0000      3 014564010400044
          2763 2971 2669 2848 0000 0000 0000 0000      3 014564010400046
          2749 3075 2664 2876 2542 2862 2796 2869      3 014564010400048
          2751 3043 2657 2890 0000 0000 0000 0000      3 014564010400050
          2748 3046 2655 2893 0000 0000 0000 0000      3 014564010400052
          2749 3054 2644 2931 0000 0000 0000 0000      3 014564010400054
          2750 3043 2649 2947 0000 0000 0000 0000      3 014564010400056
          2750 3037 2629 2980 0000 0000 0000 0000      3 014564010400058
          2752 3026 2622 3004 0000 0000 0000 0000      3 014564010400060
          2752 3040 2610 3032 0000 0000 0000 0000      3 014564010400062
          2744 3048 2595 3058 0000 0000 0000 0000      3 014564010400064
          2764 3052 2611 3087 0000 0000 0000 0000      3 014564010400066
          2766 3047 2608 3080 0000 0000 0000 0000      3 014564010400068
          2760 3046 2606 3079 0000 0000 0000 0000      3 014564010400070
          2758 3048 2613 3073 2496 3059 2736 3070      3 014564010400072
          2757 3037 2612 3066 0000 0000 0000 0000      3 014564010400074
          2745 3044 2622 3062 0000 0000 0000 0000      3 014564010400076
          2752 3014 2626 3027 0000 0000 0000 0000      3 014564010400078
          2757 3036 2656 3051 0000 0000 0000 0000      3 014564010400080
          2756 3005 2653 3028 0000 0000 0000 0000      3 014564010400082
          2747 2991 2670 3011 0000 0000 0000 0000      3 014564010400084
          2751 2985 2681 3019 0000 0000 0000 0000      3 014564010400086
          2752 2978 2692 3016 0000 0000 0000 0000      3 014564010400088
          2754 2982 2703 3018 0000 0000 0000 0000      3 014564010400090
          2754 2972 2710 3007 0000 0000 0000 0000      3 014564010400092
          2747 2963 2706 2997 0000 0000 0000 0000      3 014564010400094
          2761 2959 2719 2993 2610 2984 2838 2989      3 014564010400096
          2758 2954 2709 2988 0000 0000 0000 0000      3 014564010400098
          2758 2945 2704 2976 0000 0000 0000 0000      3 014564010400100
          2745 2908 2697 2953 0000 0000 0000 0000      3 014564010400102
          2747 2929 2690 2968 0000 0000 0000 0000      3 014564010400104
          2762 2907 2684 2954 0000 0000 0000 0000      3 014564010400106
          2758 2899 2665 2967 0000 0000 0000 0000      3 014564010400108
          2759 2892 2655 2962 0000 0000 0000 0000      3 014564010400110
          2756 2885 2642 2967 0000 0000 0000 0000      3 014564010400112
          2760 2891 2636 2972 0000 0000 0000 0000      3 014564010400114
          2750 2885 2614 2966 0000 0000 0000 0000      3 014564010400116
          2761 2861 2620 2955 0000 0000 0000 0000      3 014564010400118
          2765 2855 2620 2954 2506 2938 2741 2944      3 014564010400120
          | a | b | c | d | e | f | g | h |          |i| j |k|l|m| n |
```

TABLE 6. — TABULATION OF COMPUTED TRACKING PARAMETERS

TIME	MDX	MDY	MDR	SP/RD	RANGE	PMDX	PMDY	PMDR
13 40 12 457	-6.75	-1.22	6.86	.000	0.	-.24	20.83	20.83
13 40 12 540	-6.09	-.61	6.12	.000	0.	.15	20.72	20.72
13 40 12 623	-5.26	-.22	5.26	.000	0.	.76	21.22	21.23
13 40 12 706	-4.71	-.55	4.74	.000	0.	.09	21.16	21.16
13 40 12 790	-3.60	-.66	3.66	.000	0.	-.29	22.21	22.22
13 40 12 873	-3.27	-1.11	3.45	.000	0.	.20	22.99	22.99
13 40 12 956	-3.21	-1.88	3.72	.000	0.	-.51	24.15	24.16
13 40 13 40	-3.49	-2.10	4.07	.000	0.	-.35	24.98	24.98
13 40 13 123	-3.87	-3.21	5.03	.000	0.	.37	25.98	25.98
13 40 13 206	-3.87	-4.59	6.01	.000	0.	-.57	26.64	26.65
13 40 13 290	-4.71	-4.43	6.46	.000	0.	.04	28.52	28.52
13 40 13 373	-5.59	-4.98	7.49	.000	0.	.32	29.63	29.63
13 40 13 456	-6.14	-4.76	7.77	.128	1641.	.54	30.68	30.69
13 40 13 540	-6.70	-4.32	7.97	.128	1641.	.04	31.90	31.90
13 40 13 623	-6.92	-4.32	8.16	.128	1641.	.54	33.12	33.12
13 40 13 706	-7.09	-4.48	8.39	.128	1641.	.54	33.84	33.84
13 40 13 790	-7.47	-4.26	8.60	.128	1641.	-.24	34.89	34.89
13 40 13 873	-7.20	-4.93	8.72	.128	1641.	.15	37.05	37.05
13 40 13 956	-6.92	-4.26	8.13	.128	1641.	.09	36.27	36.27
13 40 14 40	-6.86	-5.76	8.96	.128	1641.	-.24	38.32	38.32
13 40 14 123	-6.31	-5.54	8.39	.128	1641.	.54	39.65	39.65
13 40 14 206	-5.76	-6.37	8.58	.128	1641.	-.40	40.15	40.15
13 40 14 290	-5.42	-6.53	8.49	.128	1641.	-.46	41.48	41.48
13 40 14 373	-5.20	-6.81	8.57	.128	1641.	.48	40.59	40.59
13 40 14 456	-4.71	-11.02	11.98	.117	1789.	-.29	46.35	46.35
13 40 14 540	-5.20	-8.47	9.94	.117	1789.	-.18	44.58	44.58
13 40 14 623	-5.15	-8.47	9.91	.117	1789.	-.35	44.74	44.75
13 40 14 706	-5.81	-6.81	8.95	.117	1789.	-.29	45.19	45.19
13 40 14 790	-5.59	-5.31	7.71	.117	1789.	-.24	44.58	44.58
13 40 14 873	-6.70	-3.16	7.40	.117	1789.	-.24	44.25	44.25
13 40 14 956	-7.20	-1.22	7.30	.117	1789.	-.13	43.64	43.64
13 40 15 40	-7.86	-.44	7.87	.117	1789.	-.13	44.41	44.41
13 40 15 123	-8.25	.55	8.27	.117	1789.	-.57	44.85	44.86
13 40 15 206	-8.47	1.94	8.69	.117	1789.	.54	45.08	45.08
13 40 15 290	-8.75	1.83	8.93	.117	1789.	.65	44.80	44.80
13 40 15 373	-8.52	1.83	8.72	.117	1789.	.32	44.74	44.74
13 40 15 456	-8.03	1.38	8.14	.111	1893.	.20	44.85	44.85
13 40 15 540	-8.03	1.61	8.19	.111	1893.	.15	44.25	44.25
13 40 15 623	-6.81	1.00	6.88	.111	1893.	-.51	44.63	44.64
13 40 15 706	-6.97	.72	7.01	.111	1893.	-.13	42.97	42.97
13 40 15 790	-5.59	.83	5.65	.111	1893.	.15	44.19	44.19
13 40 15 873	-5.70	1.27	5.84	.111	1893.	.09	42.47	42.47
13 40 15 956	-4.26	1.11	4.40	.111	1893.	-.40	41.70	41.70
13 40 16 40	-3.87	1.88	4.31	.111	1893.	-.18	41.37	41.37
13 40 16 123	-3.32	2.10	3.93	.111	1893.	-.13	40.98	40.98
13 40 16 206	-2.82	1.99	3.46	.111	1893.	-.02	41.20	41.20
13 40 16 290	-2.44	1.94	3.11	.111	1893.	-.02	40.65	40.65
13 40 16 373	-2.27	1.88	2.95	.111	1893.	-.40	40.15	40.15
13 40 16 456	-2.32	1.88	2.99	.105	1994.	.37	39.93	39.93
13 40 16 540	-2.71	1.88	3.30	.105	1994.	.20	39.65	39.65
13 40 16 623	-2.99	1.72	3.45	.105	1994.	.20	39.15	39.15
13 40 16 706	-2.66	2.49	3.64	.105	1994.	-.51	37.10	37.11
13 40 16 790	-3.16	2.16	3.82	.105	1994.	-.40	38.27	38.27
13 40 16 873	-4.32	2.60	5.04	.105	1994.	.43	37.05	37.05
13 40 16 956	-5.15	3.76	6.38	.105	1994.	.20	36.61	36.61
13 40 17 40	-5.76	3.87	6.94	.105	1994.	.26	36.22	36.22
13 40 17 123	-6.31	4.54	7.77	.105	1994.	.09	35.83	35.83
13 40 17 206	-6.86	4.48	8.20	.105	1994.	.32	36.16	36.17
13 40 17 290	-7.53	4.48	8.76	.105	1994.	-.24	35.83	35.83
13 40 17 373	-7.81	5.20	9.38	.105	1994.	.37	34.50	34.50

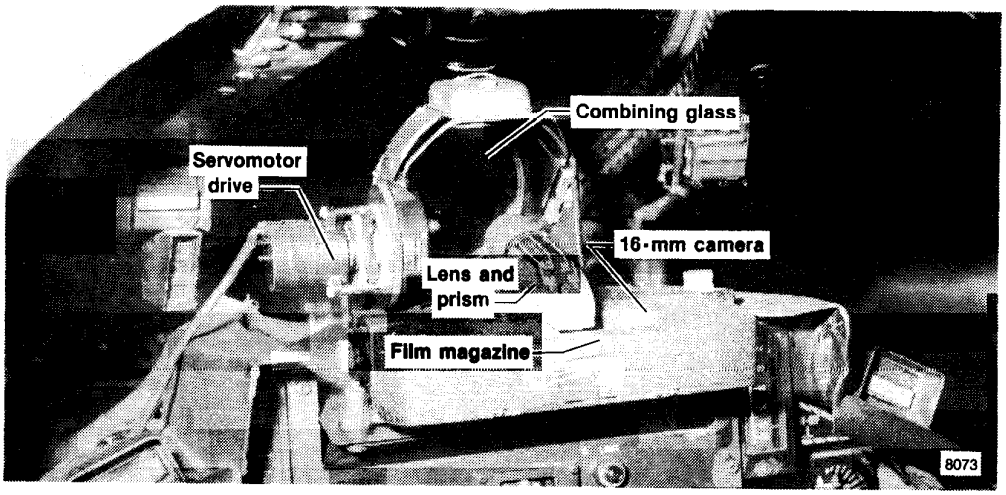

Figure 1(a). Optical gunsight and movie camera mounted in F-14 test aircraft.

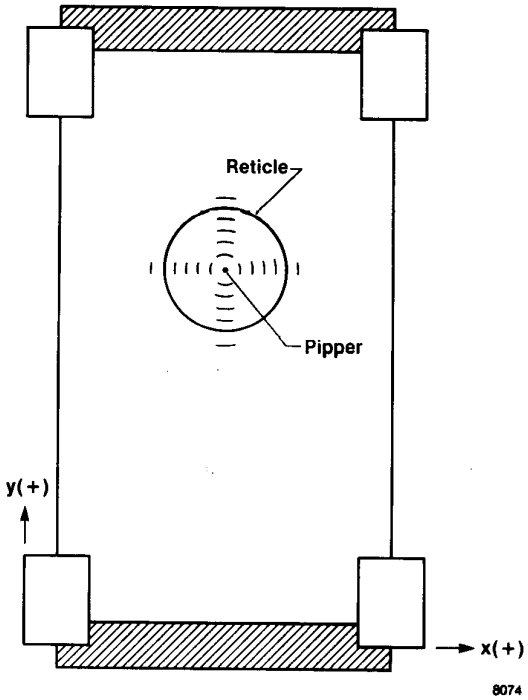

Figure 1(b). Typical frame of movie film showing the reticle as displayed to the pilot.

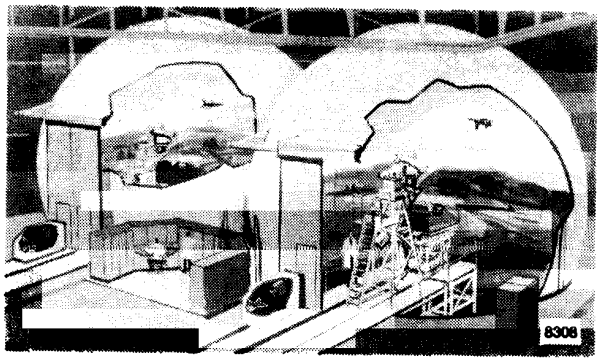

Figure 2. Langley differential maneuvering simulator.

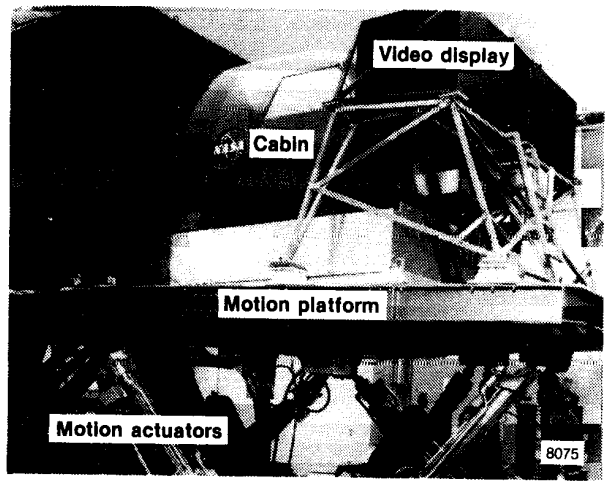

Figure 3. Langley visual motion simulator.

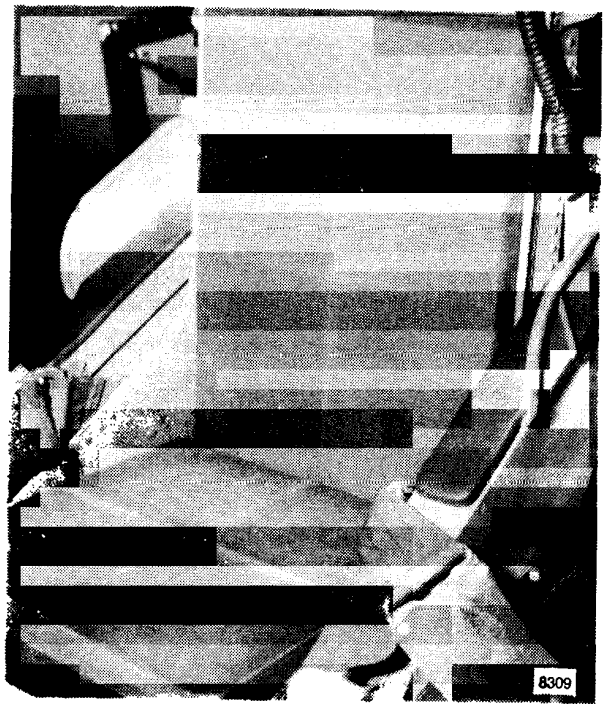

Figure 4(a). A g-seat system.

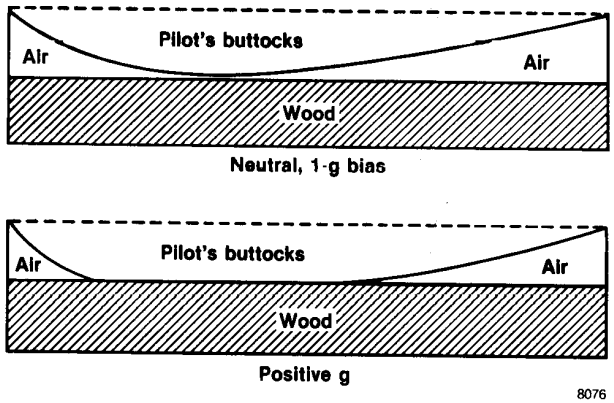

Figure 4(b). Operation of the g seat.

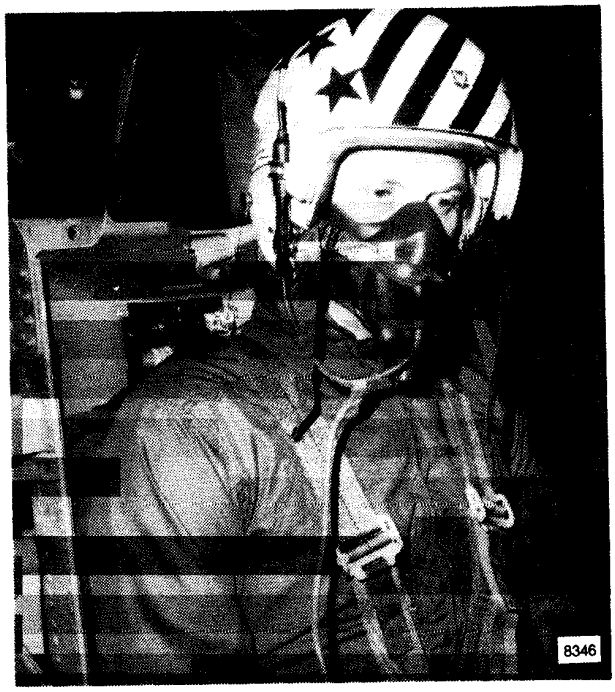

Figure 5. Helmet loader installed in differential maneuvering simulator.

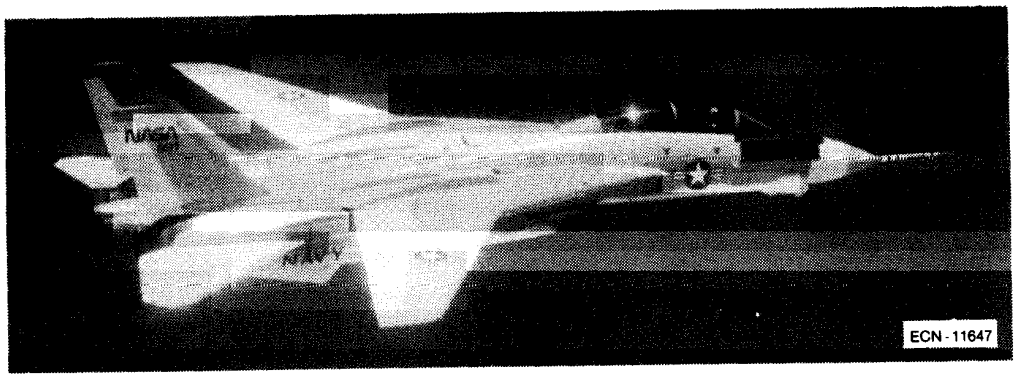

Figure 6. Ames-Dryden F-14 aircraft production model 1X.

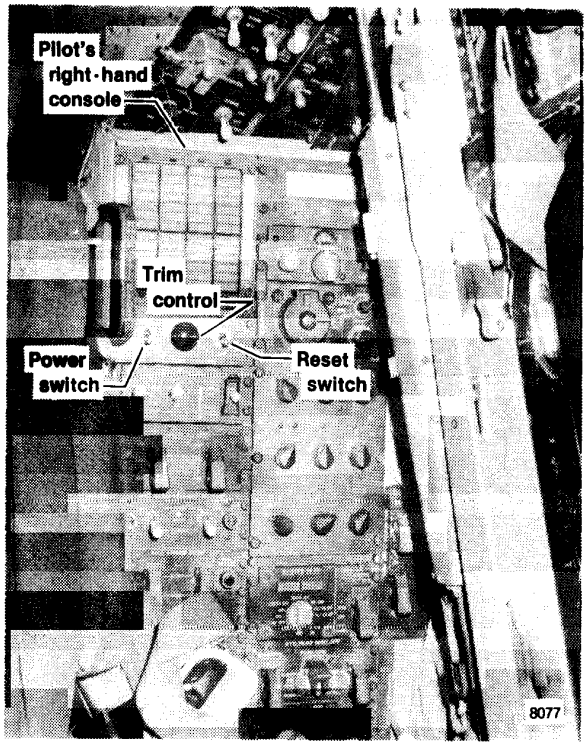

Figure 7(a). Optical gunsight power, trim, and reset controls mounted in pilot's right-hand console above the master generator panel.

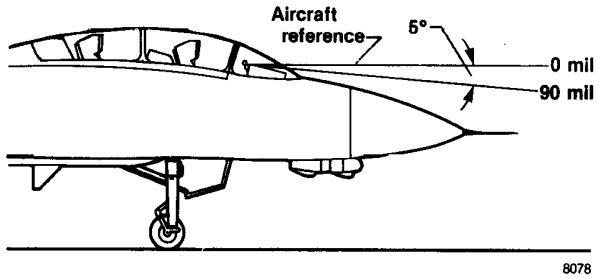

Figure 7(b). Optical gunsight pipper depression angle.

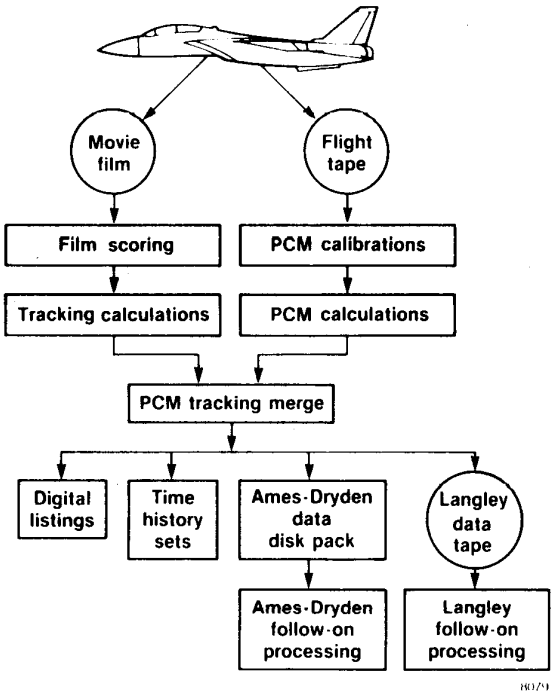

Figure 8. Preparation of flight data for analysis.

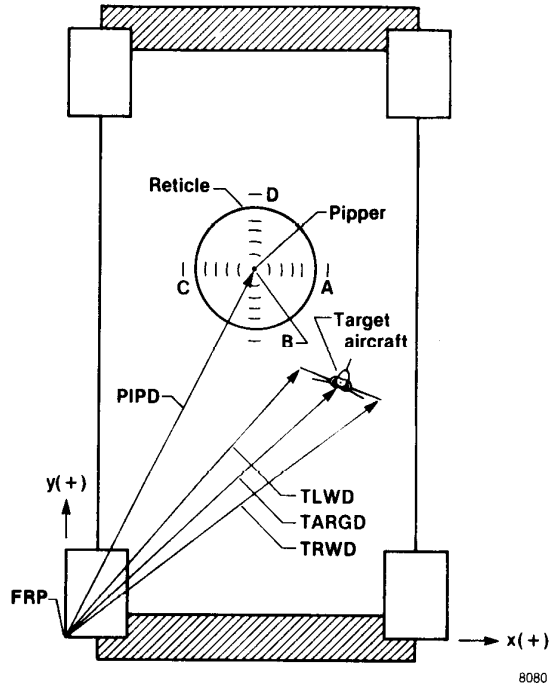

Figure 9. Typical frame of film as seen on screen showing basic scoring parameters.

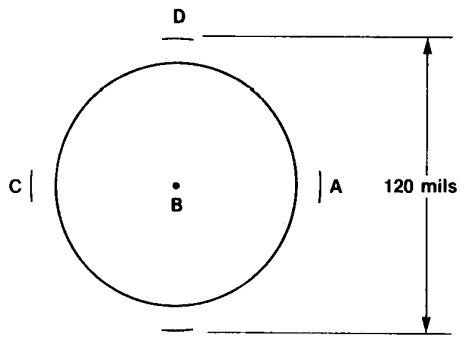

Card number	Ax, counts	Bx, counts	By, counts	Cx, counts	Dy, counts
1	3832.0	2744.0	2227.0	1659.0	3299.0
2	3851.0	2757.0	2245.0	1664.0	3312.0
3	3852.0	2762.0	2241.0	1671.0	3316.0
Total	11535.0	8263.0	6713.0	4994.0	9927.0
Average	3845.0	2754.3	2237.7	1664.7	3309.0

8081

Figure 10. Data for determining pipper calibration and pipper reference point.

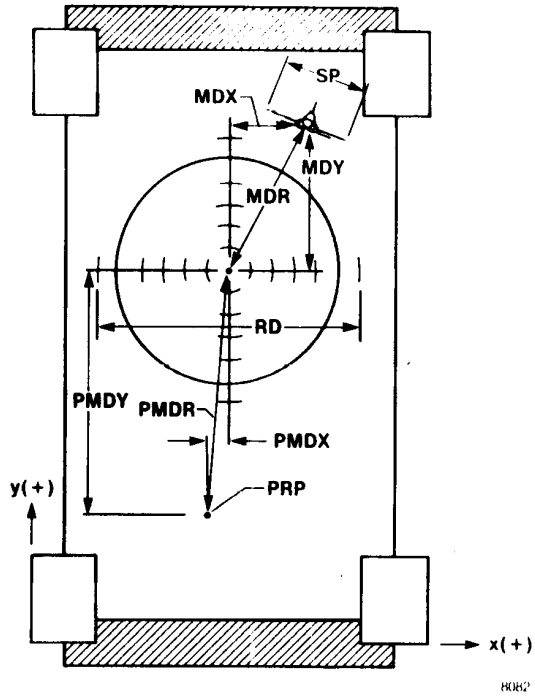

Figure 11. Computed tracking parameters.

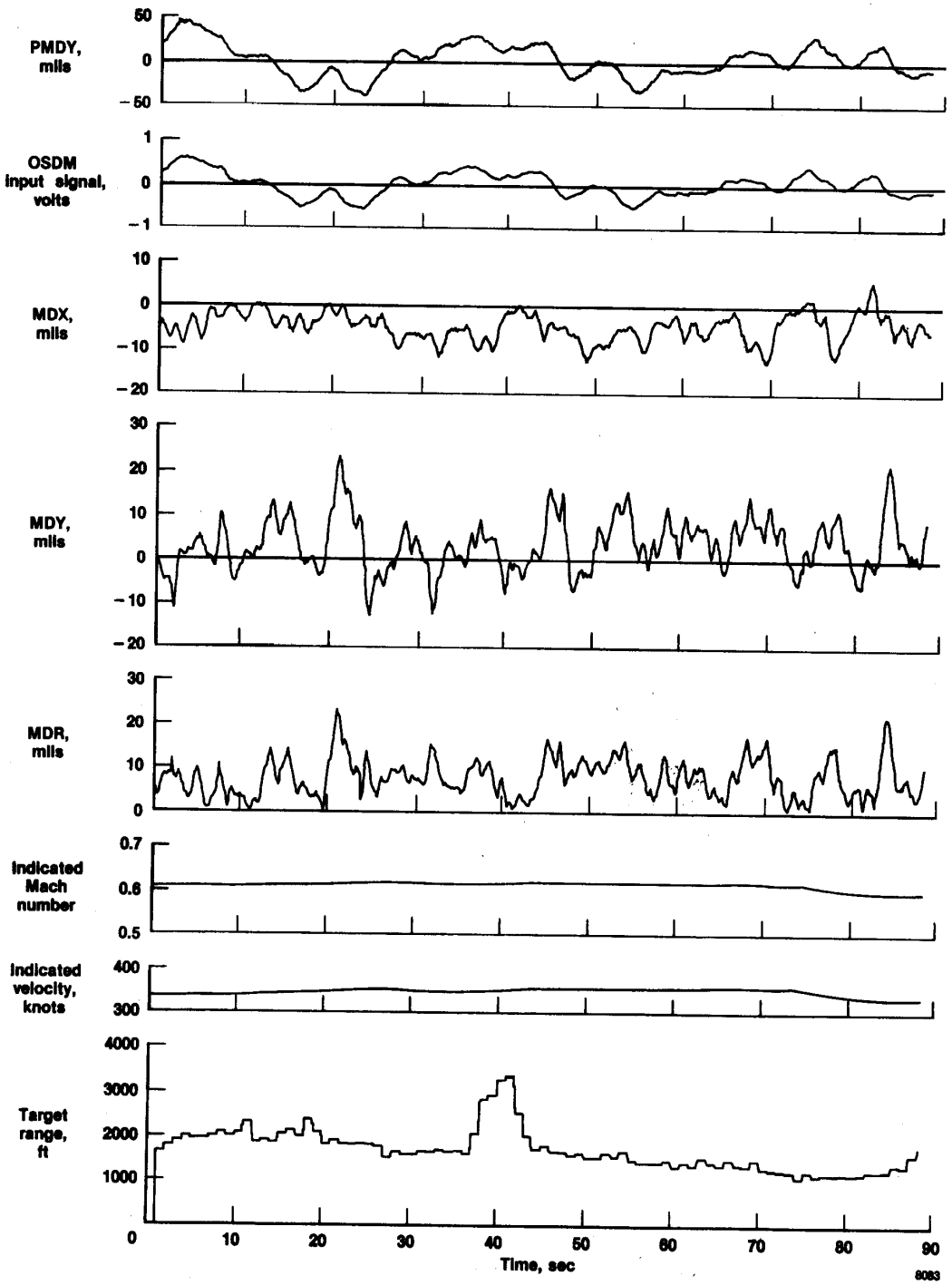

(a) Tracking parameters.

Figure 12. Flight time history of a typical 3-g tracking maneuver.

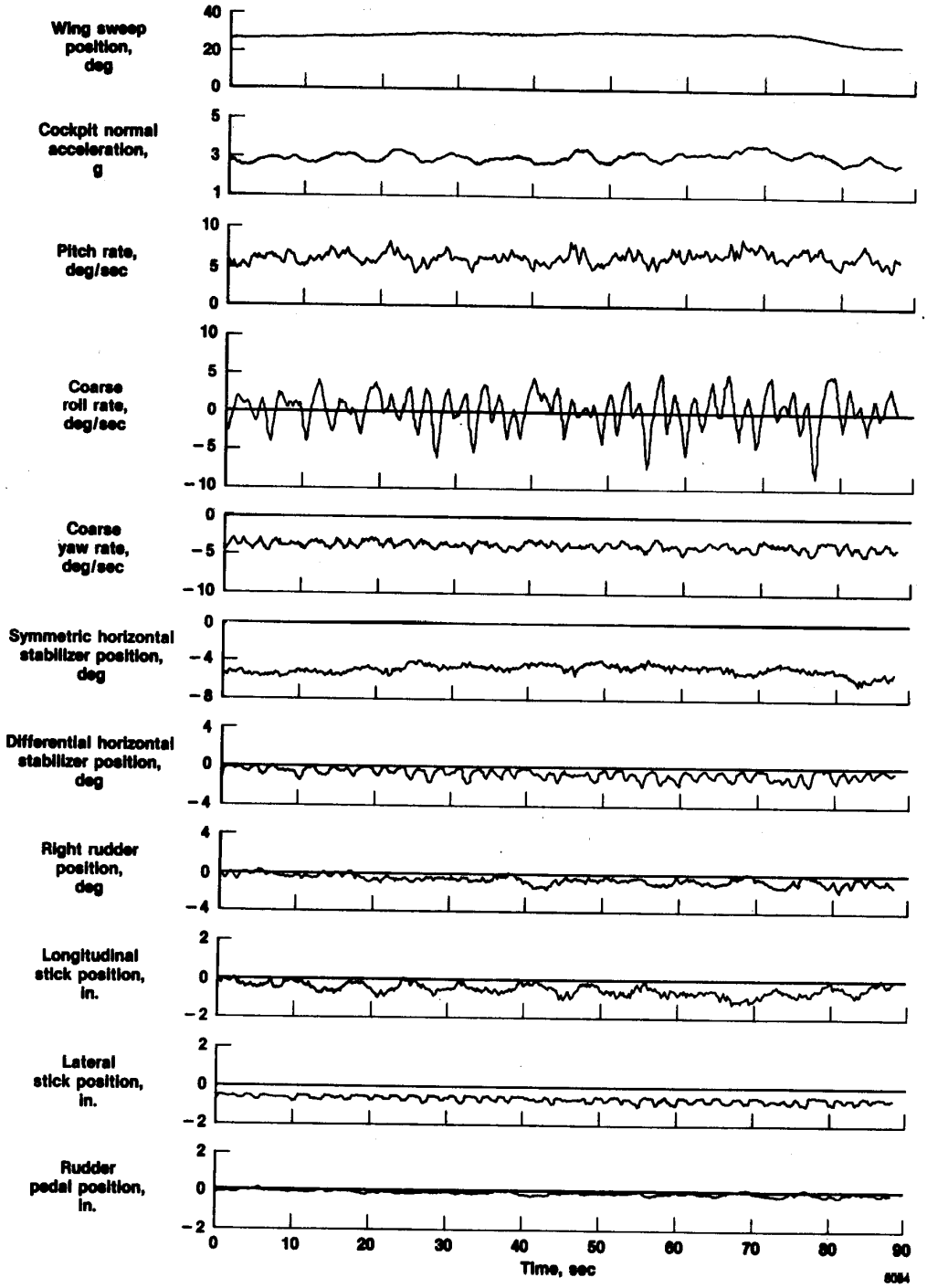

(b) Aircraft control input and response parameters.

Figure 12. Concluded.

NASA
National Aeronautics and Space Administration

Report Documentation Page

1. Report No.	2. Government Accession No.	3. Recipient's Catalog No.
NASA TM-88270		

4. Title and Subtitle

Analysis Procedures and Subjective Flight Results of a Simulator Validation and Cue Fidelity Experiment

5. Report Date

July 1988

6. Performing Organization Code

7. Author(s)

Peter C. Carr, Ames Research Center, Dryden Flight Research Facility, and Burnell T. McKissick, Langley Research Center

8. Performing Organization Report No.

H-1371

9. Performing Organization Name and Address

NASA Ames Research Center
Dryden Flight Research Facility
P.O. Box 273
Edwards, CA 93523-5000

10. Work Unit No.

RTOP-533-02-30

11. Contract or Grant No.

12. Sponsoring Agency Name and Address

National Aeronautics and Space Administration
Washington, DC 20546

13. Type of Report and Period Covered

Technical Memorandum

14. Sponsoring Agency Code

15. Supplementary Notes

16. Abstract

A joint experiment to investigate simulator validation and cue fidelity was conducted by the Dryden Flight Research Facility of NASA Ames Research Center (Ames-Dryden) and NASA Langley Research Center. The primary objective was to validate the use of a closed-loop pilot-vehicle mathematical model as an analytical tool for optimizing the tradeoff between simulator fidelity requirements and simulator cost. The validation process includes comparing model predictions with simulation and flight test results to evaluate various hypotheses for differences in motion and visual cues and information transfer. A group of five pilots flew air-to-air tracking maneuvers in the Langley differential maneuvering simulator and visual motion simulator and in an F-14 aircraft at Ames-Dryden. The simulators used motion and visual cueing devices including a g-seat, a helmet loader, wide field-of-view horizon, and a motion base platform. The acquisition and preparation of the flight test data for analysis are described. Subjective results of pilot questionnaires obtained from the flight experiment also are presented.

17. Key Words (Suggested by Author(s))

Handling qualities
Simulator technology
Stability and control

18. Distribution Statement

Unclassified — Unlimited

Subject category 05

19. Security Classif. (of this report)	20. Security Classif. (of this page)	21. No. of pages	22. Price
Unclassified	Unclassified	29	A03

NASA FORM 1626 OCT 86

*For sale by the National Technical Information Service, Springfield, Virginia 22161.