NASA Technical Memorandum 101696

The Implementation and Operation of a Variable-Response Electronic Throttle Control System for a TF-104G Aircraft

Bradford Neal and Upal Sengupta

December 1989

National Aeronautics and
Space Administration

NASA Technical Memorandum 101696

The Implementation and Operation of a Variable-Response Electronic Throttle Control System for a TF-104G Aircraft

Bradford Neal and Upal Sengupta
Ames Research Center, Dryden Flight Research Facility, Edwards, California

1989

National Aeronautics and
Space Administration
Ames Research Center
Dryden Flight Research Facility
Edwards, California 93523-5000

CONTENTS

ABSTRACT 1

INTRODUCTION 1

NOMENCLATURE 1

AIRCRAFT AND ENGINE DESCRIPTION 2

THROTTLE SYSTEM DESCRIPTION 2
- Mechanical System 2
- Electronic System 3
- TCU Modes 3
- Test Signal Inputs 4
- Instrumentation System 4

SYSTEM OPERATION 4

Operating Procedures 4
- Typical Mission Profile 5

RESULTS AND DISCUSSION 5

CONCLUDING REMARKS 6

REFERENCES 7

TABLES 7

FIGURES 9

ABSTRACT

During some flight test programs, researchers have encountered problems in the throttle response characteristics of high-performance aircraft. To study and to help solve these problems, the National Aeronautics and Space Administration Ames Research Center's Dryden Flight Research Facility (Ames-Dryden) conducted a study using a TF-104G airplane modified with a variable-response electronic throttle control system. Ames-Dryden investigated the effects of different variables on engine response and handling qualities. The system provided transport delay, lead and lag filters, second-order lags, command rate and position limits, and variable gain between the pilot's throttle command and the engine fuel controller. These variables could be tested individually or in combination. Ten research flights were flown to gather data on engine response and to obtain pilot ratings of the various system configurations. The results should provide design criteria for engine-response characteristics. This paper describes the variable-response throttle components and how they were installed in the TF-104G aircraft. It also describes how the variable-response throttle was used in flight and some of the results of using this system.

INTRODUCTION

The initial need for the throttle-response-criteria research experiment arose from unsatisfactory throttle response in the formation flying task of an F-15 aircraft with an early version of the F100 engine model derivative (EMD) engine (Myers and Burcham, 1984). The AV-8B and F-18 aircraft have also had throttle response problems. Turbofan engines tend to have slower response characteristics, and digital controls may cause undesirable time delays in the control loop. Such delays were the cause of pilot induced oscillation (PIO) when close formation tasks were attempted during the F-15 aircraft test program.

The problem with the F-15 aircraft was corrected by a software change, but it showed the need for criteria to specify desired engine-response characteristics for future projects. A throttle control system was developed for the National Aeronautics and Space Administration (NASA) Ames Research Center's Dryden Flight Research Facility's (Ames-Dryden's) TF-104G aircraft to evaluate the effect of various throttle system configurations on engine response. The variable-response throttle system simulated different types of engine response. Parameters were varied to determine pilot ratings of the different conditions.

NOMENCLATURE

EMD	engine model derivative (experimental engine)
L/L	lead-lag
LVDT	linear variable-differential transformer
NASA	National Aeronautics and Space Administration
PCM	pulse code modulation
RVDT	rotary variable-differential transformer
TCU	throttle control unit
ΔT	time delay
ζ	second-order lag damping ratio
τ_d	L/L denominator time constant
τ_n	L/L numerator time constant
ω_n	second-order lag natural frequency

AIRCRAFT AND ENGINE DESCRIPTION

The test aircraft was a TF-104G, a high-performance two-seat, trainer-fighter-interceptor airplane designed for high subsonic cruise and high supersonic combat speeds. Notable features of the aircraft include extremely thin flight surfaces, short, straight wings with 10° anhedral, and a controllable horizontal stabilizer mounted on top of the vertical stabilizer. The wings have leading- and trailing-edge flaps, and a boundary-layer control system, used in conjunction with the trailing-edge flaps to reduce landing speeds. The TF-104G aircraft with the J79-11B engine was chosen because of its fast thrust response characteristics at all settings.

The J79-11B engine is an axial-flow high-pressure-ratio turbojet engine with variable stators, a single rotor, and an afterburner. The guide vanes and the first six rows of stators are varied with engine speed and compressor inlet temperature for optimum compressor performance.

The TF-104G airplane, NASA tail number 825, has been used by Ames-Dryden for other research projects and as a support (chase) aircraft. Figure 1 is a photograph of the aircraft.

THROTTLE SYSTEM DESCRIPTION

A contractor developed the variable-response throttle control system (Calspan Corp., 1984), and Ames-Dryden performed the acceptance testing, modification, and installation of the system (Otto, 1986). The system was designed for the TF-104G aircraft. The experimental electronic throttle control system is driven by commands from a modified forward-cockpit throttle. The variable-response throttle system consisted of position sensors, an electronic throttle control unit (TCU), and an integrated servomotor-clutch assembly. The servomotor was connected to the engine fuel control by a cable linkage. The aft-cockpit throttle control system was left in the production configuration and was fully mechanical.

Mechanical System

In the production TF-104G aircraft, the forward and aft throttles are physically connected, and both command the engine using the mechanical control system. The forward and aft throttles are connected directly to the engine fuel control through a conventional cable and pulley system. The two throttle handles are linked so when one throttle handle is moved, the other tracks its position. In this configuration, the forward and aft throttle handle positions match at all times.

In the experimental configuration, the forward throttle was disconnected from the production system by removing the linkage connecting the throttle handle to the fuel-control cables. With the linkage removed, the forward throttle handle no longer tracked the throttle inputs made by the aft pilot. The aft throttle handle, however, still tracked the throttle inputs made by the forward pilot when the TCU was engaged. This occurred because the aft throttle was still mechanically connected to the fuel control, which was driven by the servomotor when the TCU was engaged. When the TCU was disengaged, the servomotor was disabled and the forward throttle had no effect on the aft throttle position or on engine response. The TCU was located in the left-hand console of the aft cockpit (fig. 2).

With the forward throttle handle disconnected from the cable system, most of the inherent friction on the handle was eliminated, so the forward throttle handle would not remain in the selected position. An adjustable friction device was added to the throttle-handle axle to solve this problem. The device was a small phenolic block and bracket, mounted in the throttle housing, which created drag against the throttle-handle axle. The device was intended to be adjustable to any friction level. Even with the friction device installed, however, the throttle stick force was adjustable only to a maximum of two pounds, approximately one-half of the normal stick force encountered in the production configuration.

A rotary variable-differential transformer (RVDT) sensed forward throttle position. It was mounted in the throttle housing and connected to the throttle handle axle through gears. Figure 3 shows the throttle housing, RVDT, and friction device assembly.

The linear variable-differential transformer (LVDT) and servomotor-clutch assembly were mounted in the engine bay. An additional cable was connected between an extra pulley, mounted on the fuel control, and the servomotor. The LVDT, used to sense the fuel control position, connected to this additional cable assembly. Figures 4 and 5 show the clutch/servomotor, LVDT, and fuel control setup.

Electronic System

Figure 6 is a simplified block diagram of the throttle control system. The variable-response electronic system replaced the original cable linkage between the forward throttle and the fuel control. The aft-cockpit throttle, left in the production configuration, served as a safety backup system.

The electrical signal from the RVDT was entered into the TCU and amplified by a gain factor variable from 0.0 to 2.9. In the normal linear operating mode, the amplified RVDT signal was checked against the TCU settings for position (amplitude) and rate limits. The signal was compared to the actual throttle position, sensed by an LVDT tied to the fuel control cable linkage. The error signal, or difference between the RVDT command and the LVDT feedback signals, was used to advance or retard the servomotor position. The motor was tied to the fuel-control cable, so its position determined the amount of fuel the engine received. A tachometer on the servomotor assembly provided a rate feedback to the TCU. The rate feedback gain was adjustable to optimize the damping characteristics of the electronic control system.

The aft-cockpit throttle-handle linkage to the fuel control was tied to the cable which connected the servomotor and LVDT with the fuel control. Therefore the LVDT position feedback signal had the same value as the aft-cockpit throttle position.

Figure 7 shows the TCU control panel built into the front face of the unit's chassis. The control panel was used to activate the system, set the values of system variables, select the operating mode, and enter test signals. To fully activate the system, the power switch was placed in the on position and the engage switch pushed up. This provided power to the TCU and the servomotor, and engaged the clutch that allowed the motor to move the fuel-control cable. If the clutch was disengaged, the motor continued to spin, but was not connected to the cable. If the motor was turned off, the clutch automatically disengaged. The standby mode provided power to the TCU only and was used to check the values of TCU variables prior to fully activating the system in order to avoid transients on initial system engagement.

TCU Modes

The original goal of the project was to simulate degraded modes of engine response and assess their effects. The TCU inserted time delays, lead and lag filters, second-order lags, rate limits, and position limits into the command path. These variables acted directly on the pilot command.

The desired mode was selected by a rotary switch on the TCU control panel. The modes could be tested individually, for example inserting time delays only without altering any other parameters. They could also be cascaded, such as using a time delay followed by a lead/lag filter. The rate and position limits acted on the output signal of the circuit selected.

The values of the parameters were selected by thumbwheel switches on the control panel. These parameters included the lead- and lag-circuit time constants (τ_n, τ_d), second-order lag damping ratio (ζ), second-order natural frequency (ω_n), length of time delay (ΔT), maximum-command position limit, and positive and negative command

rate limits. The rate limits could be adjusted independently to simulate effects such as an engine that would increase rpm at a different rate than it would decrease rpm.

Test Signal Inputs

The TCU had built-in circuits that could be used to generate test input signals. These test signals provided calibration or reference data on the response characteristics of the different system configurations. There were two types of test signal inputs available, a step input and a sinusoidal input. The step input could have positive or negative polarity, and the sinusoidal frequency could be varied from 0.0 to 2.9 Hz. The test signal (step or sine) was entered into a variable-gain amplifier. The amplitude of the test signal could be varied from 0 to $\pm 100°$ of throttle angle in 1° increments. The test signal was totaled with the forward pilot's throttle command. As a result, the test circuits could generate input variations centered around any desired throttle setting.

The aft-cockpit pilot controlled the test functions, like all TCU functions, from the TCU control panel. The pilot selected the type of signal using a momentary-on toggle switch, normally kept in the off position. The step-input polarity was also controlled by a toggle switch. The amplitude of the test signal and the sinusoidal input frequency were adjusted with thumbwheel switches on the control panel.

Instrumentation System

The main component of the TF-104G instrumentation system was a CT-77C pulse code modulation (PCM) data acquisition system. Analog signals from the TCU, as well as data from sensors on the aircraft, were read by the aircraft PCM system. The PCM system converted inputs into a serial-digital bit stream transmitted to the ground using a frequency modulation (FM) telemetry transmitter. The telemetered serial PCM data was received on the ground, decoded, formatted for real-time display on cathode ray tubes (CRTs) and strip charts, and recorded for postflight analysis.

The CT-77C word length for one digital word was 10 bits. A data frame was one complete transmission cycle of serial-digital words. The configuration used for the throttle experiment had a total frame length of 80 words (not all of these were used). The data frame was repeated at a rate of 200 Hz, meaning that each instrumented parameter was sampled at 200 samples/sec.

The measured values of the pressure and temperature parameters were used to generate computed values of airspeed, altitude, Mach number, static temperature, and standard day temperature (at altitude). These calculated parameters were also formatted for a real-time display. Table 1 shows the aircraft and engine parameters measured for this project. Most of the parameters monitored were input and output signals from the different sections of the TCU. Table 2 shows the TCU parameters measured for this experiment.

SYSTEM OPERATION

Operating Procedures

The aft-cockpit pilot started the engine for each flight using the mechanically-direct throttle system for safety. The forward throttle could be used to start the engine, but this was not considered a viable option because of the possiblility of power interruptions to the TCU during the change over from ground to internal power.

The frontseat pilot was the experiment evaluation pilot. The backseat pilot controlled the variable-response system and set the configuration of the system for specific test conditions. The evaluation pilot did not know these settings during the test flights, allowing an unbiased rating on the handling qualities of the configurations.

The backseat pilot could disengage or override the electronic system at any time. The mechanical control system was always functional from the aft cockpit and operated in parallel with the electronic system when the TCU was activated. If the TCU was disengaged, the frontseat pilot had no way to control the engine.

As a precautionary measure and to develop system confidence, the aft pilot conducted the taxi, takeoff, and landing for the first three flights. For these phases of the mission, the TCU was placed in the standby mode but not engaged, allowing the electronic throttle system parameters to be monitored in the control room but preventing the forward pilot from controlling the throttle. After the first three flights, confidence in the electronic throttle system was high enough to allow the forward pilot to conduct all remaining taxi, takeoff, and landing tasks. During these tasks the electronic throttle system was set to a baseline throttle response, considered to be the best for this throttle control system.

Once airborne, the TCU was set to the desired test configurations. For the first three flights, the TCU was disengaged and the power brought to standby before changes were made to any of the TCU parameters. This prevented any uncommanded throttle transients resulting from the change in TCU parameters. Again, once confidence was established in the throttle control system, it was disengaged only to perform TCU mode changes. After the first three flights, all thumbwheel parameter changes (fig. 3) were made with the TCU engaged. The pilots knew that small transients in throttle position might occur, but preferred this to repeatedly disengaging and reengaging the system.

Typical Mission Profile

A typical flight consisted of 10 to 15 test conditions and lasted approximately 1.3 hr. All test conditions were flown at a target altitude of 15,000 ft and airspeed of 350 kn. At these conditions the TCU was set to the desired configuration, and the formation flying task was conducted. After each test point the TCU was returned to the baseline throttle response, allowing the evaluation pilot to regain a feel for the baseline throttle response and providing time to evaluate the previous test point.

All test conditions were evaluated using a two-phase formation flying task. The first portion of the task was the gross acquisiton of the formation position on the lead aircraft (an F-18 or T-38 aircraft) and refining that position to a fine tracking task with no throttle changes by the lead aircraft. After the gross acquisition was refined to the fine tracking task, on call from the evaluation pilot, the lead aircraft began making small, unannounced longitudinal accelerations and decelerations and shallow bank turns. The evaluation pilot attempted to match these changes.

At the beginning of this program a simulated refueling, using an F-18 or T-38 airplane as a simulated tanker, was discussed as a possible evaluation task. This task was considered unacceptable, however, because of the lack of suitable reference points on the lower surfaces of the F-18 and T-38 aircraft for the evaluation pilot could gauge his performance by.

RESULTS AND DISCUSSION

Preliminary results show some interesting trends in the relationship between pilot ratings of engine response and the settings of the TCU. For example, pilot ratings were very sensitive to time delays in the forward command path.

Some design modifications can be suggested, if the project is to be continued or used on another type of aircraft and engine. Many design choices for the present system were based on cost and time constraints.

The physical construction of the TCU presented problems in repair and maintenance. The unit contained several printed circuit cards bolted together onto a pressed aluminum chassis. The cards were connected by a flexible ribbon cable soldered to each card. A more rugged chassis with card slots milled in the sides would allow circuit cards to be inserted and removed without dismantling the entire unit. This would also permit a modular approach to the design of the system, allowing certain components to be modified without having to rebuild others.

The forward throttle friction device also presented problems. The amount of friction adjustment available was extremely limited and the difficulty of adjustment excessive. If the device was more accessible for adjustment and able to adjust the stick force to at least that of the production TF-104G, the throttle stick force could be one of the variable parameters in the experiment. In this experiment the throttle stick force was adjusted to its maximum value and left at that level for the duration of the experiment.

One basic change requested by project personnel was additional output signals from the TCU to allow instrumentation of the power/engage switch positions and of the setting of the sequence select or mode switch. Control-room personnel could then monitor these settings during flights. The number of radio calls between the ground and the airplane to verify switch settings would then be reduced.

Finally, remote setting of the TCU parameters might be desirable. If the TCU could accept inputs from an external source and adjust its values for system variables accordingly, a signal could be sent from the ground to establish test conditions. This would reduce the aft-seat pilot's workload and allow greater flexibility during flight tests.

At the start of the flight test phase, there was doubt about which type of flying task was best for evaluation of engine-response criteria. Much of the flight time during the first three flights was used to determine standard tasks for future evaluations. After these were defined, the test flights were smoother and more efficient. A simulated refueling task would have been useful as an evaluation condition but would have required the use of tanker and boom for acceptable evaluation cues. This was beyond the scope and budget of this project.

CONCLUDING REMARKS

A variable-response electronic throttle control system was installed in a TF-104G aircraft. The system was used to check the effects of different variables, such as time delays and rate limits, on throttle response characteristics. The experimental throttle control system affected the forward-cockpit throttle. The aft-cockpit throttle was left in the production configuration and the aft-cockpit pilot controlled the system variables.

The system was tested using fine tracking tasks. The variables were set before each task, and restored to baseline values after each task was completed. The forward-cockpit pilot then evaluated the performance of the throttle and engine during the task.

The system accomplished the basic tasks required of it. A series of ten flights was conducted over an eight week period, with no significant operational or maintenance problems. Over one-hundred test points were flown, in addition to the baseline-step and frequency-response measurements taken for the various system configurations. The variable-response control system was a valuable tool in the investigation of throttle-response criteria.

Ames Research Center
Dryden Flight Research Facility
National Aeronautics and Space Administration
Edwards, California, February 13, 1989.

REFERENCES

Myers, Lawrence, and Frank W. Burcham, Jr., "Preliminary Flight Test Results of the F100 EMD Engine in an F-15 Airplane," AIAA-84-1332, June 1984.

Calspan Corp., *Design, Fabricate, Install Variable Response Electronic Throttle Control System in an F-104 Airplane*, Technical Proposal 7950, RFP 2PR-OFAP-0011, Dec. 1984.

Otto, William F. *Variable Response Electronic Throttle Control System: System Checkout and Acceptance Test Plan*, ETCS TM No. 6, Feb. 1986.

Table 1. Monitored aircraft and engine parameters.

Parameter	Range
Lateral acceleration	$\pm 0.25\ g$
Normal acceleration	-1 to $+3\ g$
Longitudinal acceleration	$\pm 1\ g$
Exhaust gas temperature	415 to 749 °C
Nozzle area	280 to 660 in^2
Engine speed	0 to 9999 rpm
Static pressure	5 to 80 in. Hg
Total pressure	5 to 80 in. Hg
Total temperature	-100 to $+150$ °F

Note: TF-104G aircraft throttle angle settings are as follows:
Idle power = 11–13°
Military power = 72–74°
Maximum afterburner = 113°

Table 2. Monitored TCU parameters.

Parameter	Range
Forward throttle command	0 to 113°
Command gain	0.0 to 2.0
Throttle position feedback	0 to 113°
Position error signal	±100°
Test circuit output	±100°
Test gain	0.0 to 1.0
Test signal frequency	0.0 to 2.0 Hz
Forward throttle plus Test command	0 to 113°
Second-order lag circuit output	0 to 113°
Second-order lag damping (ζ)	0.40 to 0.99
Second-order lag natural frequency	5.0 to 9.9 rad/sec
Lead-lag circuit output	0 to 113°
Numerator time constant	0.0 to 3.9 sec
Denominator time constant	0.0 to 3.9 sec
Time delay circuit output	0 to 113°
Time delay setting	0 to 1.98 sec
Servo clutch advance signal	0 to 10 V
Servo clutch retard signal	0 to 10 V
Servomotor rate feedback	0 to 100 percent
Selected TCU output command	0 to 113°
TCU command position limit	13 to 113°
Positive rate limit	10 to 99 deg/sec
Negative rate limit	−10 to −99 deg/sec

EC80 12366

Figure 1. The TF-104G aircraft.

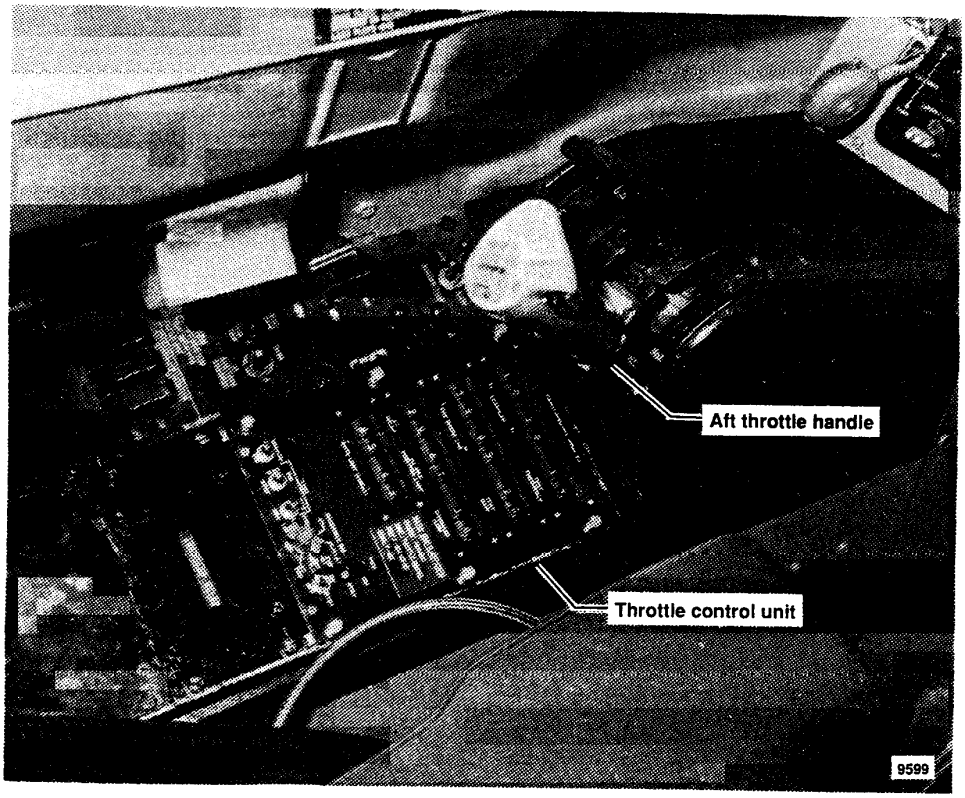

Figure 2. TCU installation in the aft cockpit.

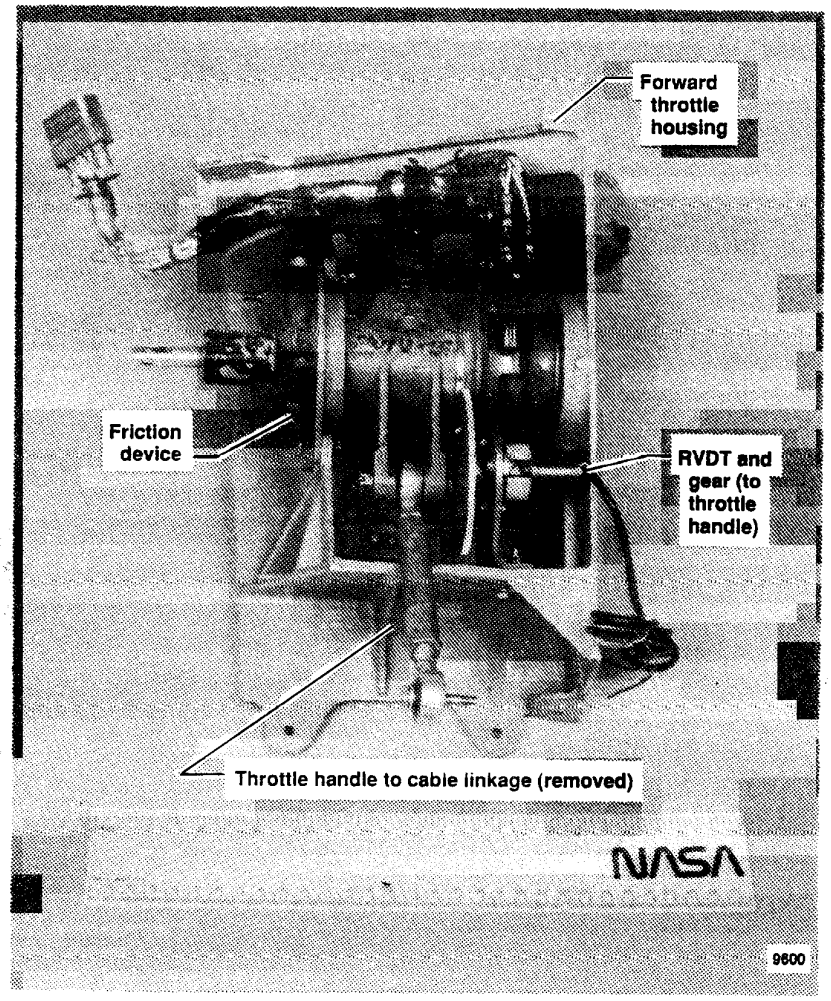

Figure 3. Forward throttle assembly.

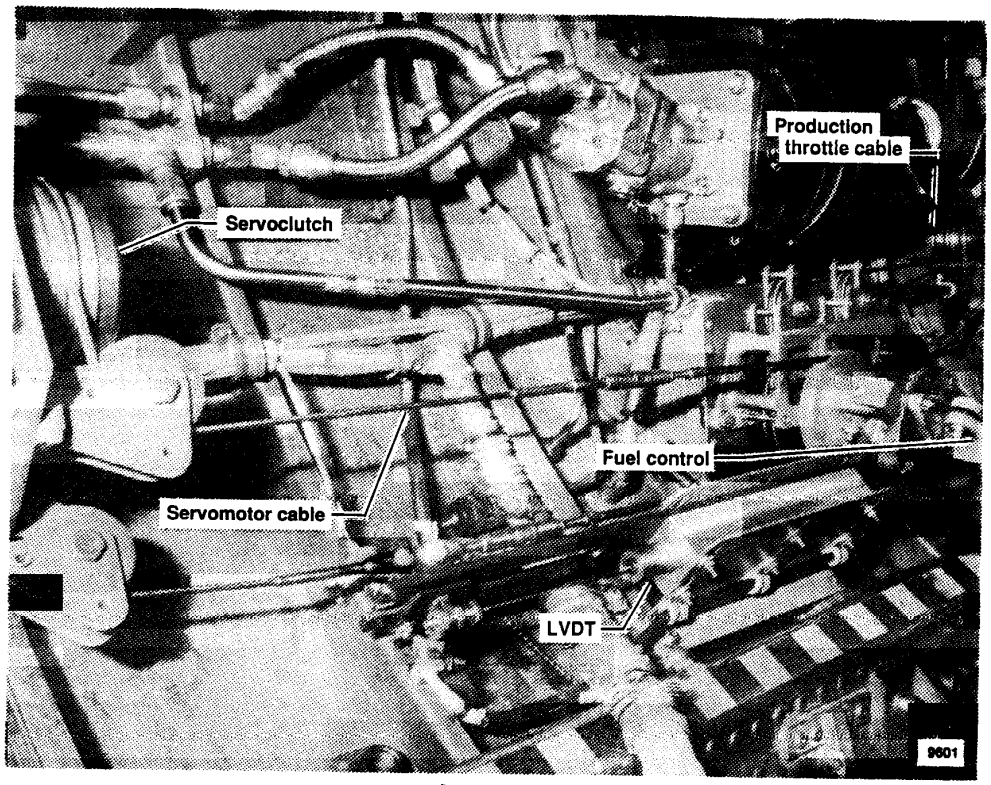

Figure 4. LVDT and servomotor cable assembly.

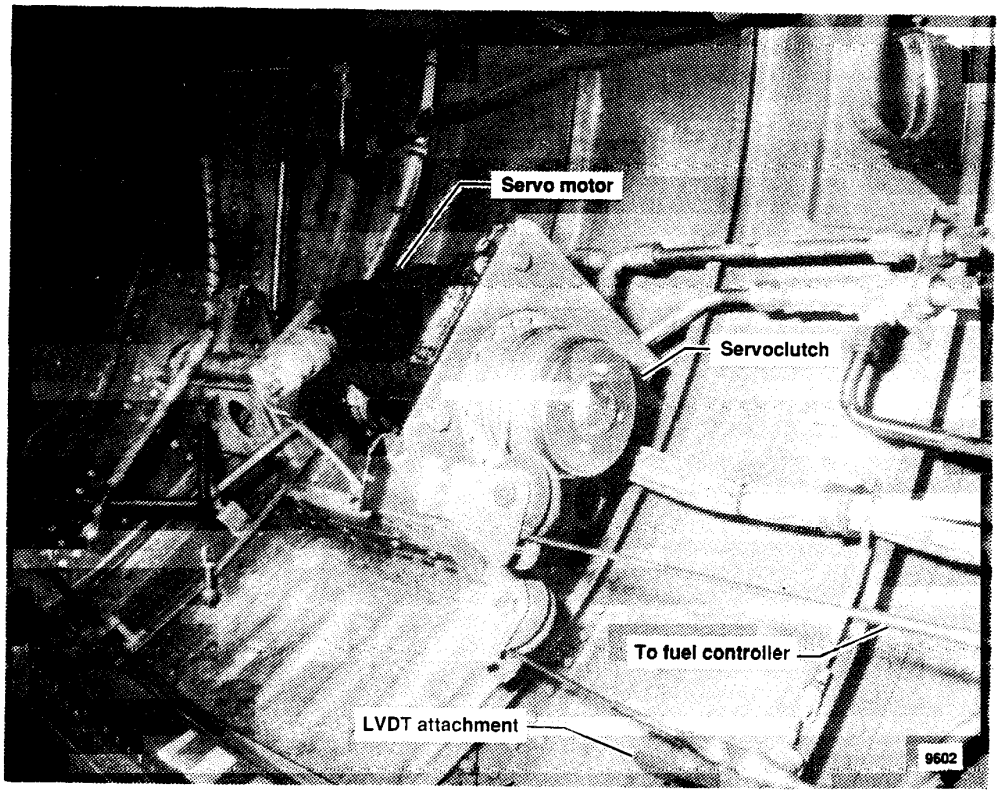

Figure 5. Servomotor and clutch assembly.

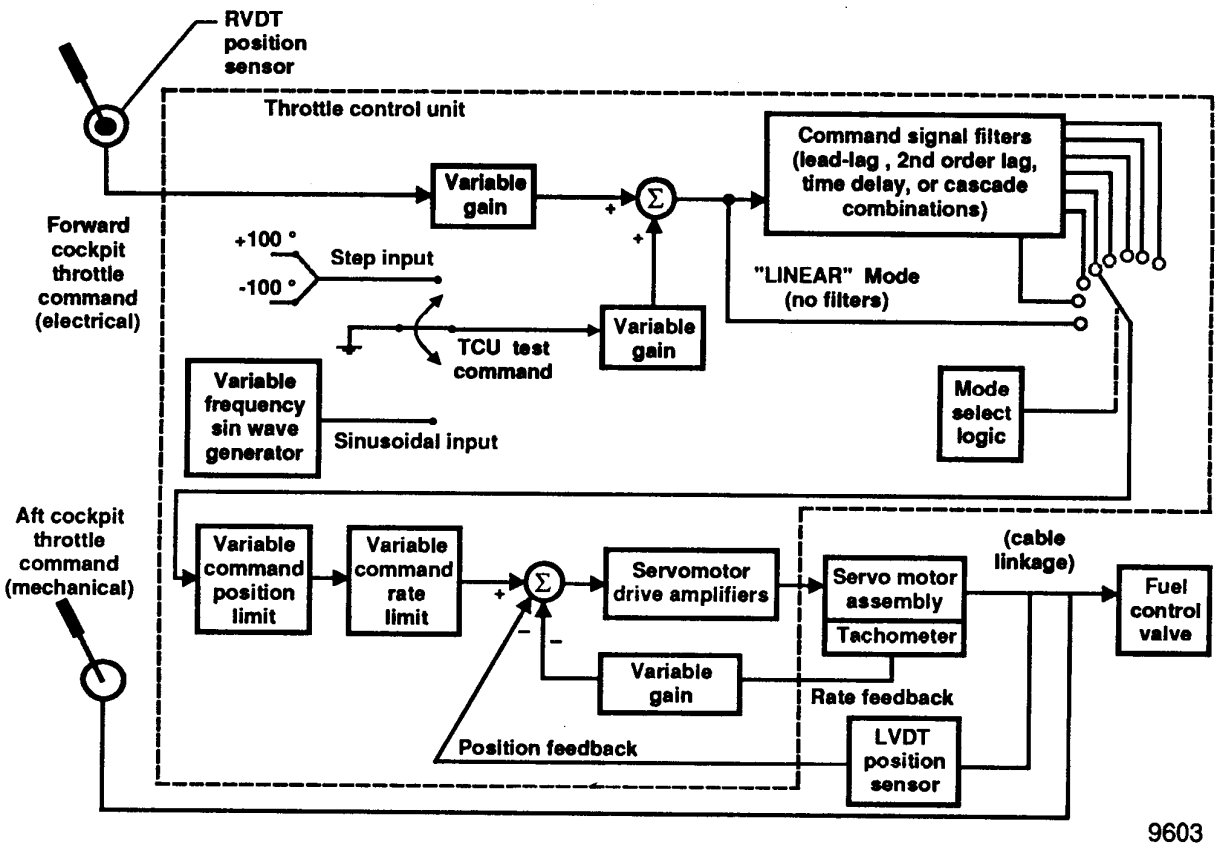

Figure 6. Variable-response electronic throttle control system.

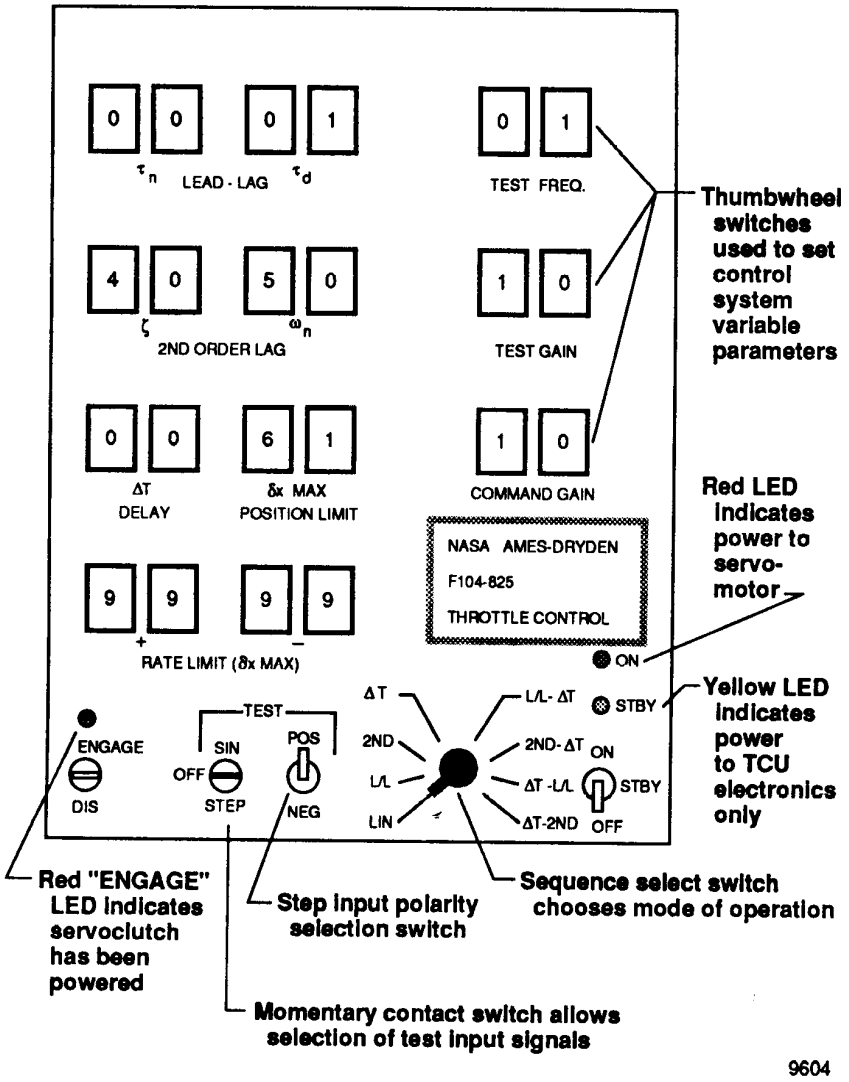

Figure 7. TCU control panel.

NASA
National Aeronautics and Space Administration

Report Documentation Page

1. Report No.	2. Government Accession No.	3. Recipient's Catalog No.
NASA TM-101696		

4. Title and Subtitle

The Implementation and Operation of a Variable-Response Electronic Throttle Control System for a TF-104G Aircraft

5. Report Date

December 1989

6. Performing Organization Code

7. Author(s)

Bradford Neal and Upal Sengupta

8. Performing Organization Report No.

H-1542

10. Work Unit No.

RTOP 307-07-000

9. Performing Organization Name and Address

NASA Ames Research Center
Dryden Flight Research Facility
P.O. Box 273, Edwards, CA 93523-5000

11. Contract or Grant No.

12. Sponsoring Agency Name and Address

National Aeronautics and Space Administration
Washington, DC 20546

13. Type of Report and Period Covered

Technical Memorandum

14. Sponsoring Agency Code

15. Supplementary Notes

16. Abstract

During some flight test programs, researchers have encountered problems in the throttle response characteristics of high-performance aircraft. To study and to help solve these problems, the National Aeronautics and Space Administration Ames Research Center's Dryden Flight Research Facility (Ames-Dryden) conducted a study using a TF-104G airplane modified with a variable-response electronic throttle control system. Ames-Dryden investigated the effects of different variables on engine response and handling qualities. The system provided transport delay, lead and lag filters, second-order lags, command rate and position limits, and variable gain between the pilot's throttle command and the engine fuel controller. These variables could be tested individually or in combination. Ten research flights were flown to gather data on engine response and to obtain pilot ratings of the various system configurations. The results should provide design criteria for engine-response characteristics. This paper describes the variable-response throttle components and how they were installed in the TF-104G aircraft. It also describes how the variable-response throttle was used in flight and some of the results of using this system.

17. Key Words (Suggested by Author(s))

Digital Control Systems
Engine Throttle Control Systems
Throttle response

18. Distribution Statement

Unclassified — Unlimited

Subject category 07

19. Security Classif. (of this report)	20. Security Classif. (of this page)	21. No. of pages	22. Price
Unclassified	Unclassified	18	A02

NASA FORM 1626 OCT 86

**For sale by the National Technical Information Service, Springfield, VA 22161-2171.*