NASA Technical Memorandum 4234

A Proposed Kalman Filter Algorithm for Estimation of Unmeasured Output Variables for an F100 Turbofan Engine

Gurbux S. Alag and Glenn B. Gilyard

OCTOBER 1990

NASA

NASA Technical Memorandum 4234

A Proposed Kalman Filter Algorithm for Estimation of Unmeasured Output Variables for an F100 Turbofan Engine

Gurbux S. Alag
PRC System Service,
Edwards, California

Glenn B. Gilyard
Ames Research Center
Dryden Flight Research Facility
Edwards, California

NASA
National Aeronautics and
Space Administration
Office of Management
Scientific and Technical
Information Division

1990

A PROPOSED KALMAN FILTER ALGORITHM FOR ESTIMATION OF UNMEASURED OUTPUT VARIABLES FOR AN F100 TURBOFAN ENGINE

Gurbux S. Alag*
PRC Systems Service
Edwards, CA

Glenn B. Gilyard**
NASA Ames Research Center
Dryden Flight Research Facility
Edwards, CA

Abstract

To develop advanced control systems for optimizing aircraft engine performance, unmeasurable output variables must be estimated. The estimation has to be done in an uncertain environment and be adaptable to varying degrees of modeling errors and other variations in engine behavior over its operational life cycle. This paper presents an approach to estimate unmeasured output variables by explicitly modeling the effects of off-nominal engine behavior as biases on the measurable output variables. A state variable model accommodating off-nominal behavior is developed for the engine, and Kalman filter concepts are used to estimate the required variables. Results are presented from nonlinear engine simulation studies as well as the application of the estimation algorithm on actual flight data. The formulation presented has a wide range of application since it is not restricted or tailored to the particular application described in the paper.

Nomenclature

A, B, C, D, F, G, H	system matrices in state variable representation
A_J	nozzle area, in.
b	bias vector
CDF	component deviation factors
$CIVV$	fan inlet guide vane angle, deg
DEEC	digital electronic engine control
D_{NOZ}	nozzle drag, lb
D_{RAM}	ram drag, lb
d	difference
E	expectation operator
EMD	engine model derivative
e	state error vector
F_G	gross thrust, lb
F_{NP}	net propulsive thrust, lb
I	identity matrix
K	Kalman filter gain
N_1	fan rotor speed, rpm
N_2	core rotor speed, rpm
P	Riccati matrix
PB	burner static pressure, lb/in^2
PLA	power lever angle, deg
PSC	performance seeking control
PSM	propulsion system model
$P_{T_{2.5}}$	compressor inlet total pressure, lb/in^2
P_{T_5}	low turbine inlet pressure, lb/in^2
P_{T_6}	afterburner inlet total pressure, lb/in^2
P_{T_7}	nozzle throat total pressure, lb/in^2
Q	state noise covariance matrix
R	measurement noise covariance matrix
R_{CVV}	compressor stator vane angle, deg
SM_F	fan stall margin

*Senior Control Engineer.
**Aerospace Engineer. Member AIAA.

Copyright ©1990 by the American Institute of Aeronautics and Astronautics, Inc. No copyright is asserted in the United States under Title 17, U.S. Code. The U.S. Government has a royalty-free license to exercise all rights under the copyright claimed herein for Governmental purposes. All other rights are reserved by the copyright owner.

SM_{HC}	high compressor stall margin
SOAPP	state-of-the-art propulsion program
SSM	steady state model
SVM	state variable model
TMT	turbine metal temperature, °R
$T_{T_{2.5}}$	compressor inlet total temperature, °R
T_{T_3}	burner inlet total temperature, °R
T_{T_4}	burner exit total temperature, °R
$T_{T_{4.5}}$	low turbine inlet total temperature, °R
T_{T_6}	afterburner inlet total temperature, °R
T_{T_7}	nozzle throat total temperature, °R
u	control input vector
WC_{FAN}	corrected fan air flow, lb/sec
WC_{HPC}	corrected compressor air flow, lb/sec
W_F	main burner fuel flow, lb/hr
w_1	state excitation noise
w_2	measurement noise
x	state vector
y	output vector
y_{aux}	vector of auxiliary, (unmeasured) output variables
z	augmented state vector
δ	variation from trim values

Superscripts

T, $'$	transpose of a matrix
$\hat{}$	estimated value of variable
$\cdot$	derivative

Subscript

b	output bias term
m	flight or simulated data
$N.L.$	nonlinear
t	trim, initial, or steady state
1	augmented system matrices

Introduction

Efforts to improve aircraft turbine engine efficiency have led to an increase in the number of engine control variables and a corresponding increase in the complexity of control laws. Control laws for current engines are based on classical control theory and empirical schedules for a nominal engine. Classical control theory has served well for the current and older engines. The design of future fighters as multifunction aircraft and development of integrated flight/propulsion control systems, however, require sophisticated control systems capable of obtaining the maximum performance from the engine. Optimal control techniques using modern control theory are required to obtain additional gains in engine performance. For modern aircraft, accounting for engine variations through designs based on predetermined control schedules is increasingly difficult because of the increased complexity and increased number of control effectors on the engines. Engine-to-engine component variations, engine deterioration, and off-nominal behavior are difficult to account for in the design of control system schedules.

An adaptive control algorithm, which computes optimal control trim settings for the engine while maximizing the vehicle performance for a given flight condition, accounts for these variations better than gain scheduling. Specifically, an adaptive trim control system computes and applies an incremental steady state trim to enhance the engine performance.[1]

For over a decade, the National Aeronautics and Space Administration (NASA) Ames Research Center, Dryden Flight Research Facility (Ames-Dryden) has conducted a multidisciplinary flight research program on an F-15 airplane. Significant portions of this research involved the flight evaluation of advanced propulsion control concepts in programs such as digital electronic engine control (DEEC), the F100 engine model derivative (EMD), and highly integrated digital electronic control (HIDEC).[2] The increased performance and improved fuel economy demonstrated on the F-15 HIDEC research vehicle is the basis of the performance seeking control (PSC) program, which will provide additional improvements in these areas.

Ames-Dryden, McDonnell Aircraft Company, and Pratt & Whitney are currently developing and demonstrating an adaptive PSC system in flight on a NASA F-15 airplane powered by F100 EMD engines. The PSC system optimizes aircraft performance by applying adaptive trim control to the propulsion system operating in a pseudo-steady-state cruise mode. The trim schedules are determined for a highly nonlin-

ear propulsion system which has system and measurement noise, unmeasurable parameters, and sensitivity to normal deterioration over its life cycle.

Figure 1 shows the adaptive trim control structure used for the PSC. The state variable model (SVM) and the steady-state model (SSM) which model the dynamic and steady-state behavior of a nominal engine, are key components of the system. These models are stored onboard the aircraft in a table look-up form and are discussed in more detail in the following section.

These models are used in formulating the propulsion system model (PSM) which represents a small perturbation model of the actual flight propulsion system. The PSM contains relations which provide estimates of performance measures (such as augmentor effects, thrust, and stall margins) and constraint equations. A linear programming algorithm is used to find the optimal solution and these commands are then applied to the engine through the DEEC.

The values of output variables, which are often not directly measurable, are needed for the optimization algorithm used in the PSC. These variables are estimated under changing levels of engine health, manufacturing differences between engines, and other off-nominal behavior. Accommodating these performance variations in engines has been investigated in two recent studies.[3,4]

Reference 3 presents an algorithm for estimating the cause and level of off-nominal engine operation by using a Kalman filter algorithm to estimate five engine factors. These five factors, referred to as component deviation factors (CDF), compensate for off-nominal performance. These factors were estimated by treating them as biases, and the original state vector was augmented to give five additional states.[5] These five factors are not explicitly used in the optimization algorithm and their physical significance is unclear because the formulation does not account for biases, prediction errors, and Reynolds number effects. Since the coefficients with respect to the CDF parameters are required in the Kalman filter development, the CDF formulation requires detailed modeling of the off-nominal process. A flight data evaluation of this algorithm is described in Ref. 6.

In Ref. 4, a component tracking filter is used to achieve the model accuracy required to optimize engine performance. The component tracking filter combines the concept of state tracking and adaptive filtering to minimize engine/model mismatch. It is based on a frequency decomposition of the differences between the sensed engine parameters and the model values.

This paper presents another method of accounting for off-nominal operation and other modeling inaccuracies. Since any variation from the nominal model would result in a change in the sensed values of the measured outputs, the off-nominal behavior of an engine is characterized in terms of these changes. Uncertainties associated with any given engine will be represented as systematic errors in the sensed output parameters. These systematic errors will be accounted for by augmenting the original state equation with bias states. A Kalman filter is used to estimate the original engine states and the bias states. The Kalman filter inputs are measurements from standard F100 engine control instrumentation. The auxiliary output equations for the unmeasured output variables are modified to include the effect of the bias states.

The concept is validated by applying the developed filter on both simulation and flight data. For the simulation data case, the output variables were estimated by using the data from the available nonlinear engine simulation. Both a nominal engine and an engine in which intentional degradation was introduced to create off-nominal behavior were considered. For the flight data case, the estimation process was performed using actual flight data from an F-15 aircraft. For this case, comparative results are also presented for the proposed algorithm and the CDF formulation. Both the simulation and flight evaluations were carried out for a flight condition of Mach 0.90 and 30,000 ft. for a part power setting.

Engine Description

The engine used in this study is the Pratt & Whitney F100 EMD low-bypass ratio, twin spool, afterburning turbofan engine[7] (Fig. 2). The engine is controlled by a DEEC, a full-authority digital electronic control system which performs the functions of the standard F100 engine hydromechanical, unified fuel control, and supervisory digital electronic engine control.

Engine Models

Pratt & Whitney has developed a comprehensive nonlinear dynamic engine model, the state-of-the-art propulsion program (SOAPP) model. This model is

the best representation of the engine and predicts engine performance with minimal error over the full power range and flight envelope and for both steady-state and transient operation. This nonlinear simulation is a high-fidelity model that represents each component in the engine and control but does not run in real time.

For real-time use, a set of linearized SVMs were developed from the SOAPP model. To cover the entire flight envelope, 49 models were developed. The model is selected as a function of burner static pressure (PB). These models compare well with the large scale nonlinear aerothermal model and actual engine test data, and they can be implemented efficiently in real time. Figure 3 shows a simulation model for the F100 engine based on the state variable formulation.

The SSM engine relationships and trim predictions (basepoints) are also derived from the SOAPP model. A two-dimensional table look-up scheduled on 7 values of PB and 40 values of afterburner total pressure (P_{T_6}) is needed to represent the steady state information. Each SSM consists of a basepoint control vector, a basepoint output vector, and a sensitivity coefficient matrix which relates the changes in control positions to change in outputs.

The PSC algorithm requires the variables listed in Table 1, which are functions of the engine states and the input control variables. These variables include engine outputs which cannot be measured but are required to calculate performance measures of the engine. An additional set of variables, which are nonlinear functions of the unmeasured output variables, are listed in Table 2. These variables are used to predict both the engine performance and the constraints needed to develop optimal engine controllers.

Kalman Filter Concepts

The entire state vector of the system to be controlled is often assumed to be measurable. Most of the solutions to optimal control problems are obtained as a feedback law implementable only if the entire state vector is available. In most complex systems the entire state vector cannot be measured, and a suitable approximation to the state vector must be determined and substituted into the control law. The system that produces, in deterministic setting, an approximation to the state vector is called an observer.[8]

Kalman and Bucy solved the optimal observer problem in a stochastic environment, and this solution has had a tremendous impact on optimal filtering theory.[9] The Kalman filter represents the most widely applied and demonstrably useful result to emerge from the state variable approach of "modern control theory."[10]

The system is

$$\dot{x} = Ax + Bu + w_1 \tag{1}$$

$$y = Cx + Du + w_2 \tag{2}$$

Where A, B, C, and D are system matrices in state variable representation, x is the state vector, u is the control input vector, y is the output vector, w_1 is the state excitation noise, and w_2 is the observation or measurement noise. Both w_1 and w_2 are white, uncorrelated Gaussian processes, with intensity Q and R respectively.

The observer is

$$\dot{\hat{x}} = A\hat{x} + Bu + K[y - C\hat{x} - Du]$$

where K is the Kalman filter gain.

The optimal observer problem is finding the matrix K so as to minimize $E\{e^{\mathrm{T}} Re\}$, where

$$e = x - \hat{x}$$

and R is a positive-definite symmetric weighting matrix. In this problem, E is the expectation operator and e is the state error vector. If R is a positive-definite matrix, the optimal observer is called nonsingular. The Kalman filter is the solution to the nonsingular optimal observer previously outlined. The optimal observer problem is solved by choosing the gain matrix.[11]

$$K = PC^{\mathrm{T}} R^{-1}$$

where P is the state error covariance matrix, $E[(x - \hat{x})(x - \hat{x})^{\mathrm{T}}]$, and is the solution to the matrix Riccati equation

$$\dot{P} = AP + PA^{\mathrm{T}} + Q - PC^{\mathrm{T}} R^{-1} CP$$

For a time invariant case, the steady state solution for P is a constant matrix and is a unique nonnegative definite solution of the algebraic Riccati equation

$$0 = AP + PA^{\mathrm{T}} + Q - PC^{\mathrm{T}} R^{-1} CP$$

Figure 4 shows a typical Kalman filter structure used to estimate states and outputs.

Proposed Formulation

In Kalman filter derivation, linear models for the system dynamics and measurement relation are assumed to be adequate for developing optimal estimators. No model is perfect, and a linear model, in particular, is the result either of intentional approximation and simplification or of a lack of knowledge about the system being modeled.[12] To account for degraded engine operation and modeling inaccuracies, the proposed formulation augments the output vector by adding a bias vector to represent the uncertain parameters.[5] The dynamic equations can thus be expressed as

$$\dot{x} = Ax + Bu + w_1$$
$$y = Cx + Du + b + w_2$$

where b is the bias vector. The bias vector is estimated by adjoining b to x and defining a new state vector, z

$$z = \begin{bmatrix} x \\ \cdots \\ b \end{bmatrix}$$

with the condition

$$\dot{b} = 0$$

The state equation can be rewritten as

$$\dot{z} = A_1 z + B_1 u + G w_1$$
$$y = C_1 z + Du + w_2$$

where

$$A_1 = \begin{bmatrix} A & \vdots & 0 \\ \cdots & & \cdots \\ 0 & \vdots & 0 \end{bmatrix} \quad B_1 = \begin{bmatrix} B \\ \cdots \\ 0 \end{bmatrix}$$

$$C_1 = [C \ \vdots \ I] \qquad G = \begin{bmatrix} I \\ \cdots \\ 0 \end{bmatrix}$$

If the estimate of z is $\hat{z}$, where

$$\hat{z} = \begin{bmatrix} \hat{x} \\ \cdots \\ \hat{b} \end{bmatrix}$$

then the Kalman filter estimate is given by

$$\dot{\hat{z}} = A_1 \hat{z} + B_1 u + P C_1^{\mathrm{T}} R^{-1} [y - C_1 \hat{z} - Du]$$

where P is the steady state solution to the Riccati equation

$$0 = A_1 P + P A_1^{\mathrm{T}} + G Q G^{\mathrm{T}} - P C_1^{\mathrm{T}} R^{-1} C_1 P$$

The auxiliary set of unmeasured output variables ($\hat{y}_{aux}$) are related to the engine states and control inputs through the algebraic equation

$$\hat{y}_{aux} = Hz + Fu$$

Details of the state variable formulation for the F100 engine are presented in the appendix. The ($\hat{y}_{aux}$) outputs are listed in Table 1.

In spite of the mathematical formalism of the Kalman filter, engineering insight and experience is required to develop an effective operational filter algorithm. A mathematical model of both the system structure and uncertainty is inherently embodied in the Kalman filter structure. The main design problem is attaining an adequate mathematical model upon which to base the filter. Even after selecting an appropriate model, the matrices Q and R can be difficult to determine. This is done by a process called "tuning" the Kalman filter. It is a trial and error procedure for determining which matrix values yield the best estimation performance for that particular filter structure.

The matrix R was determined by analysis of flight data available for the F100 engine. The elements of matrix Q were, however, selected by evaluating the performance of the Kalman filter by trial and error. Figure 5 shows the implementation process used to estimate the output variables for the F100 engine using the Kalman filter.

This proposed formulation estimates unmeasured output variables by explicitly modeling the effects of off-nominal engine behavior as biases on the measurable output variables.

Results

The proposed estimation algorithm was developed and evaluated for a Mach 0.90 and 30,000 ft flight condition. The algorithm was evaluated by a comparison with SOAPP simulation results and also by application to flight data. The flight data results were compared with the CDF formulation results for the same data.

Simulation Evaluation

The SOAPP simulation evaluations consisted of estimating the desired variables using both a nominal and

a degraded engine. In each case, the power lever angle (PLA) was held to 37° for 15 sec and then stepped up to 43° and held constant for the remainder of the run.

Measured outputs were obtained from the SOAPP simulation and were corrupted with noise, as shown in Table 3. These are typical values obtained from flight data. The measurements with noise and the values of the control variables were entered into the estimation algorithm and the desired estimates were obtained. The Kalman filter state vector, a perturbation of the steady state conditions, was initialized to zero for all states.

The algorithm needed to generate consistent state estimates which were robust with respect to the measurement covariance matrix Q (the only variable selected by trial and error). An important aspect of the development is determining unmeasured output vector, $\hat{y}_{aux}$. Inconsistent estimates of the states would give different values of $\hat{y}_{aux}$ for different values of Q when applied to the same data.

The state vector estimates converged to the same value for different values of Q. This was evaluated for values of Q = I and Q = 10I. The difference in the estimated states for Q = I and Q = 10I, for a nominal engine, is shown in Fig. 6. This figure shows that the state estimates converge to the same value and the effect of change in Q on the steady-state response is minimal.

The five measured output variables obtained from the SOAPP for a nominal engine were compared with the estimates of these variables obtained from the filter (Fig. 7(a)). The prediction values subtracted from the simulated measurements were held constant throughout the run. These values were the same as the simulated measurements at the beginning of the run, accounting for the excellent comparison over the initial interval. The Kalman filter was not updated in this evaluation, so the comparisons indicate that the model is quite robust. The comparisons are very good in spite of the large change in the operating conditions. The CDF based formulation would have used five different models for the PB change of this maneuver.

Figure 7(b) shows the measurement bias estimates. As expected, they are nearly zero until the PLA is increased. As the engine attains a new operating condition, the bias parameters increase to levels which account for the effects not modeled in the SVM.

To assess the condition when significant differences exist between the measured data and the predicted data, the following nominal biases were added to the simulated flight data: ΔN_1 (fan rotor speed) = 50.0, ΔN_2 (core rotor speed) = 50.0, ΔPB = 2.0, $\Delta T_{T_{4.5}}$ (low turbine inlet total temperature) = 30.0, and ΔP_{T_6} = 0.5. The results of this evaluation (Fig. 8(a)) show that the tracking of the five measurements is again very good. The final values of the bias estimates (Fig. 8(b)) are the sum of biases estimated in Fig. 7(b) and the biases placed on the simulated measurements as previously listed.

In Fig. 9, estimates of the unmeasured output variables ($\hat{y}_{aux}$) are compared with the actual values obtained from the SOAPP. The estimates show good tracking of the simulation values.

Simulation evaluations were then carried out for a degraded engine by simultaneously introducing the following deteriorations: (a) high turbine efficiency is 2.5 percent below nominal, (b) low turbine efficiency is 2.5 percent below nominal, (c) compressor airflow deviation is 1 lb/sec less than nominal, and (d) the fan airflow deviation is 5 lb/sec less than nominal.

The results for the simulated degraded engine are presented in Fig. 10. These results are similar to the results of Fig. 7 and demonstrate the adaptability and robustness of the proposed estimator to degraded engine performance. Again, the Kalman filter was not updated during the evaluation and the predicted constant values subtracted from the simulated data were the same as those for an engine that was not degraded.

Flight Data Evaluation

The Kalman filter formulation was also evaluated on flight data obtained on the NASA F-15 research aircraft. The flight data was obtained at Mach 0.90, an altitude of 30,000 ft, and a PLA of 43.5°. The time history of the test data (Fig. 11) starts with no bleed air being extracted from the test engine. Approximately 40 sec into the run, the pilot manually changed the bleed switch to extract all the aircraft bleed air requirements from the test engine. This maneuver was designed to simulate a change in engine operating efficiency. The engine control system increased fuel flow (W_F) to maintain the scheduled fan speed, resulting in an increase in $T_{T_{4.5}}$. After holding this bleed condition for approximately 70 sec, the bleed was again switched back to the initial no bleed air condition.

The Kalman filter estimation results are shown in Fig. 12. Figure 12(a) shows that the filter tracks the flight measurements accurately. Initial discrepancies occur because the bias estimates start at zero; however, this startup transient is brief, with good tracking occurring in approximately 20 sec. Although the tracking quality is slightly worse at the time the bleed switching occurs, the filter rapidly adapts to the simulated change in engine efficiency. The bias estimates, shown in Fig. 12(b), converge rapidly to steady-state values as the engine state is changed from one condition to another. The initial startup transient could be minimized by initializing the bias estimates with the actual values of the biases for the given flight condition.

Figure 13 shows the results from the proposed formulation compared with the corresponding results from the CDF formulation. The results were obtained using the flight data shown in Fig. 11. The results show that the performance obtained by the proposed method compares favorably with the CDF procedure. A significantly improved startup transient performance is evident. Figure 14 presents similar comparisons for the estimates of normally unmeasured output variables. Figure 14(a) shows the estimate of compressor inlet total temperature ($T_{T_{2.5}}$) and the measured values. The superiority of the proposed formulation is clearly evident, if the measurement of $T_{T_{2.5}}$ is considered reliable. Figure 14(b) shows the comparative estimates of corrected fan airflow (WC_{FAN}). The values are comparable, with better transient performance for the proposed formulation.

Concluding Remarks

An approach has been proposed to estimate the unmeasured or auxiliary output variables of a turbofan F100 engine by using Kalman filter concepts. The approach is based on explicitly modeling the effects of off-nominal engine behavior as biases on the measured output variables. Results are presented for estimates of the output variables and are compared with values obtained from detailed nonlinear simulation of the engine. The evaluation was carried out for both a nominal engine and an engine in which intentional deterioration was introduced. The proposed filter was also evaluated for output estimation using actual F-15 flight data.

The formulation is robust with respect to the value of state covariance matrix Q. A critical component of the performance seeking control (PSC) problem for the F100 engine is determining consistent values for auxiliary output variables. Consistent estimates for the states were obtained for different values of Q and thus consistent estimates of the auxiliary output variables are ensured.

The proposed estimation algorithm was able to accurately predict the values of the output variables for the simulation studies for both nominal and degraded engine conditions. The proposed algorithm has been validated by comparing its estimates with the values from the detailed nonlinear simulation, and it has performed well on flight data. A comparative study of the proposed algorithm results with component deviation factors (CDF) results gave additional proof of the validity of the concept. Unlike the CDF method, the proposed algorithm does not require detailed modeling of the engine degradation process. This formulation has a wide range of application because it is not restricted or tailored to the particular application described in this paper.

References

[1] Tich, Eric J., Shaw, Peter D., Berg, Donald F., Adhibatla, Shrider, Swan, Jerry A., and Skira, Charles A., "Performance Seeking Control for Cruise Optimization in Fighter Aircraft," AIAA-87-1929, June 1987.

[2] Burcham, Frank W., Jr., Gilyard, Glenn B., and Myers, Lawrence P., "Propulsion System/Flight Control Integration and Technology Transition," AIAA-90-2280, July 1990.

[3] Luppold, R.H., Gallops, G.W., Kerr, L.J., and Roman, J.R., "Estimating In-Flight Engine Performance Variations Using Kalman Filter Concepts," AIAA-89-2584, July 1989.

[4] Berg, D.F., Swan, J.A., Ahdibatlar, S., Shaw, P.D., and Tich, E.J., "Performance Seeking Control Volume 1: Final Report," AFWAL-TR-88-2067, Oct. 1989.

[5] Friedland, Bernard, "Treatment of Bias in Recursive Filtering," *IEEE Transactions on Automatic Control*, vol. AC-14, no. 4, Aug. 1969, pp. 359–367.

[6] Maine, Trindel A., Gilyard, Glenn B., and Lambert, Heather H., "A Preliminary Evaluation of an

F100 Engine Parameter Estimation Process Using Flight Data," AIAA-90-1921, July 1990.

[7] Myers, Lawrence P., and Burcham, Frank W., Jr., "Preliminary Flight Test Results of the F100 EMD Engine in an F-15 Airplane," NASA TM-85902, 1984.

[8] Luenberger, David G., "An Introduction to Observers," *IEEE Transactions on Automatic Control*, vol. AC-16, no. 6, Dec. 1971, pp. 596–602.

[9] Kalman, R.E., and Bucy, R.S., "New Results in Linear Filtering and Prediction Theory," *J. Basic Engineering Transactions ASME, Ser. D.*, March 1961, no. 83, pp. 95–108.

[10] Sorenson, Harold W., "Kalman Filtering: Theory and Application," *IEEE Press*, New York, 1985.

[11] Kwakernaak, Huibert, and Sivan, Raphael, *Linear Optimal Control Systems*, Wiley InterScience, New York, 1972.

[12] Maybeck, Peter S., *Stochastic Models, Estimation and Control*, vol. 2, Academic Press, New York, 1982.

Appendix—State Variable Auxiliary Output Estimation Formulation for an F100 Engine

For the system being considered, the complete state variable model is

$$\delta\dot{z} = A_1\delta z + B_1\delta u + Gw_1$$
$$\delta y = C_1\delta z + D\delta u + w_2$$

where 1 indicates augmented system matrices, and

$$\delta z = \begin{vmatrix} \delta N_1 \\ \delta N_2 \\ \delta TMT \\ N_{1_b} \\ N_{2_b} \\ P_{T_{6_b}} \\ PB \\ T_{T_{4.5_b}} \end{vmatrix} \quad \delta u = \begin{vmatrix} \delta W_F \\ \delta A_J \\ \delta CIVV \\ \delta RCVV \end{vmatrix} \quad \delta y = \begin{vmatrix} \delta N_1 \\ \delta N_2 \\ \delta P_{T_6} \\ \delta PB \\ \delta T_{T_{4.5}} \end{vmatrix}$$

where TMT is the turbine metal temperature, b denotes the output bias term, $CIVV$ is the fan inlet guide vane angle, $RCVV$ is the compressor stator vane angle, and

$$A_1 = \begin{bmatrix} A & \vdots & 0 \\ \cdots & & \cdots \\ 0 & \vdots & 0 \end{bmatrix} \quad B_1 = \begin{bmatrix} B \\ \cdots \\ 0 \end{bmatrix}$$

$$C_1 = [C \ \vdots \ I] \quad G = \begin{bmatrix} I \\ \cdots \\ 0 \end{bmatrix}$$

where A, B, C, and D are constant perturbation matrices, numerically derived from the SOAPP, w_1 is the state noise with covariance Q, and w_2 is the measurement noise with covariance R. The elements of R are obtained from *a priori* flight data, while those of Q are selected by trial and error.

The auxiliary set of unmeasured output variables ($\hat{y}_{aux}$) listed in Table 1, is given by

$$\hat{y}_{aux} = H\delta z + F\delta u + y_t$$

where

$$H = [H_1 \ \vdots \ H_2]$$

and H_2 reflects the effect of estimated biases and its elements are derived from the SVM, H_1 and F are perturbation matrices derived from the SOAPP, and y_t is the vector of predicted trim values for the auxiliary output variables, which is obtained from the SVM.

Table 1. Linear auxiliary output variables, PSC algorithm requirements.

$P_{T_{2.5}}$	compressor inlet total pressure
PB	burner static pressure
P_{T_6}	afterburner inlet total pressure
$T_{T_{2.5}}$	compressor inlet total temperature
T_{T_3}	burner inlet total temperature
T_{T_4}	burner exit total temperature
$T_{T_{4.5}}$	low turbine inlet total temperature
T_{T_6}	afterburner inlet total temperature
WC_{FAN}	corrected fan air flow
WC_{HPC}	corrected compressor air flow

Table 2. Nonlinear engine variables.

D_{NOZ}	nozzle drag
D_{RAM}	ram drag
F_G	gross thrust
F_{NP}	net propulsive force
P_{T_7}	nozzle throat total pressure
SM_F	fan stall margin
SM_{HC}	high compressor stall margin
T_{T_7}	nozzle throat total temperature

Table 3. Measurement noise statistics.

Parameter	Standard deviation
N_1	7 rpm
N_2	7 rpm
P_{T_6}	0.3 lb/in
P_{T_4}	0.6 lb/in
$T_{T_{4.5}}$	4 °R

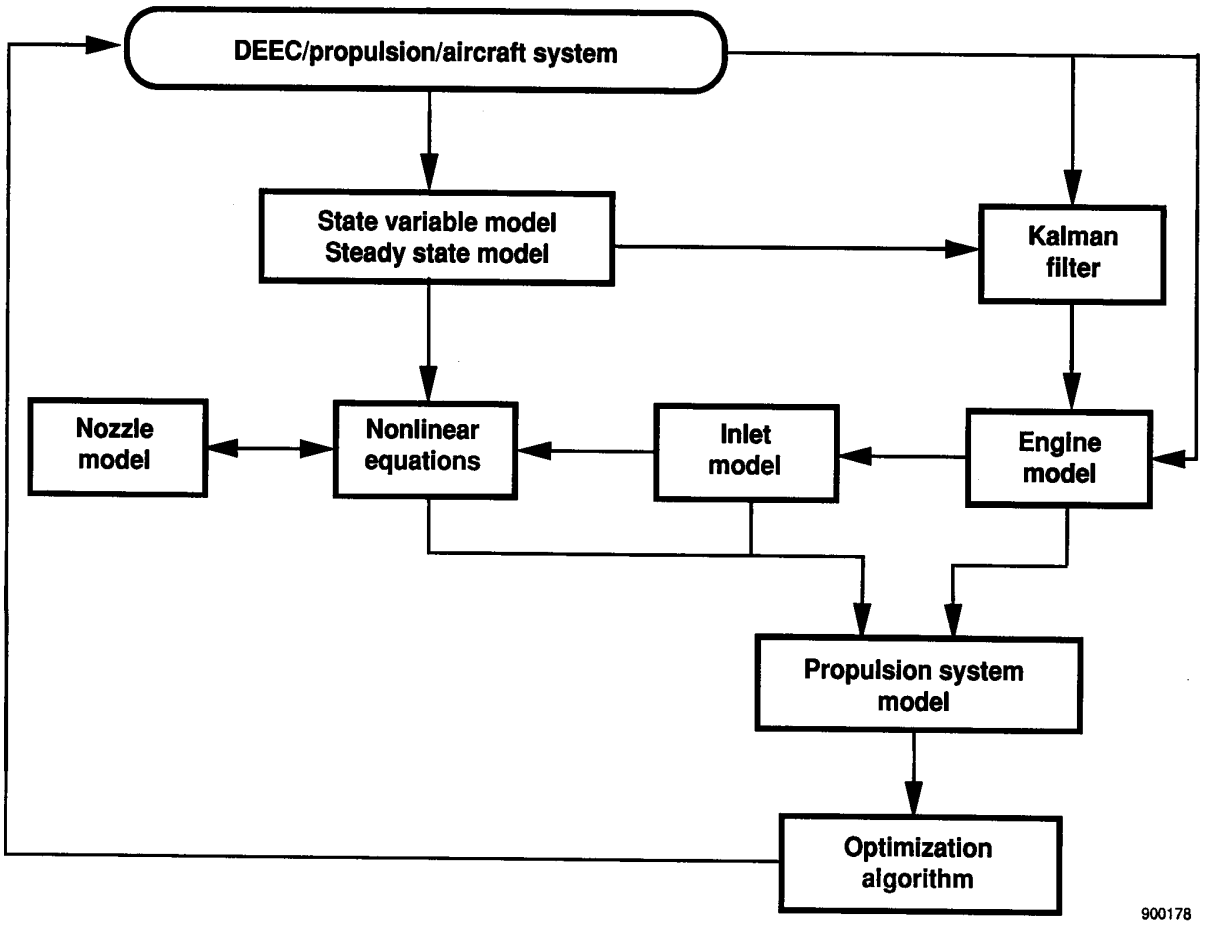

Fig. 1 The performance seeking control adaptive control system.

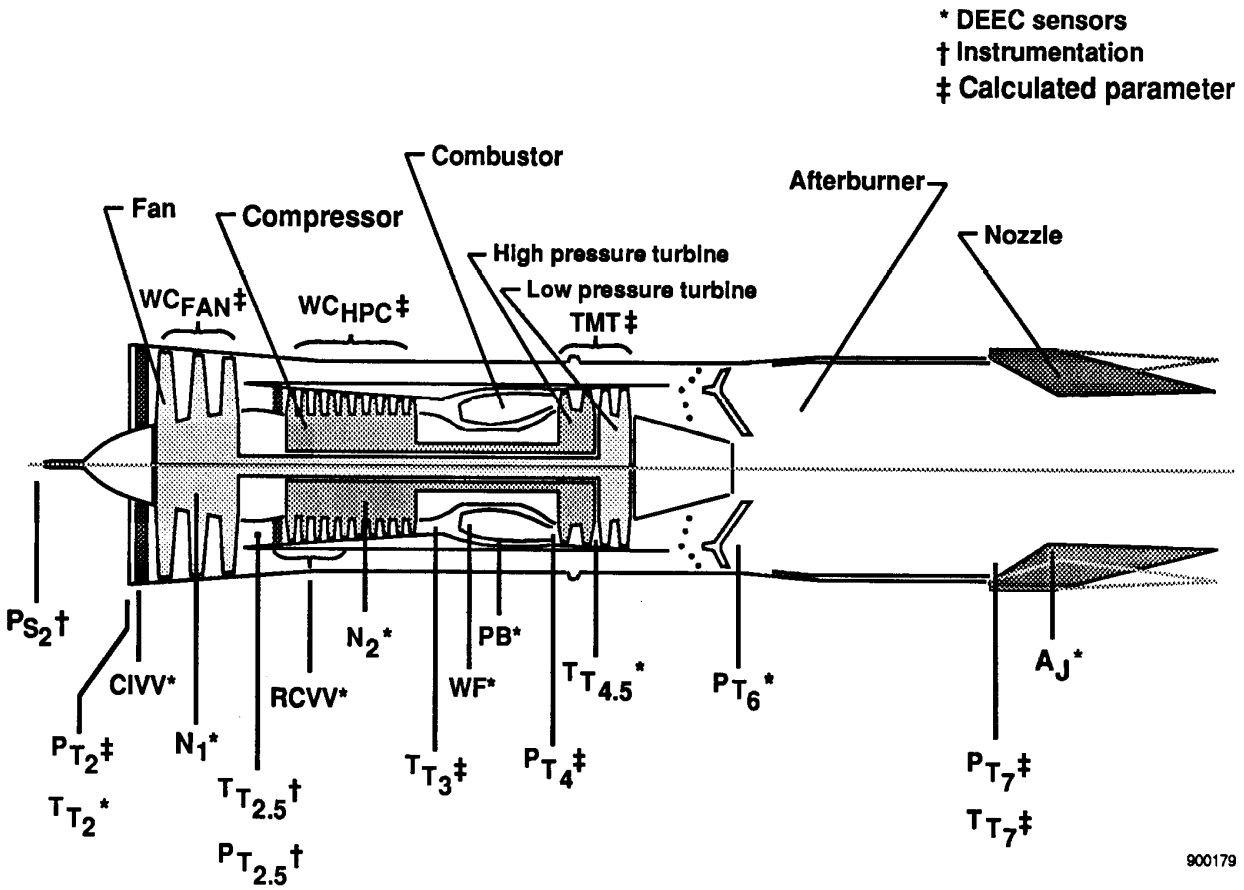

Fig. 2 The F100 engine and sensor locations.

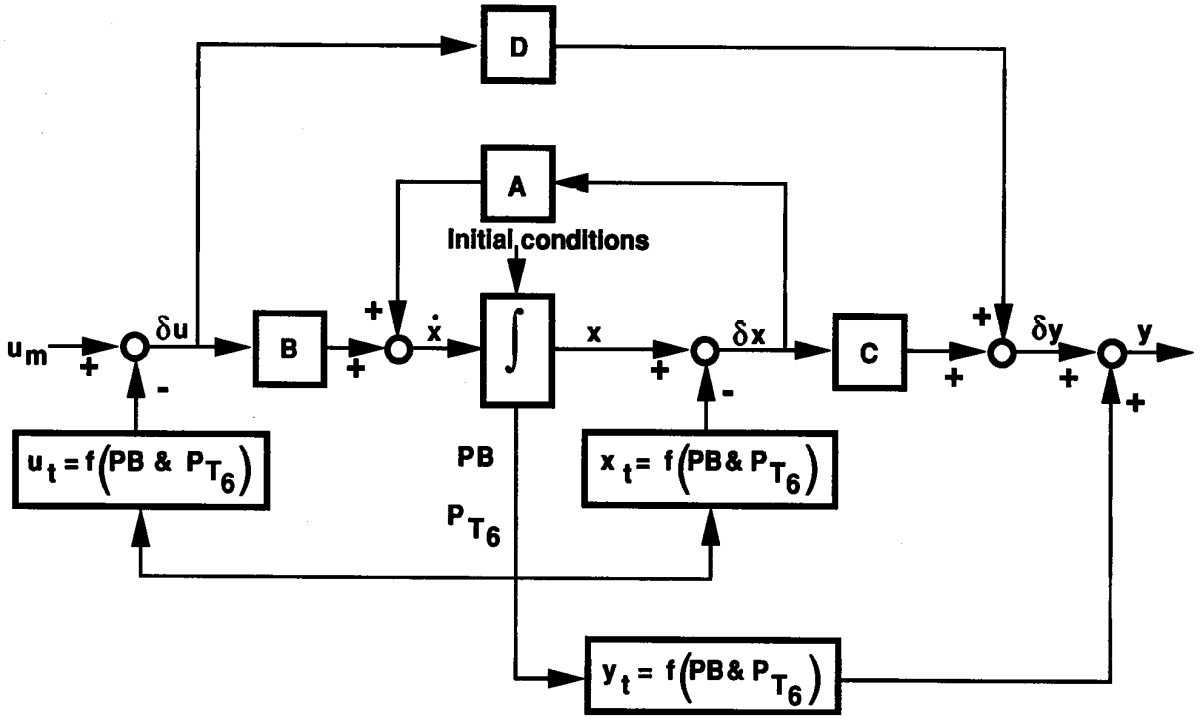

x vector

- Fan rotor speed, N_1
- Core rotor speed, N_2
- Turbine metal temperature, TMT

u vector

- Main burner fuel flow, W_F
- Nozzle area, A_J
- Fan inlet guide vane angle, CIVV
- Compressor stator vane angle, RCVV

y vector

- Fan rotor speed, N_1
- Core rotor speed, N_2
- Afterburner inlet total pressure, P_{T_6}
- Burner static pressure, PB
- Low turbine inlet temperature, $T_{T_{4.5}}$

900180

Fig. 3 The F100 engine simulation based on the state variable model.

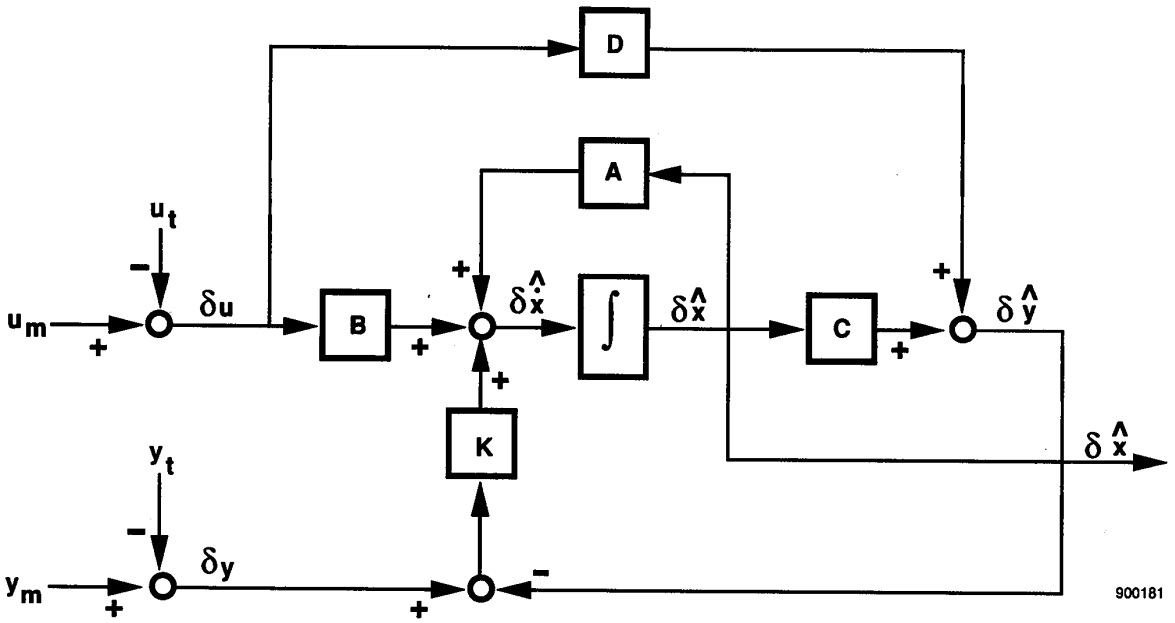

Fig. 4 The Kalman filter structure.

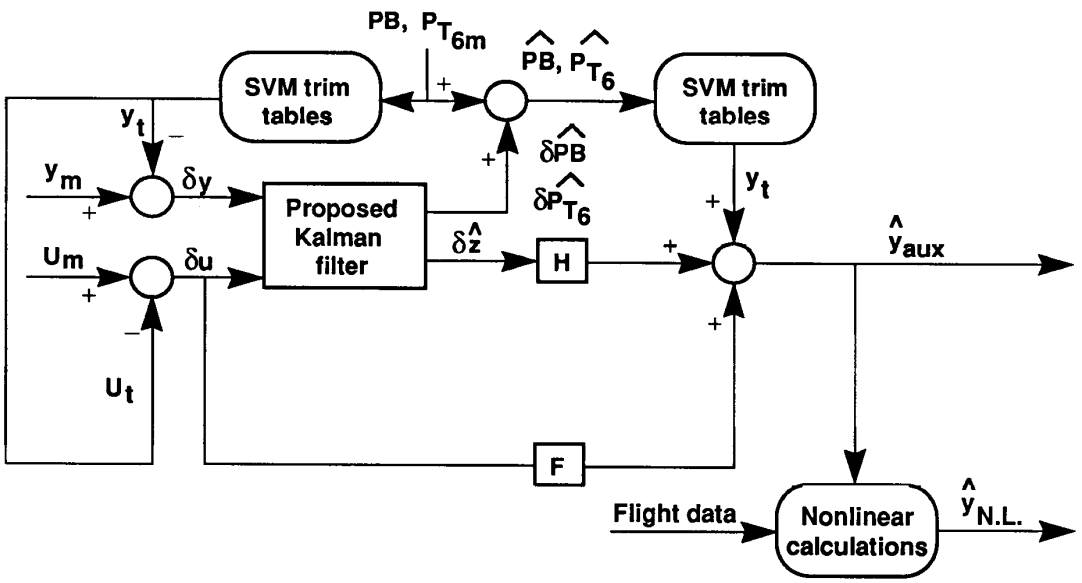

$$\hat{Z} = \left[N_1, N_2, TMT, N_{1b}, N_{2b}, P_{T_{6b}}, PB_b, T_{T_{4.5b}}\right]'$$

$$u = \left[W_F, A_J, CIVV, RCVV\right]'$$

$$y = \left[N_1, N_2, PB, P_{T_6}, T_{T_{4.5}}\right]'$$

$$\hat{y}_{aux} = \left[P_{T_{2.5}}, T_{T_{2.5}}, T_{T_3}, T_{T_4}, T_{T_6}, WC_{FAN}, WC_{HPCZ}\right]'$$

$$\hat{y}_{N.L.} = \left[SM_F, SM_{HC}, D_{RAM}, D_{NOZ}, F_{NP}, F_G, T_{T_7}, P_{T_7}\right]'$$

900182

Fig. 5 Modified estimation process using the proposed Kalman filter.

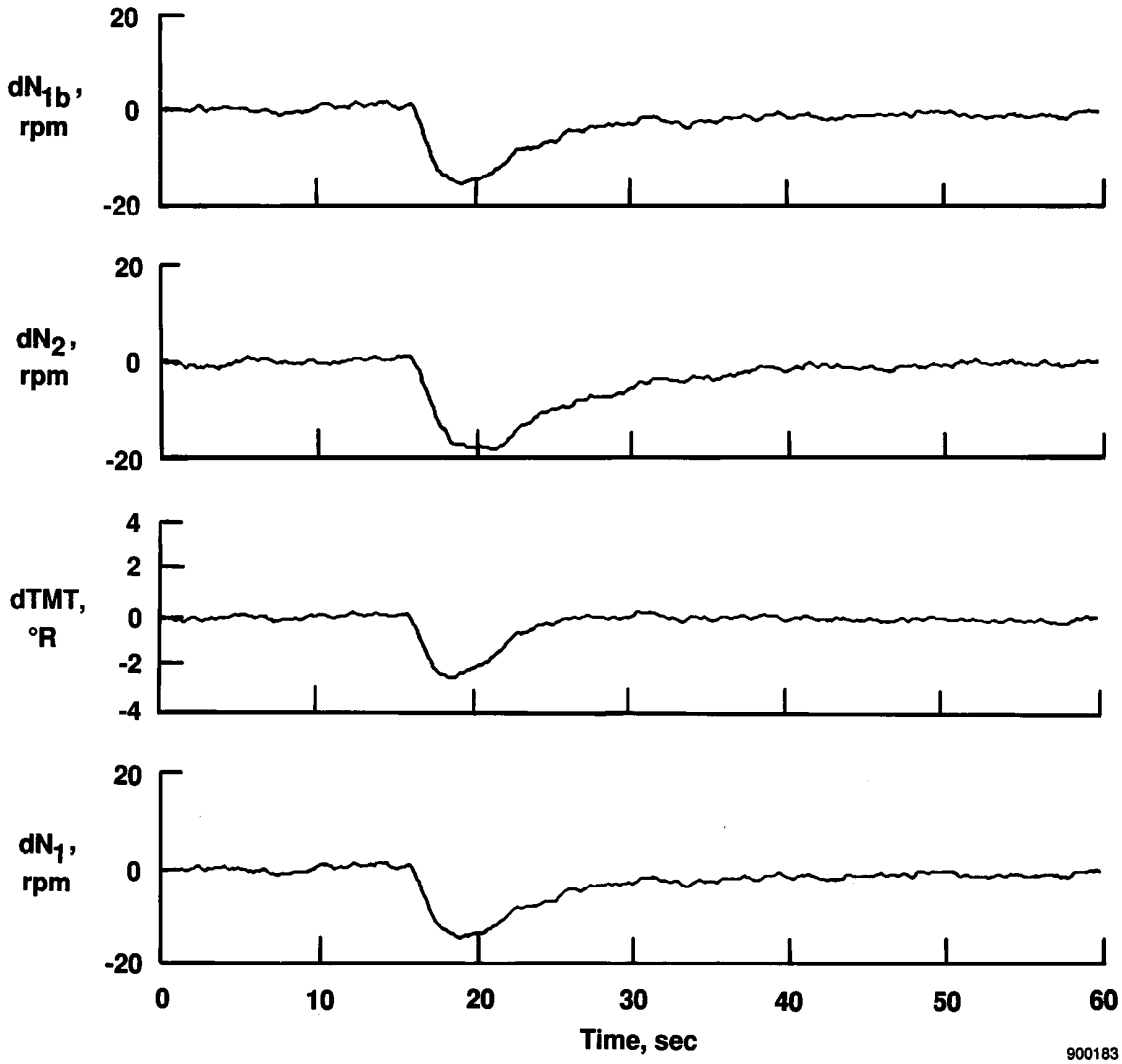

Fig. 6 The F100 engine simulation state estimates for a nominal engine at Q = I and Q = 10I, PLA increased from 37° to 43° at 15 sec.

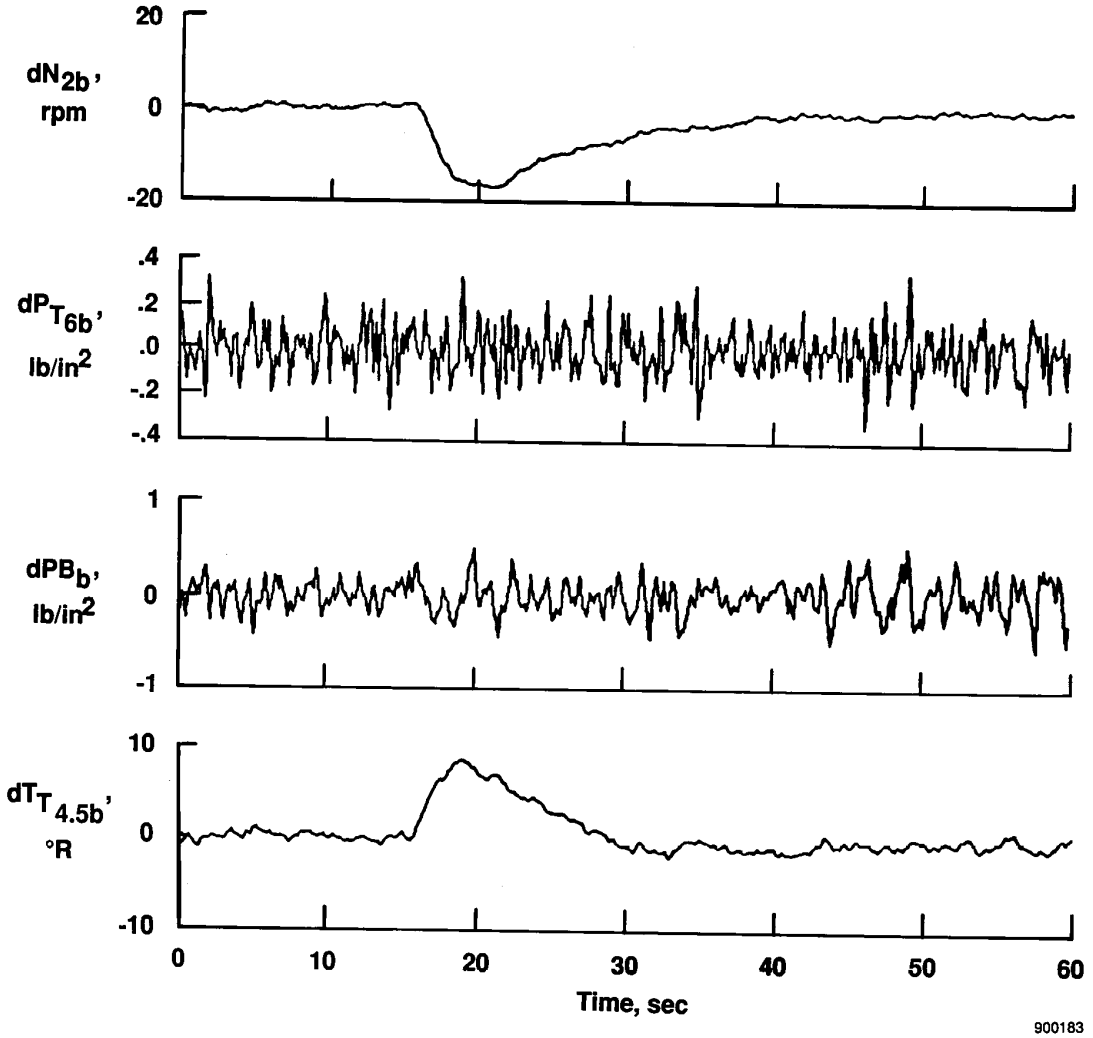

Fig. 6 Concluded.

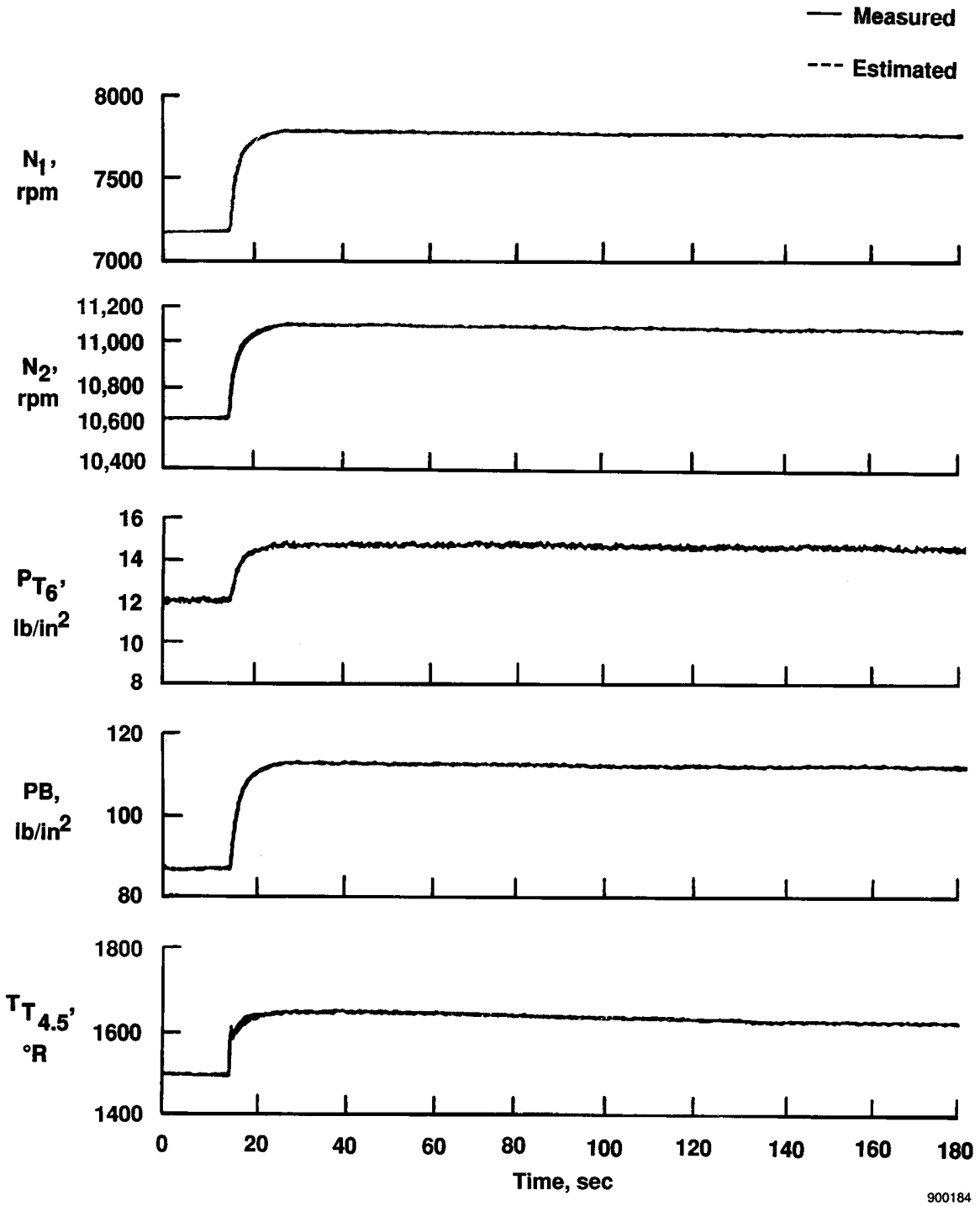

(a) Measured and estimated engine outputs.

Fig. 7 The F100 engine simulation parameters for a nominal engine, with PLA increased from 37° to 43° at 15 sec.

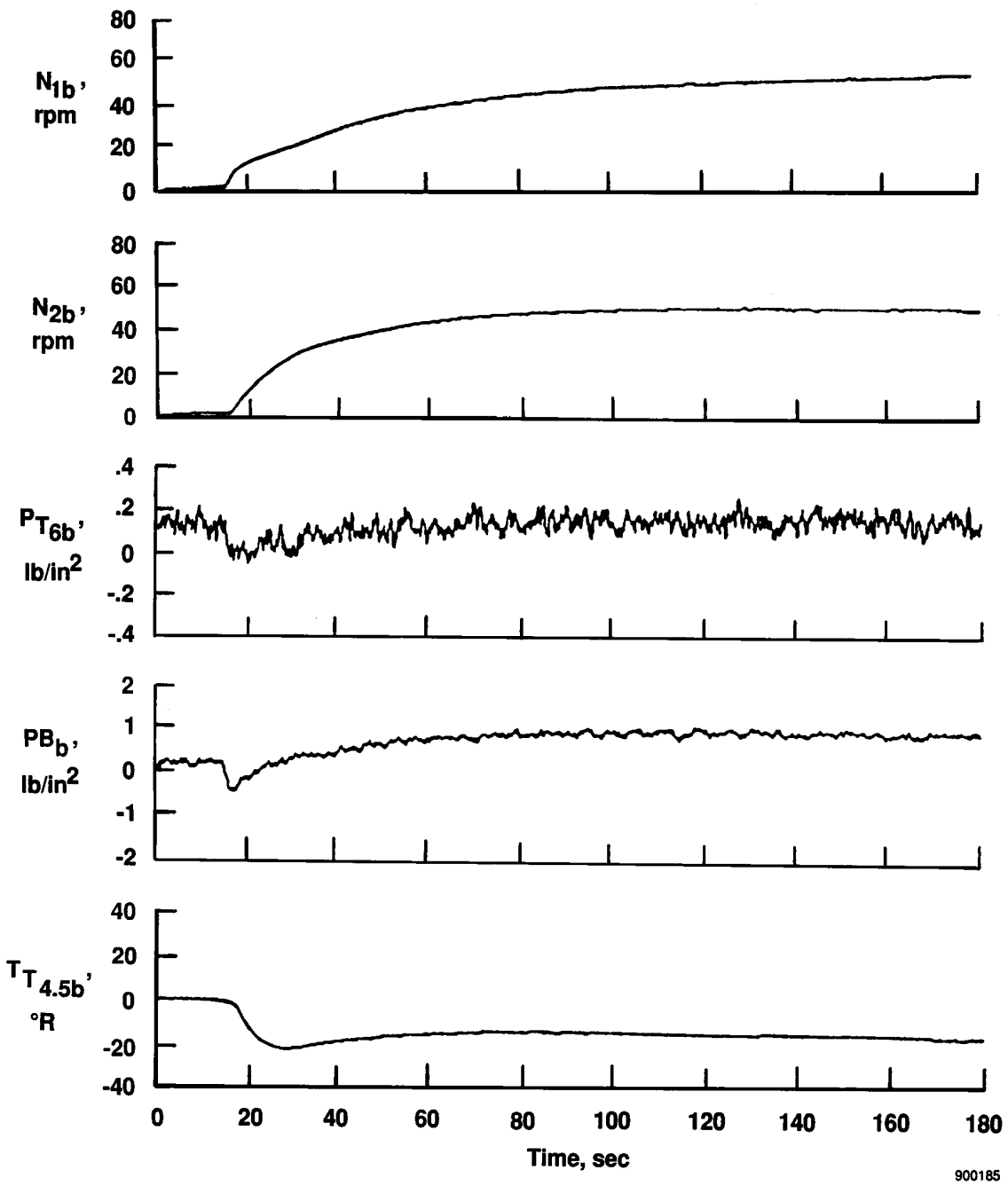

(b) Bias estimates.

Fig. 7 Concluded.

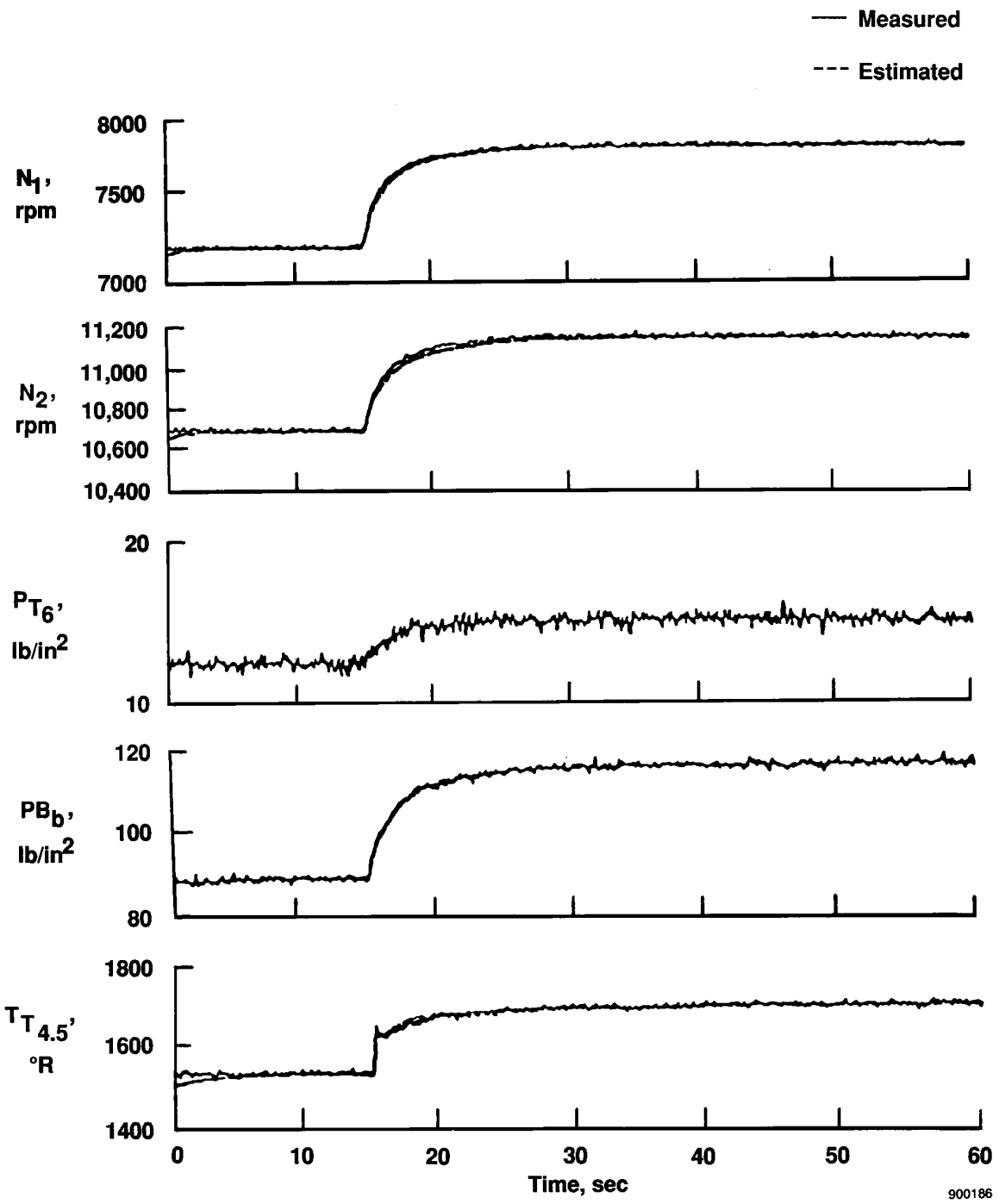

(a) Measured and estimated engine outputs.

Fig. 8 The F100 engine simulation parameter estimates with biased measurements for a nominal engine, with PLA increased from 37° to 43° at 15 sec.

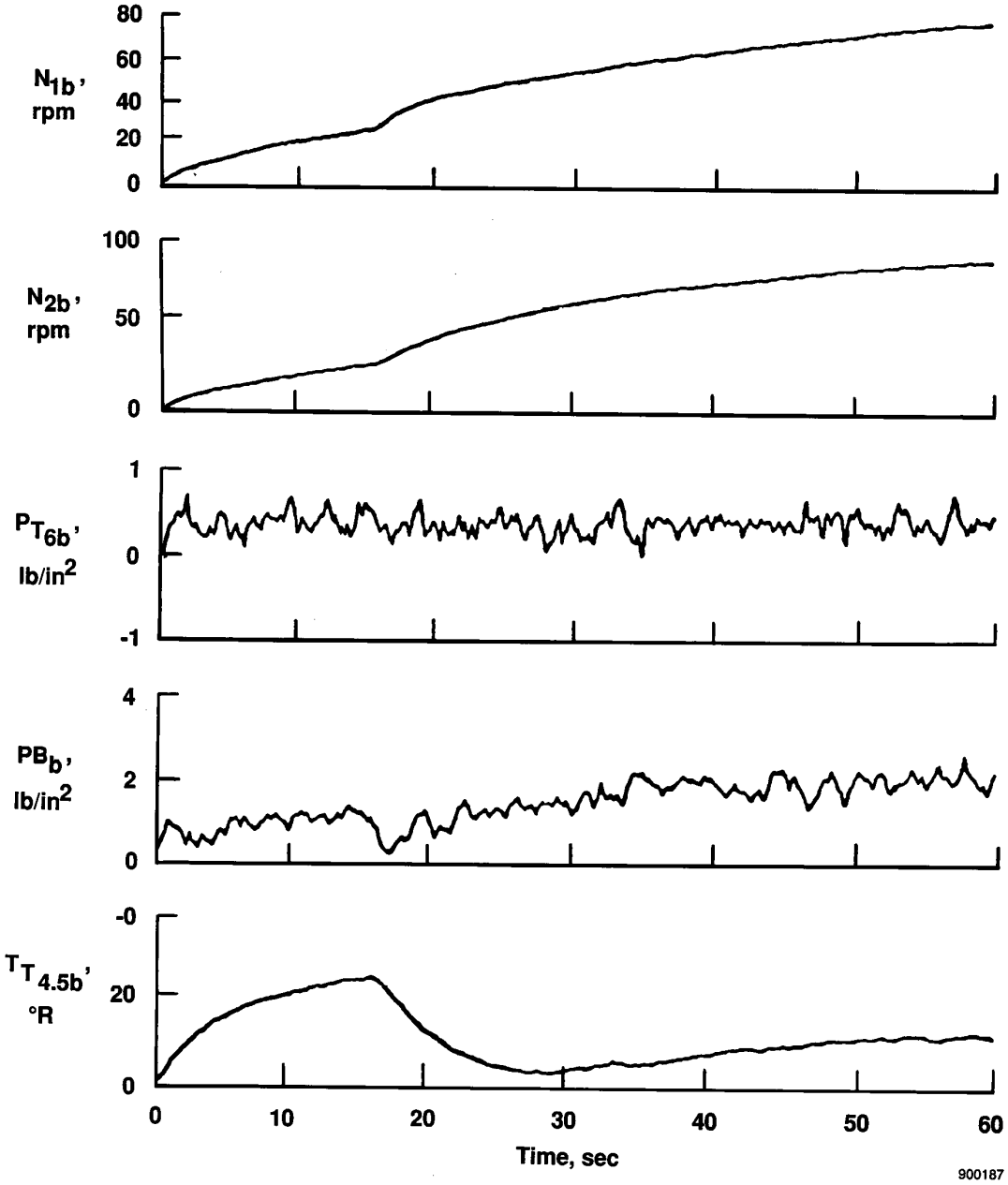

(b) Bias estimates.

Fig. 8 Concluded.

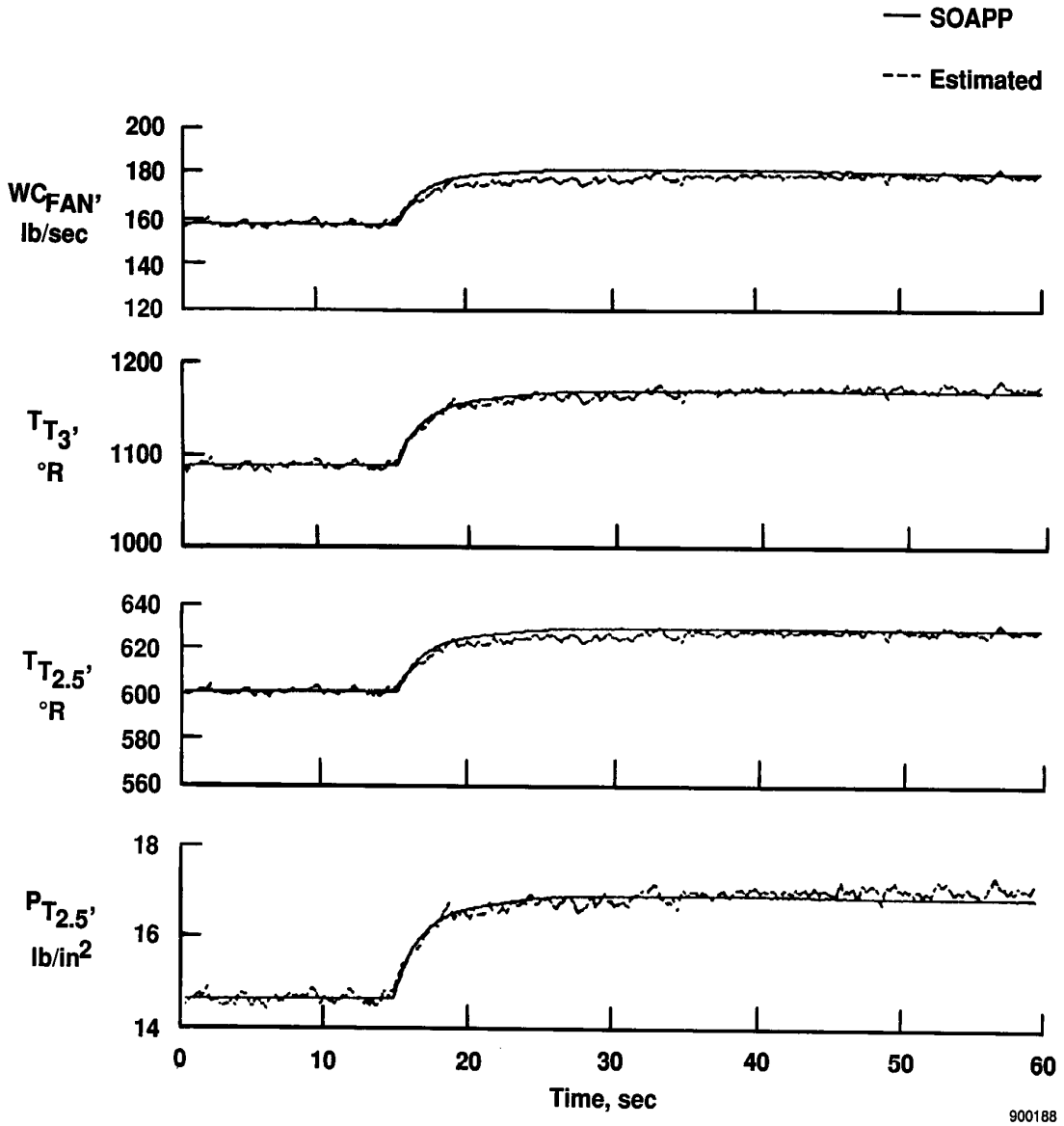

Fig. 9 The F100 engine simulation auxiliary output estimates for a nominal engine, with PLA increased from 37° to 43° at 15 sec.

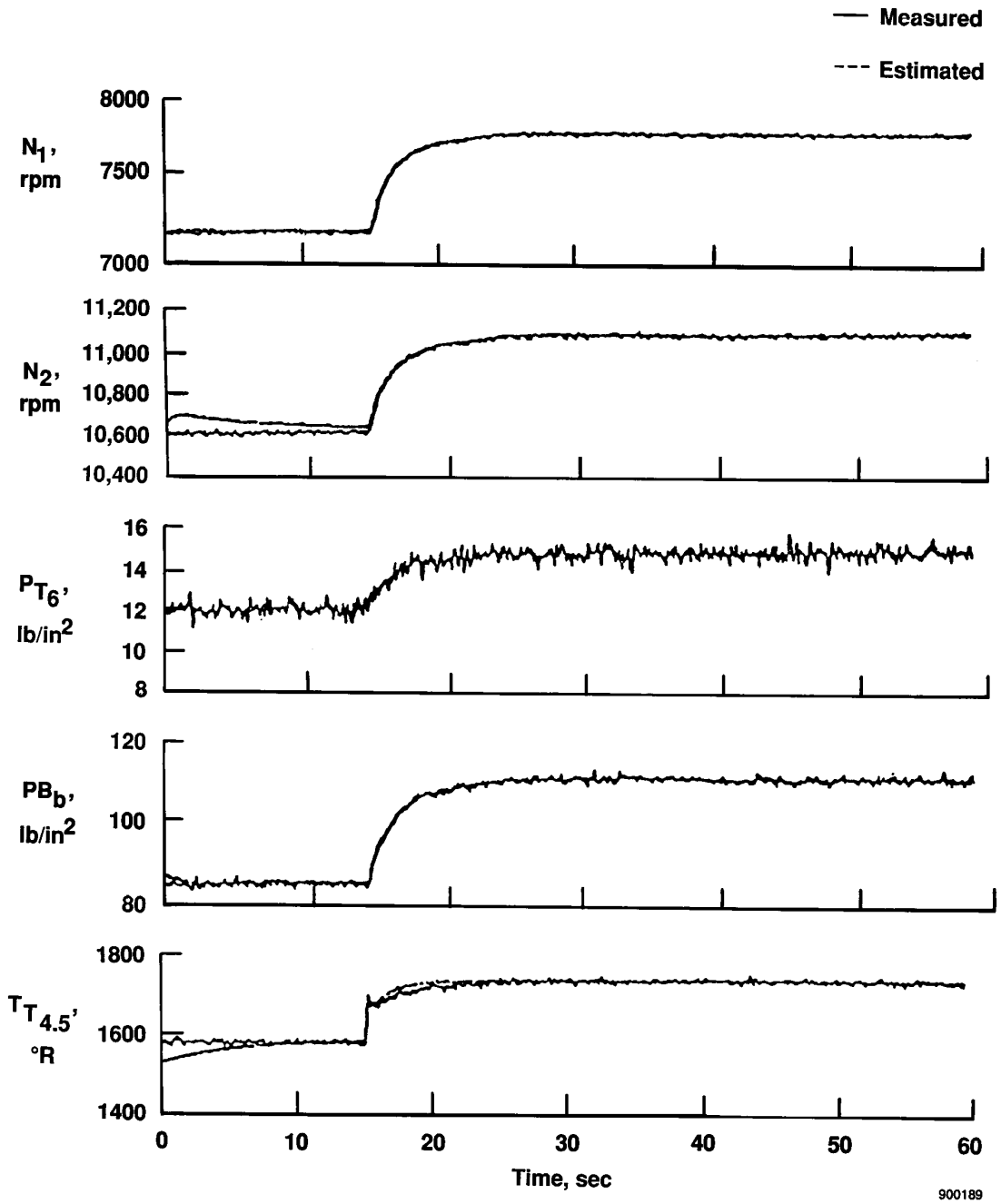

(a) Engine output estimates.

Fig. 10 The F100 engine simulation parameter estimates for a deteriorated engine, with PLA increased from 37° to 43° at 15 sec.

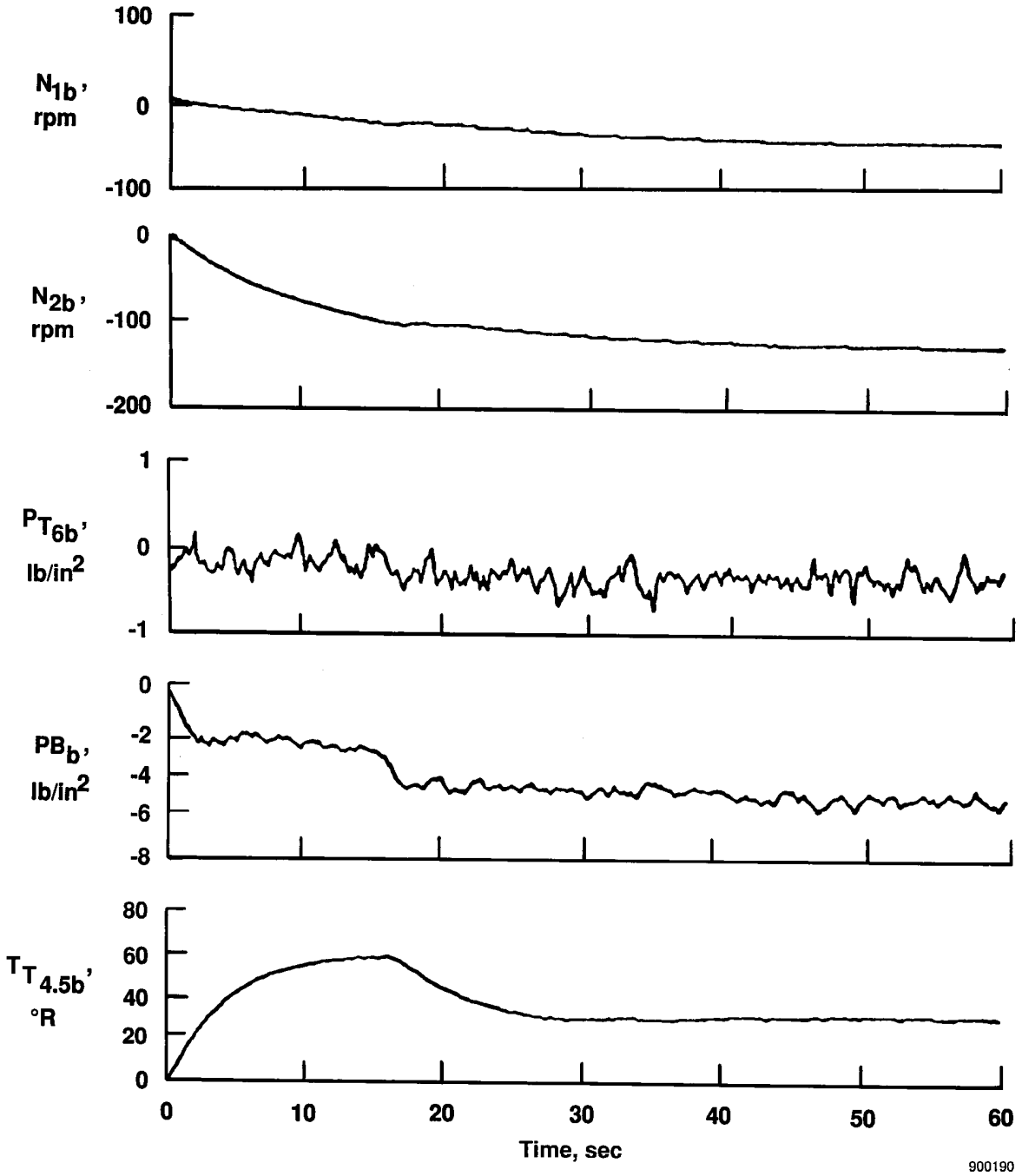

(b) Bias estimates.

Fig. 10 Concluded.

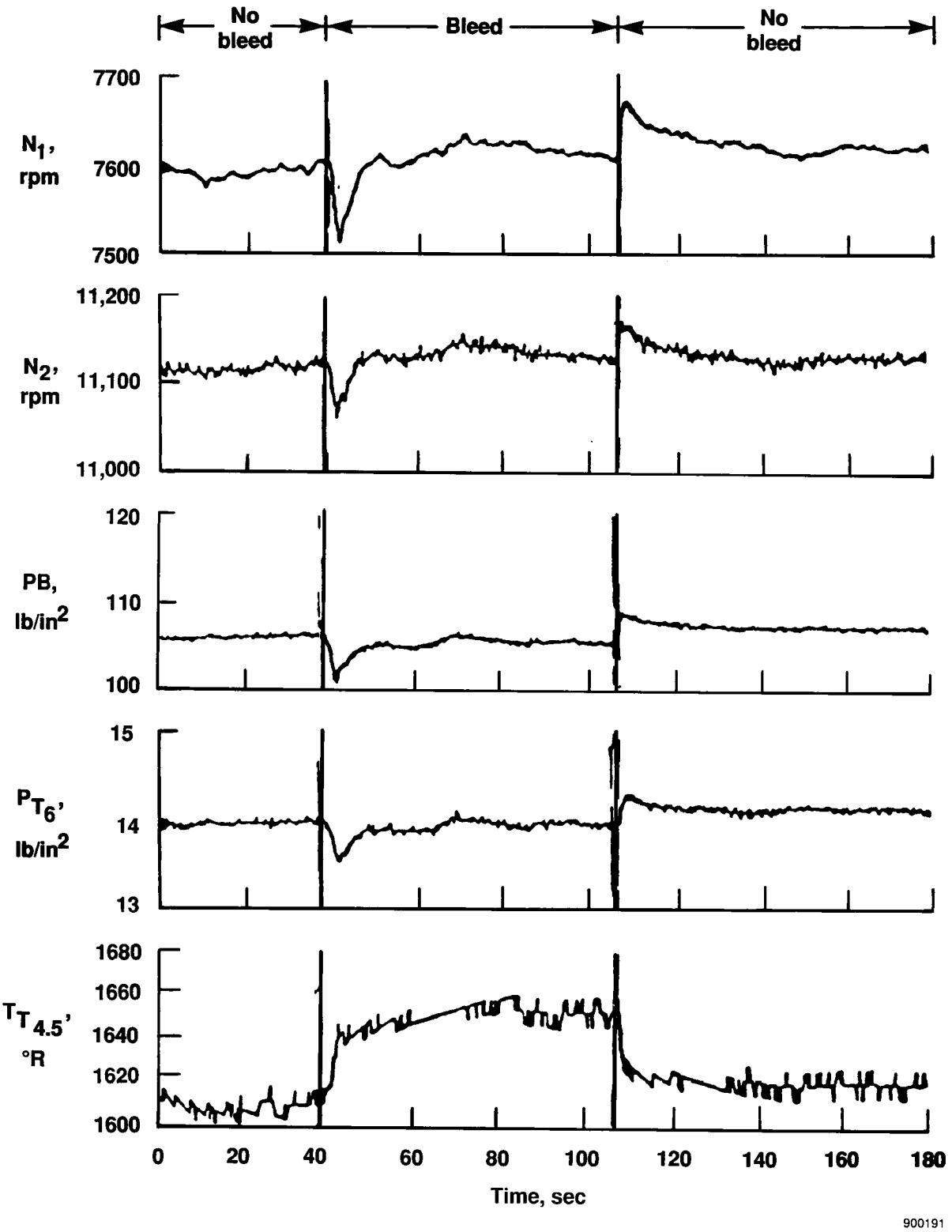

(a) Measured output variables.

Fig. 11 The F-15 airplane measured engine parameters during compressor bleed variations at Mach 0.90, an altitude of 30,000 ft, and PLA = 43°.

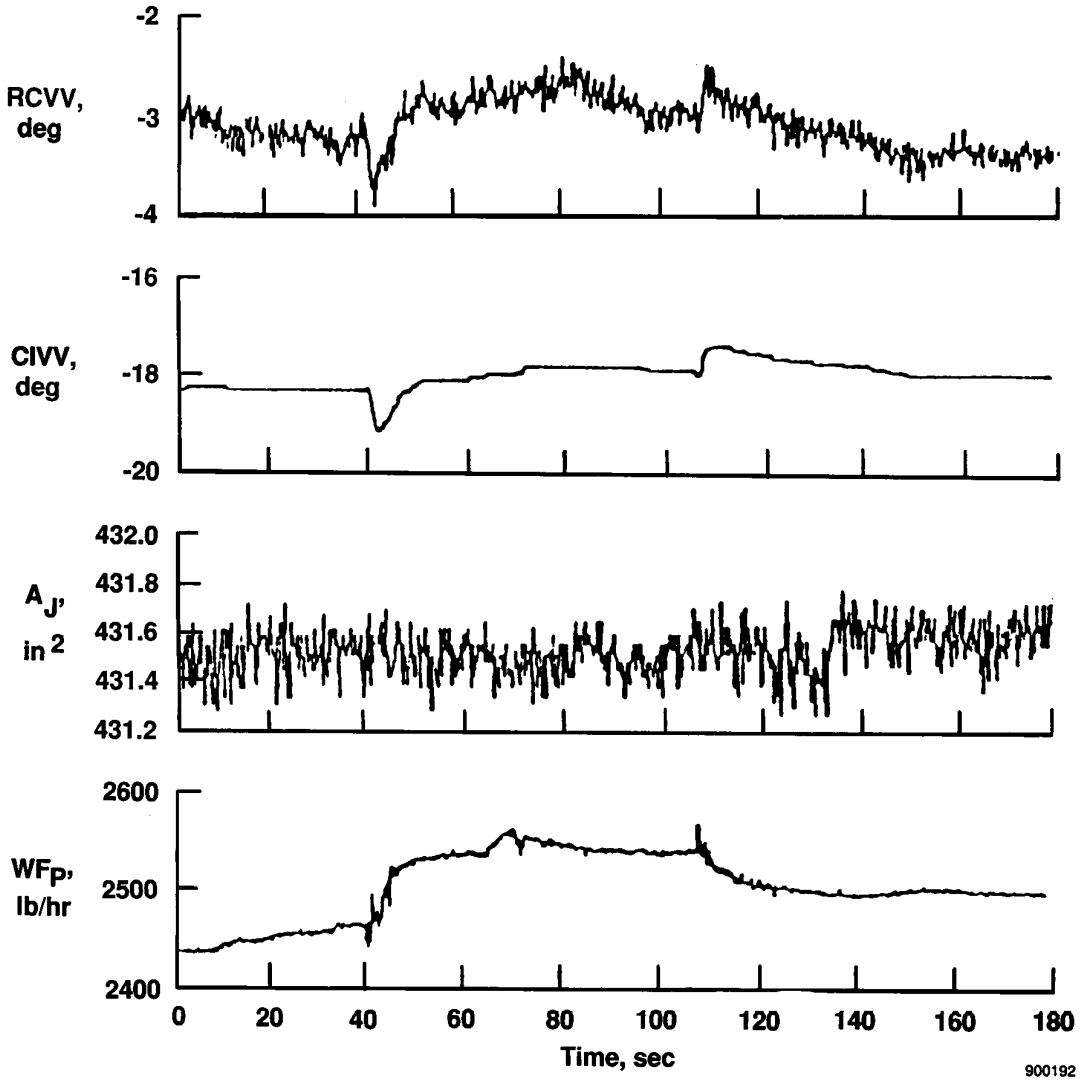

(b) Measured control variables.

Fig. 11 Concluded.

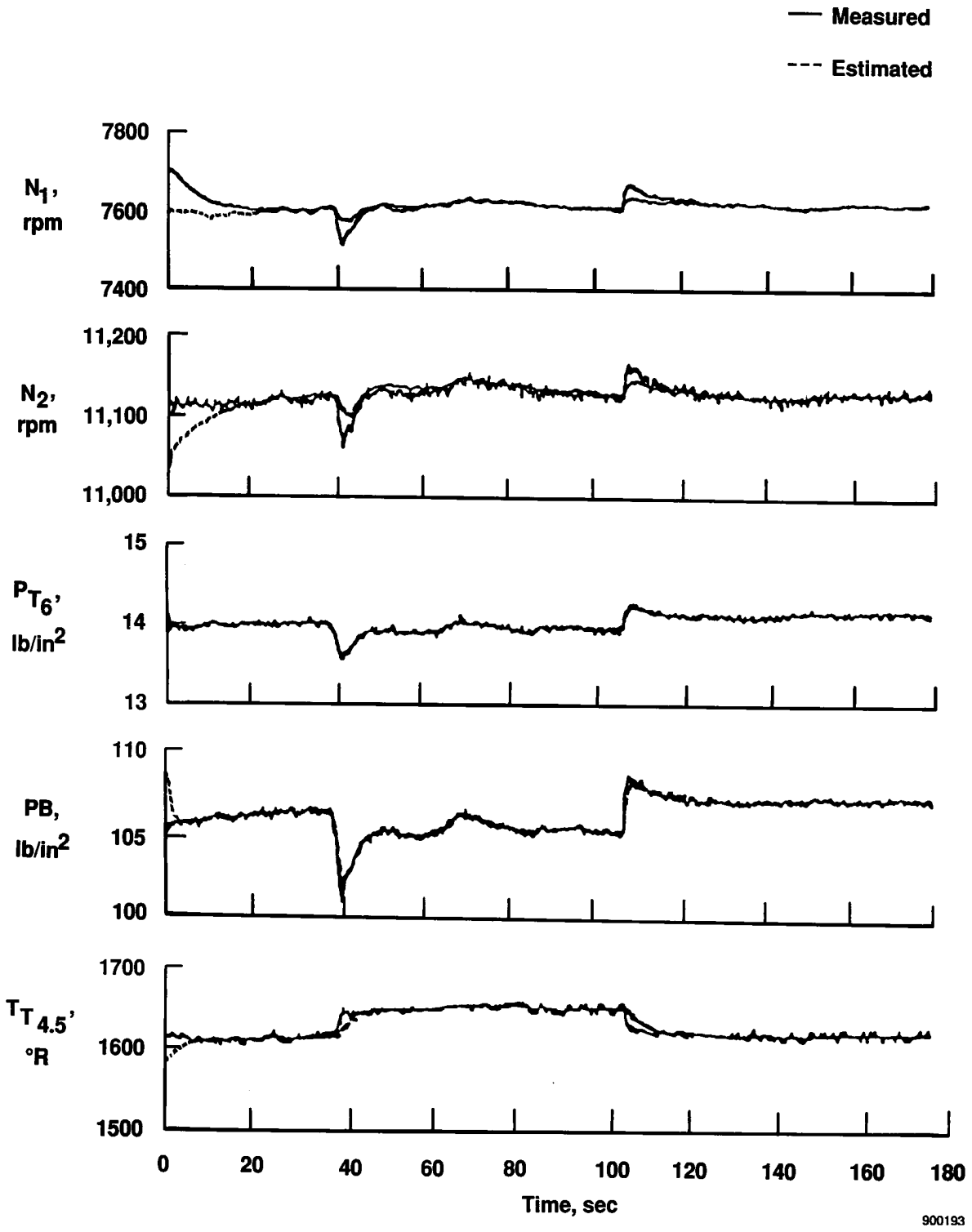

(a) Output estimates.

Fig. 12 The F100 engine parameter estimates from the flight data in Fig. 11.

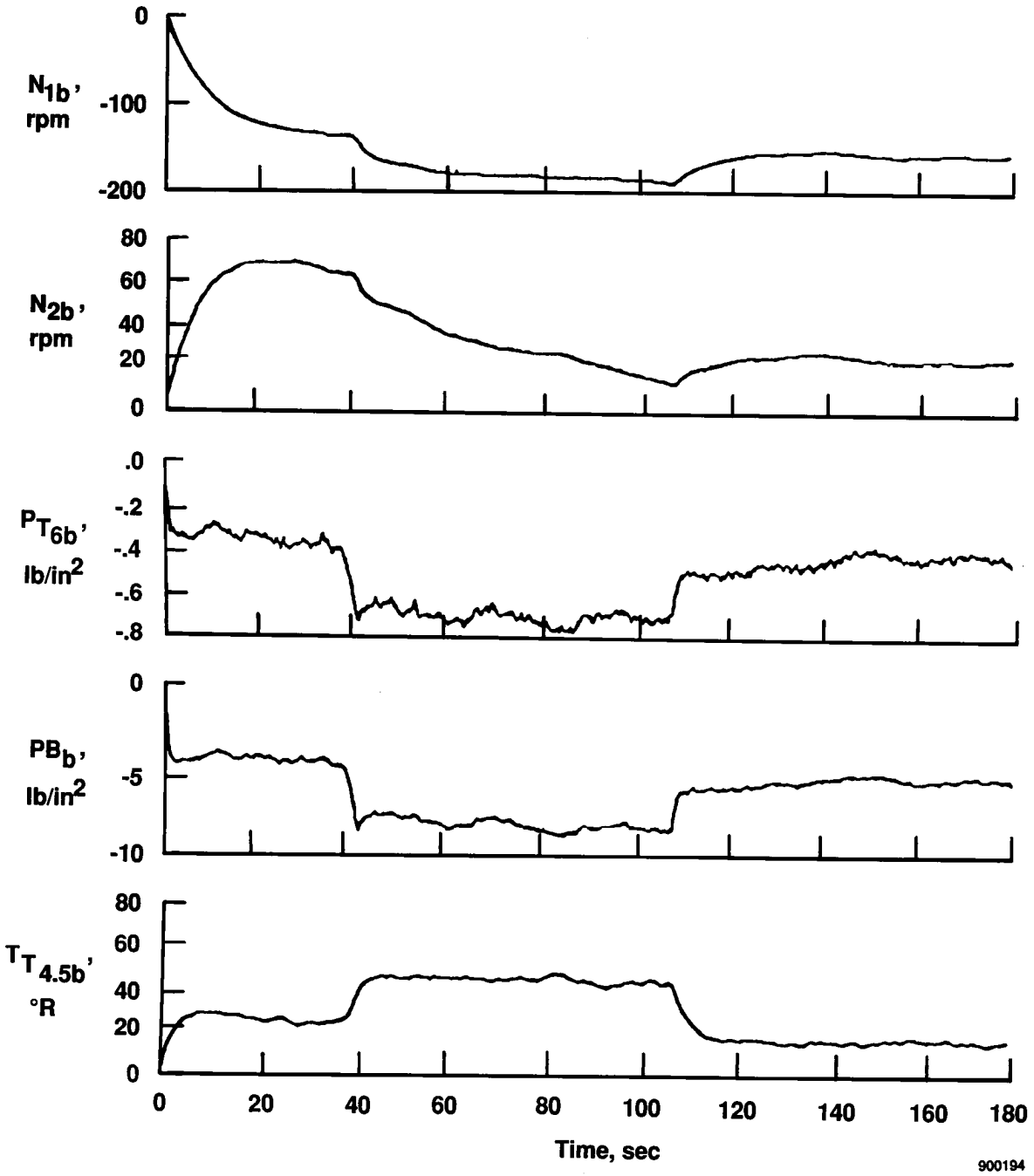

(b) Bias estimates.

Fig. 12 Concluded.

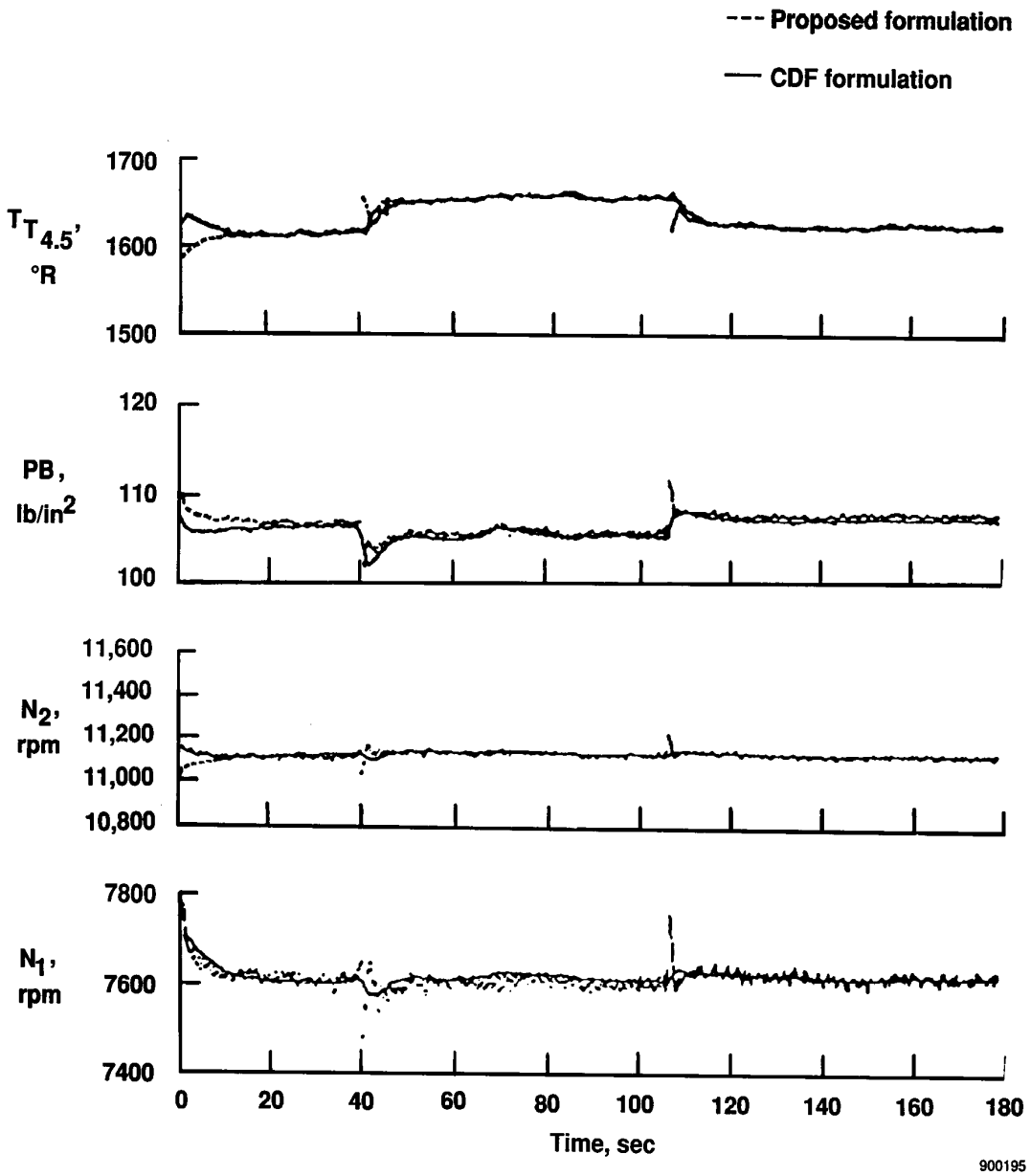

Fig. 13 Proposed formulation estimated outputs from flight data compared with CDF formulation estimates from flight data.

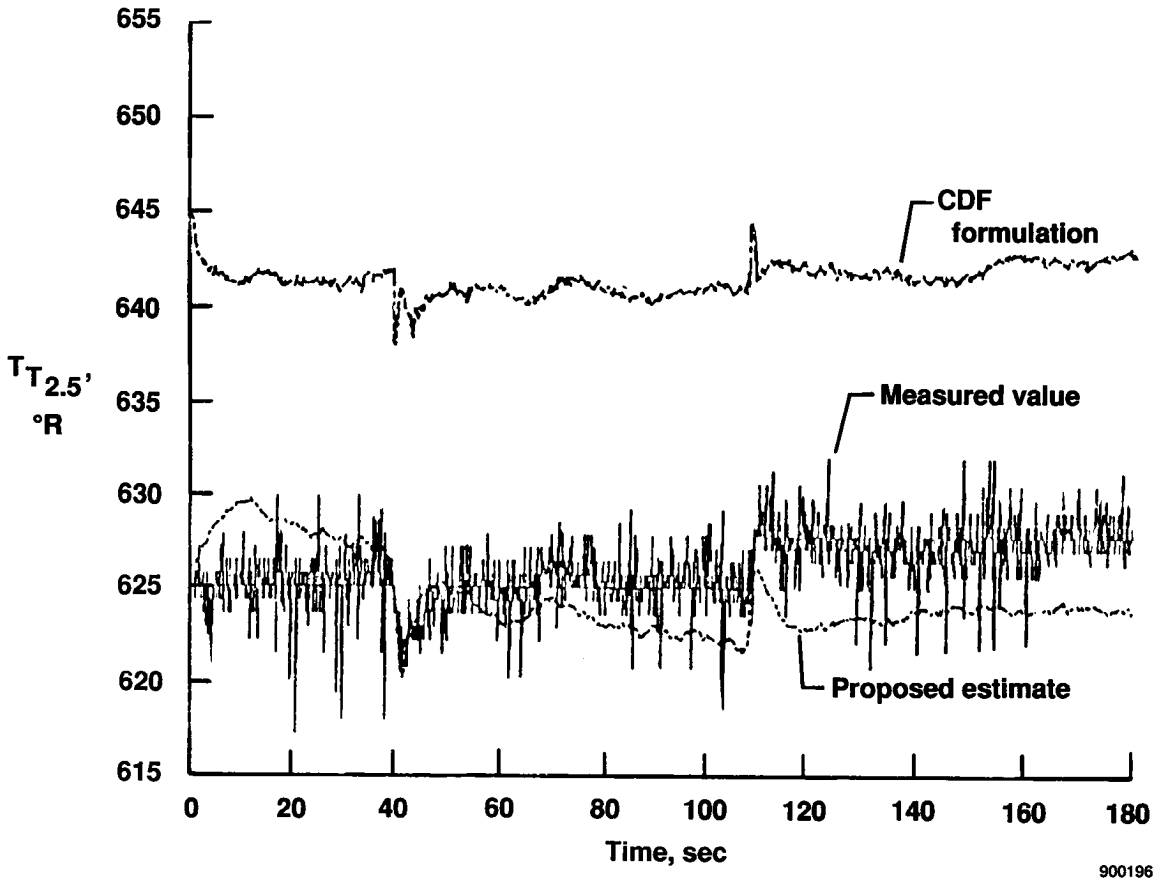

(a) Compressor inlet total temperature estimates.

Fig. 14 The proposed formulation and the CDF formulation engine parameter estimates from flight data compared with measured engine parameters.

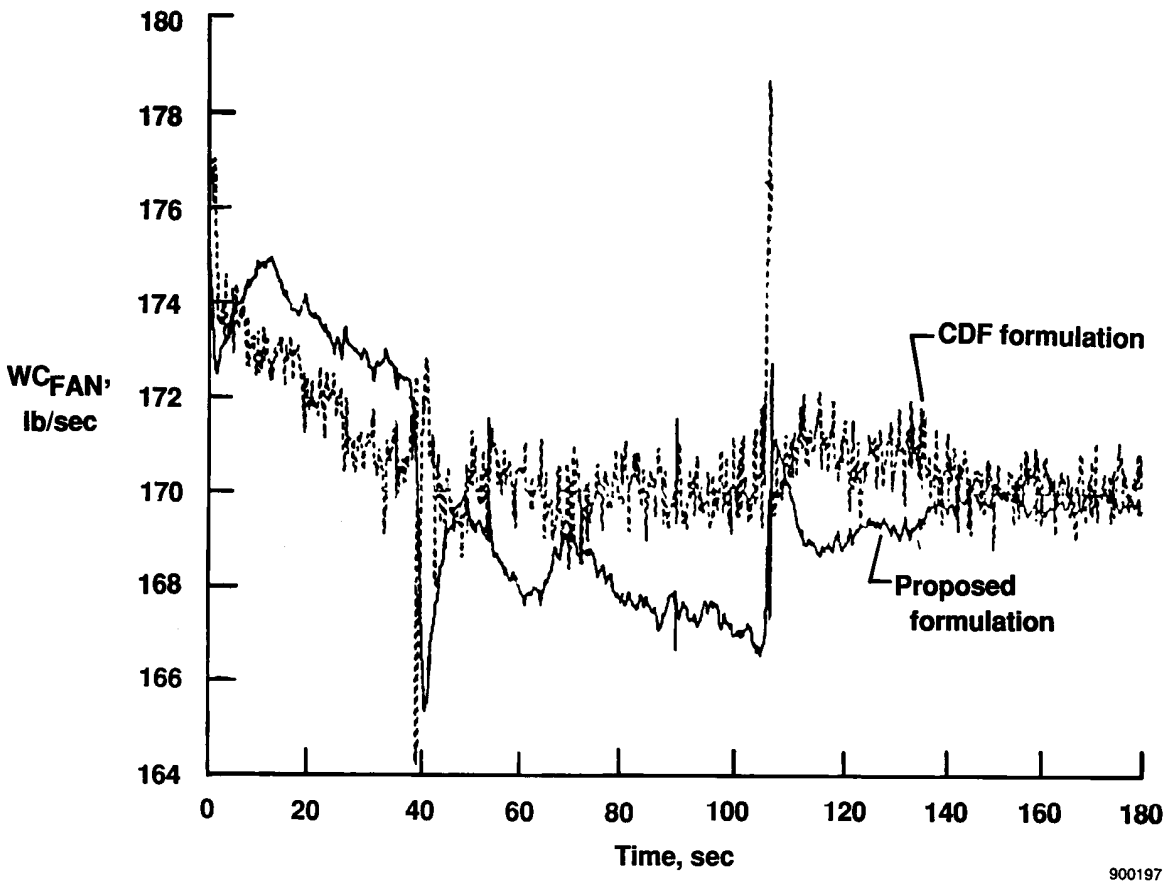

(b) Corrected fan airflow estimates.

Fig. 14 Concluded.

NASA
National Aeronautics and Space Administration

Report Documentation Page

1. Report No.	2. Government Accession No.	3. Recipient's Catalog No.
NASA TM-4234		

4. Title and Subtitle	5. Report Date
A Proposed Kalman Filter Algorithm for Estimation of Unmeasured Output Variables for an F100 Turbofan Engine	October 1990
	6. Performing Organization Code
7. Author(s)	8. Performing Organization Report No.
Gurbux S. Alag and Glenn B. Gilyard	H-1639
	10. Work Unit No.
	RTOP 533-02-21
9. Performing Organization Name and Address	11. Contract or Grant No.
NASA Ames Research Center Dryden Flight Research Facility P.O. Box 273, Edwards, CA 93523-0273	
	13. Type of Report and Period Covered
12. Sponsoring Agency Name and Address	Technical Memorandum
National Aeronautics and Space Administration Washington, DC 20546-0001	14. Sponsoring Agency Code

15. Supplementary Notes

Gurbux S. Alag: PRC System Service, Edwards, California.
Glenn B. Gilyard: Ames Research Center, Dryden Flight Research Facility, Edwards, California.

Prepared as AIAA 90-1920 for presentation at AIAA/SAE/ASME/ASEE Joint Propulsion Conference, Orlando, Florida, July 16–18, 1990.

16. Abstract

To develop advanced control systems for optimizing aircraft engine performance, unmeasurable output variables must be estimated. The estimation has to be done in an uncertain environment and be adaptable to varying degrees of modeling errors and other variations in engine behavior over its operational life cycle. This paper presents an approach to estimate unmeasured output variables by explicitly modeling the effects of off-nominal engine behavior as biases on the measurable output variables. A state variable model accommodating off-nominal behavior is developed for the engine, and Kalman filter concepts are used to estimate the required variables. Results are presented from nonlinear engine simulation studies as well as the application of the estimation algorithm on actual flight data. The formulation presented has a wide range of application since it is not restricted or tailored to the particular application described in the paper.

17. Key Words (Suggested by Author(s))	18. Distribution Statement
Aircraft engine performance, Off-nominal engine performance, Kalman filter, Bias estimation, Unmeasurable output estimation	Unclassified-Unlimited Subject category - 07

19. Security Classif. (of this report)	20. Security Classif. (of this page)	21. No. of Pages	22. Price
Unclassified	Unclassified	32	A03

NASA FORM 1626 OCT 86

For sale by the National Technical Information Service, Springfield, Virginia 22161

NASA-Langley, 1990