NASA Technical Memorandum 101719

An Automated Calibration Laboratory for Flight Research Instrumentation: Requirements and a Proposed Design Approach

Nora O'Neill-Rood and Richard D. Glover

May 1990

National Aeronautics and
Space Administration

NASA Technical Memorandum 101719

An Automated Calibration Laboratory for Flight Research Instrumentation: Requirements and a Proposed Design Approach

Nora O'Neill-Rood and Richard D. Glover
Ames Research Center, Dryden Flight Research Facility, Edwards, California

1990

National Aeronautics and
Space Administration
Ames Research Center
Dryden Flight Research Facility
Edwards, California 93523-0273

AN AUTOMATED CALIBRATION LABORATORY FOR FLIGHT RESEARCH INSTRUMENTATION: REQUIREMENTS AND A PROPOSED DESIGN APPROACH

Nora O'Neill-Rood and Richard D. Glover
NASA Ames Research Center
Dryden Flight Research Facility
P.O. Box 273
Edwards, California 93523-5000

ABSTRACT

The National Aeronautics and Space Administration Ames Research Center Dryden Flight Research Facility (Ames-Dryden) at Edwards, CA, operates a diverse fleet of research aircraft which are heavily instrumented to provide both real-time data for in-flight monitoring and recorded data for postflight analysis. Ames-Dryden's existing automated calibration (AUTOCAL) laboratory is a computerized facility which tests aircraft sensors to certify accuracy for anticipated harsh flight environments. Recently, a major AUTOCAL lab upgrade was initiated; the goal of this modernization is to enhance productivity and improve configuration management for both software and test data. The new system will have multiple testing stations employing distributed processing linked by a local area network to a centralized database. This paper describes the baseline requirements for the new AUTOCAL lab and a proposed design approach for its mechanization.

INTRODUCTION

The National Aeronautics and Space Administration (NASA) Ames Research Center Dryden Flight Research Facility (Ames-Dryden) has for many years used automation techniques to calibrate flight test instrumentation and hangar test equipment to support the missions of its research aircraft. Initial automation of the calibration laboratory began nearly 20 years ago using a Hewlett-Packard (HP) minicomputer. FORTRAN modules were written to automate the calibration of pressure sensors, including control of the pressure calibration units and temperature chambers, collection and analysis of sensor output voltages, storage of the resultant data, and plotting of the calibration curves. Since the installation of the initial HP hardware, gradual transitions were made to Digital Equipment Corporation (DEC) systems which were subsequently maintained through hardware and system software upgrades.

In the fall of 1988, NASA management decided to upgrade the automated calibration (AUTOCAL) laboratory in order to improve system productivity and reliability. A working group composed of AUTOCAL operations personnel and system design personnel was organized to assess the upgrade options for the lab. This paper reports on the working group's assessment of current lab operations, the requirements identified for an upgraded lab, and a design approach proposed to NASA management.

BACKGROUND

The pressure lab is one of four laboratories which perform calibrations at Ames-Dryden. The other three labs are the inertial lab, the acoustics lab, and the temperature lab. The pressure lab calibrates aircraft pressure sensors and hangar pressure test equipment. The inertial lab performs calibration of rate gyros, linear accelerometers, and angular accelerometers. The acoustics lab does near and far field microphone calibrations and vibration testing of accelerometers. The temperature lab, which is currently under development, will perform calibration of temperature sensors.

Both the pressure lab and the inertial lab use automated calibration (AUTOCAL) techniques in testing operations. The acoustics lab and the temperature lab are not included in the current AUTOCAL system, nor are there plans to include these labs in the initial configuration of the upgraded AUTOCAL. Therefore they will not be detailed in this report.

CURRENT AUTOMATED CALIBRATION OPERATIONS

Testing in the pressure lab is controlled using computer files called test information files (TIFs). The TIFs are calibration setup files containing test equipment settings required for a particular calibration run, such as pressures to be tested, temperatures to be attained in the chamber, temperature soak time, and transducer information, including scale factor, zero offset, and required accuracy tolerance. Menu-driven software provides the interface between the technician and the automated calibration test controlled by the TIF. The duration of a test run varies from 20 minutes to 2 days, depending on the number of data points and temperature range specified. Some tests involve intermediate checks to verify

agreement with an earlier calibration run. The resulting test data are stored as files on 8-in. floppy diskettes. After a calibration run is complete, test results are analyzed using several data output modes: ASCII terminals, line printer listings, and hardcopy color graphics plots. Final acceptance of a calibration run is the responsibility of an in-house quality assurance group who base their decisions on the printer listings and hardcopy plots. Filing cabinets are used to archive printer listings and graphics plots.

Figure 1 is a photograph of the pressure calibration laboratory work station. Control of pressure instrument calibration tests, as well as listing and plotting of test results, are commanded from this station.

Figure 2 shows the pressure calibration test equipment including a precision mercury manometer and a test equipment rack housing three pressure calibration units. All of the pressure test equipment, with the exception of the manometer, is automatically commanded over the IEEE-488 bus.

Operations in the inertial lab involve three major items of equipment: a centrifuge, a rate table, and a rotating head. The 42-in. radius centrifuge, shown in Figure 3, generates accelerations up to 100 g with a rating of 5000-lb force. The centrifuge offers two pressure–vacuum lines which may be optionally connected to the article under test. While not presently implemented, the centrifuge may be commanded automatically over a data bus. The rate table offers steady state, sinusoidal, and ramp rotary motions up to a 1000 deg/sec maximum. Figure 4 is a photograph of the rate table used in the inertial testing area. The table is covered by a temperature-controlled environmental chamber which may be used during calibrations. The rotating head test fixture permits testing of accelerometers in the 0–1 g range. As shown in Figure 5, the fixture has an extension arm which allows the test article to be tested inside a small oven.

In general, inertial sensors are initially passed through acceptance testing across a range of temperatures. Thereafter, they are typically recalibrated at a single temperature point. During a calibration run, sensors are checked at 21 points covering the range of interest in both directions to check for hysteresis. All data is recorded manually (on paper) and then keyed into a DEC MINC-11 system so that the curves can be plotted on a graphics plotter.

UPGRADE REQUIREMENTS

Though the existing automated calibration laboratory has served the Ames-Dryden engineering commmunity well, recurring operational problems and system limitations call for a system upgrade. The existing computer hardware is aged and therefore unreliable and expensive to maintain. There is no on-line data storage, requiring manual management of cumbersome quantities of floppy diskettes and hardcopy files of data listings and plots. Also, there is no provision made for graphic on-line monitoring of a calibration test in progress. As a result time is often wasted completing what will later be determined to be an unacceptable test. That is, only after a test is complete and a hardcopy plot is created is the technician able to determine that early on in the test, perhaps hour one of a two-day run, the data was unacceptable and the test should have been halted.

After holding two design meetings a week for four months, the AUTOCAL working group developed the following list of AUTOCAL upgrade requirements. The list is organized into functional categories emphasizing improvements in productivity and reliability.

To improve technician productivity:

- eliminate manual data recording,
- minimize technician keyboard operations,
- minimize need for hard copy file system,
- include test procedures, operations documentation, and help files on-line,
- accommodate calibration run resume capability, following an interruption caused by equipment failure, power failure, or the end of a shift, and
- equip all operating positions with color graphics terminals.

To improve system productivity:

- provide closed-loop control of calibration runs including automatic data acquisition and data file creation,
- include calibration set-up files (TIFs) on-line,
- provide IEEE-488 bus interface on all test equipment to allow for closed-loop control,
- network test areas to share control and input-output (I/O) devices,
- operate test areas independently of each other in multiuser environment,
- furnish a local on-line archive for interim data storage until calibration information management system (CIMS) upload, and
- make provisions for CIMS uploads through Ethernet (IEEE-802.3).

To improve system reliability:

- backup all files automatically, in near real-time mode,
- provide dual-redundant data archives, and

- maintain a spares pool containing full complement of spare components to provide the capability of restoring hardware to service in 60 minutes or less.

When fully implemented, calibration data generated by the AUTOCAL system will be uploaded to the CIMS, this connection is shown in Figure 6. The CIMS, currently under development, will be an in-house database of all information related to measurement instruments used by Ames-Dryden flight research projects. The CIMS system will perform collection, filing, and subsequent analysis and presentation of this calibration data. The primary purpose of the CIMS is to unify all calibration-related information into a single system. Currently, users must access numerous systems (some automated, on-line, and some manual, hardcopy) in scattered locations throughout the Ames-Dryden facility. Access to the CIMS database will be available to the engineering user community through a number of strategically located CIMS-dedicated terminals and through a multiuser, dial-in interface.

OVERVIEW

Figure 6 shows the proposed architecture of the AUTOCAL. The central system is a commercially available 80386-based MULTIBUS II (IEEE-1296) microprocessor system. The following features will be added to the manufacturer's baseline system: a second Ethernet board and software, auxiliary I/O, chassis and power supplies, a red, green, blue (RGB) color monitor (640 × 480), and a PC/AT-style keyboard and PC mouse. The 80386-based SCSI auxiliary I/O subsystem will support the following additional peripherals: 4 96-Mbyte hard drives, 2 3.5-in. floppy disk drives, and 1 5.25-in. floppy disk drive. This central system hardware configuration is shown in Figure 7.

Figure 8 illustrates the hardware set for a calibration station. The systems are commercially available 80386-based PC/AT-Bus microprocessor systems. To the manufacturer's baseline system the following features will be added: an SBX motherboard, an SBX IEEE-488 module, an SBX parallel I/O module, and an SBX RS-232C serial I/O module. Color graphics capabilities will be supported by an RGB color monitor (640 × 480), a PC/AT-style keyboard, and PC mouse. This graphics interface provides multiple overlapping independent windows, ASCII terminal emulation, and network virtual terminal. The Ethernet interface between the central system and the calibration stations will be accomplished with a PC-bus networking interface board in each calibration station chassis. The board is 80186 microprocessor based, with a local area network (LAN) coprocessor. A software development toolkit will be included on-line at each system to allow development and testing of applications at each calibration station.

UPGRADED LAB OPERATIONS

Figure 9 shows how the upgraded AUTOCAL would function. At the start of a run the technician will download a TIF from the central system's on-line database of TIFs. This file will include all the settings required for the calibration station to command closed-loop control of the calibration test specified. Test equipment settings, data acquisition, and data file creation will all be performed automatically, once the required calibration setup file (TIF) is selected. At the end of the calibration run the resulting calibration test data will be sent to the central system to archive, and eventually uploaded to the CIMS database. These CIMS uploads will be through the Ethernet interface available at the central system. Since color graphics displays are provided at all operating positions, hard copy plots will no longer be necessary in order to examine the test data in graphic form. Should a hard copy plot or test data listing be required, a color plotter and line printer will be available at the central system.

Figures 10 and 11 illustrate the pressure and inertial lab interfaces, respectively. As shown in the figures, the calibration stations will control a majority of the test equipment over the IEEE-488 bus. Process control will be distributed to the stations, while management of the TIF and data file databases will be concentrated at the central system. A LAN will link the stations to the central system.

DEVELOPMENT PLAN

The initial configuration for the upgraded AUTOCAL lab calls for one central system tied to three calibration stations. As mentioned above, two calibration stations will be located in the pressure laboratory and the third station will be located in the inertial laboratory. All four of the systems will be purchased turn-key. Competitive procurement is scheduled to begin fiscal year 1990. Verification and validation testing of the hardware will be completed within three months of receipt in order to identify and report any discrepancies to the manufacturer before the end of the three-month hardware warranty period.

Before any applications software is written, a software requirements document will be composed. Where feasible, existing FORTRAN application modules will be ported to the new iRMX-based system. Minor differences between the DEC and the iRMX compiler are expected, however it is anticipated that requirements for source code editing will be minimal. The remaining required software will then be designed and coded in a high-level language to be determined later.

Technician training will bridge the gap between existing lab operational procedures and those required for the new system. The technicians will probably participate in the three-month hardware verification process, since their involve-

ment will also serve as a training investment. Also, an on-line interactive help facility will serve as a training device; in this way the technicians will be learning about the system while actually using it. Formal systems training will be provided both by in-house personnel and off-site vendor training courses.

The AUTOCAL operations will conform to software guidelines developed by a NASA-wide calibration and metrology working group and to software management requirements detailed in NASA's basic operations manual.

Configuration management procedures will be implemented to control changes to the AUTOCAL hardware and software beyond those specified in the requirements documents. Configuration management is an in-house administrative organization which works with projects to document changes to the project's baseline system. The AUTOCAL development team is committed to implementing configuration management procedures to track the status of system hardware and software. Using the configuration management service has numerous advantages for the project, including making changes visible, and forcing the project team to consider the impact of the changes as well as requiring thorough documentation, thereby eliminating dependence on any one individual. Configuration management will provide an orderly approach to change with specific procedures for making change decisions, communicating these changes, and verifying that the changes are implemented correctly.

The calibration facility provides a vital service in support of Ames-Dryden's research engineering flight projects. Therefore, the facility must remain operational during the transition to the upgraded system. The existing hardware and software will not be decommissioned until the upgraded equipment is capable of performing the existing system's functions.

CONCLUDING REMARKS

Ames-Dryden's existing automated calibration laboratory (AUTOCAL) has successfully proved the concept of automated calibration of flight instrumentation. This success has prompted Ames-Dryden management to invest in upgrading hardware and software in order to maintain AUTOCAL's current capabilities. Additionally, the upgraded AUTOCAL laboratory will include numerous enhancements designed to further improve the productivity and reliability of the calibration laboratory.

NOMENCLATURE

ASCII	American Standard Code for Information Interchange
AUTOCAL	automated calibration laboratory
CIMS	calibration information management system
CPU	central processing unit
DEC	Digital Equipment Corporation
HP	Hewlett-Packard
IEEE	Institute of Electrical and Electronic Engineers
iRMX	Intel's real-time multitasking executive, operating system software
I/O	input/output
LAN	local area network
PC/AT	IBM (International Business Machines) personal computer/advanced technology
RGB	red, green, blue color monitor
SBX	single board expansion
SCSI	small computer system interface
SDLC	synchronous data link control
TIF	test information file

EC89 0264-005

Figure 1. Pressure calibration laboratory work station.

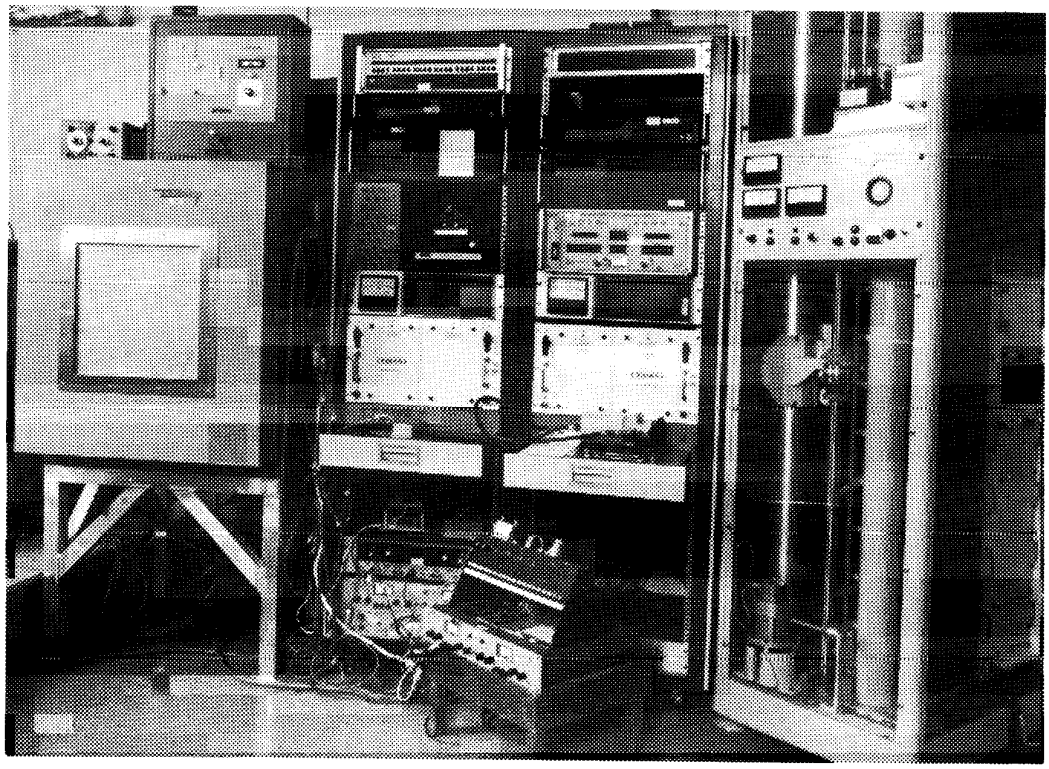

EC89 0264-007

Figure 2. Pressure calibration laboratory pressure controllers and associated test equipment.

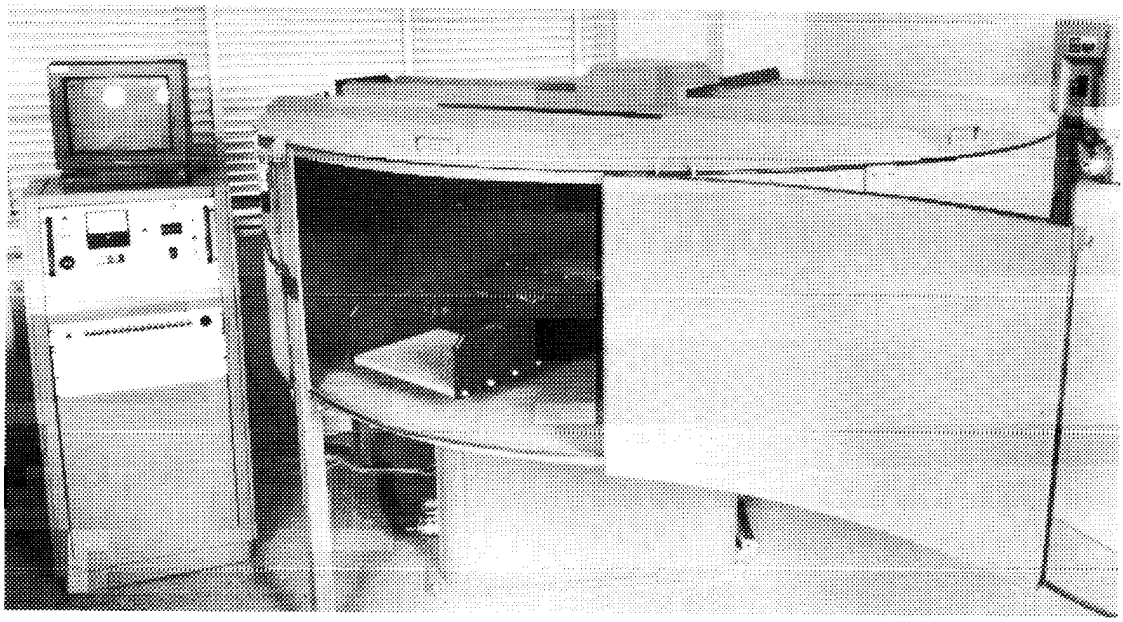

EC89 0264-003

Figure 3. Inertial calibration laboratory centrifuge.

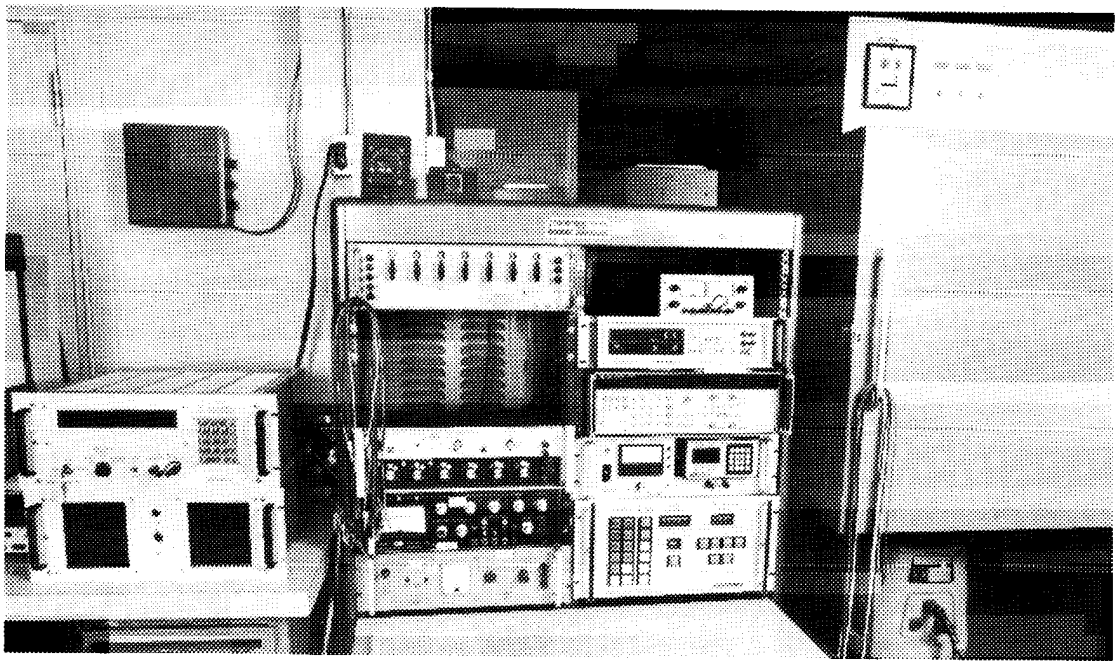

EC89 0264-001

Figure 4. Inertial calibration laboratory rate table and associated test equipment.

EC89 0264-002

Figure 5. Inertial calibration laboratory rotating head and associated test equipment.

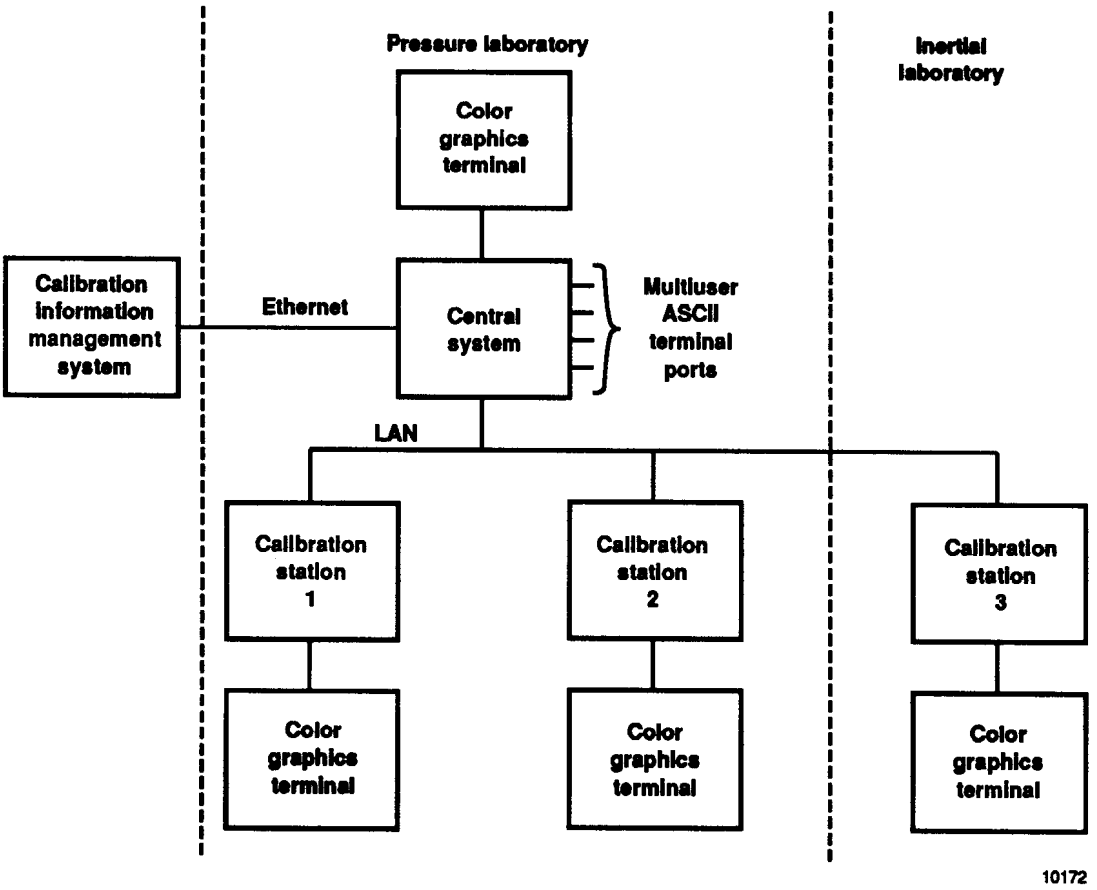

Figure 6. Automated calibration system overview.

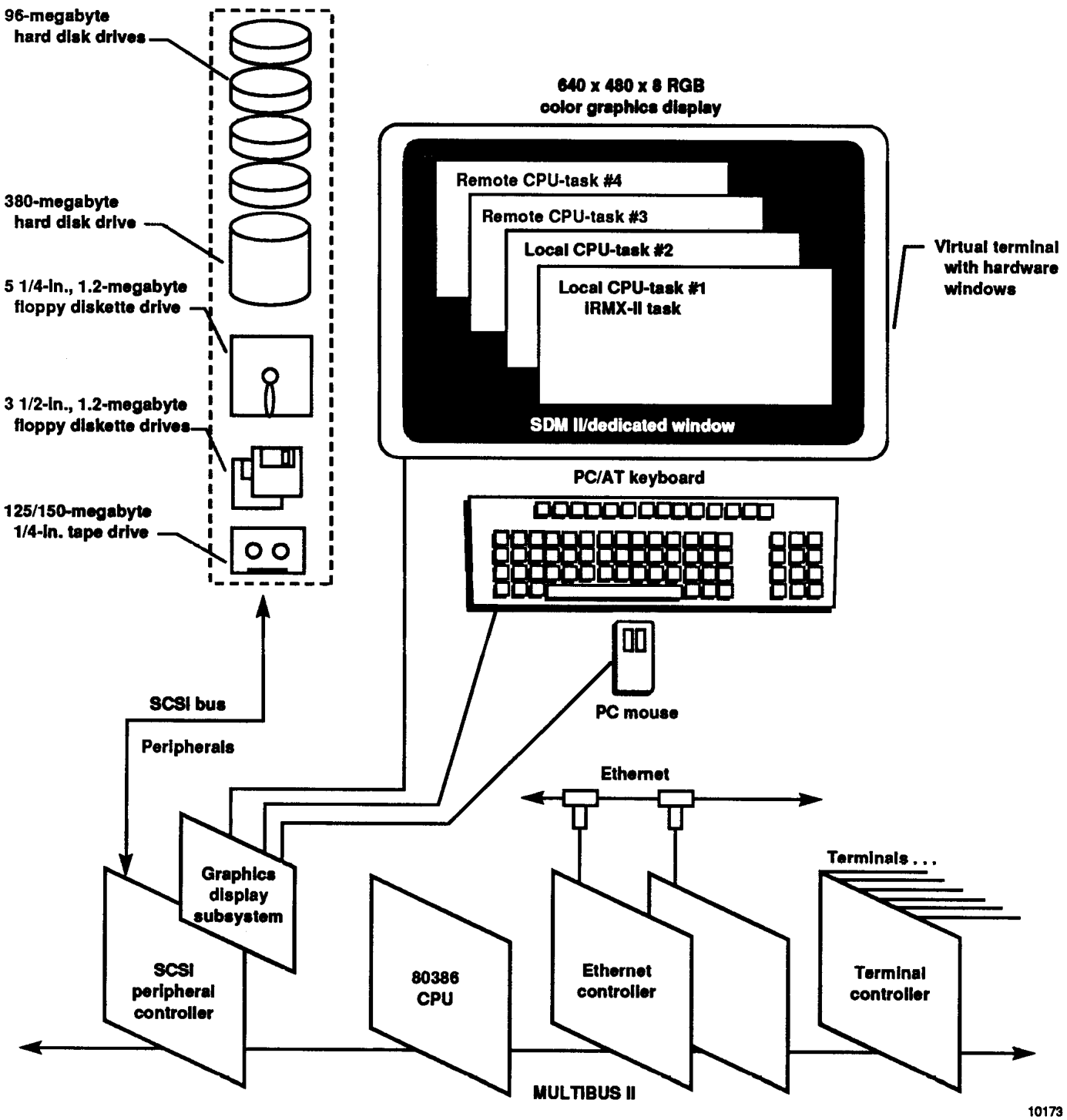

Figure 7. Central system.

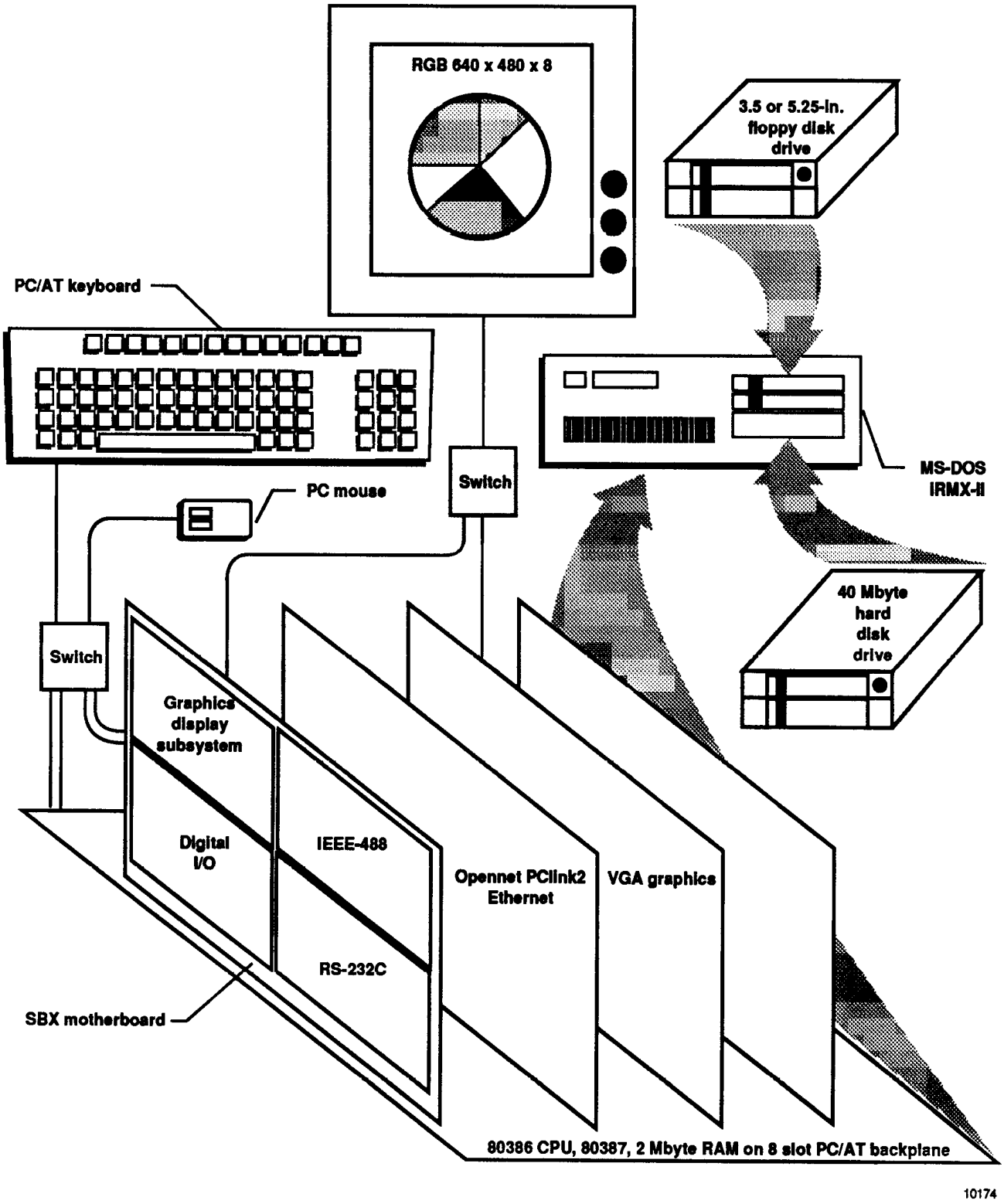

Figure 8. Calibration stations.

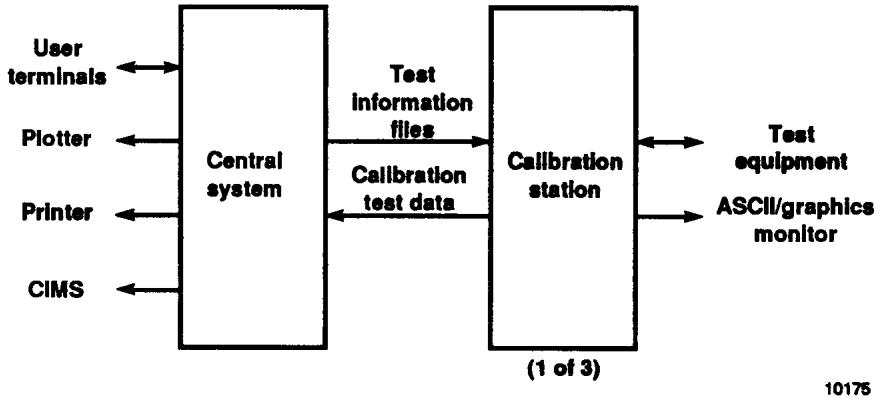

Figure 9. Automated calibration functional overview.

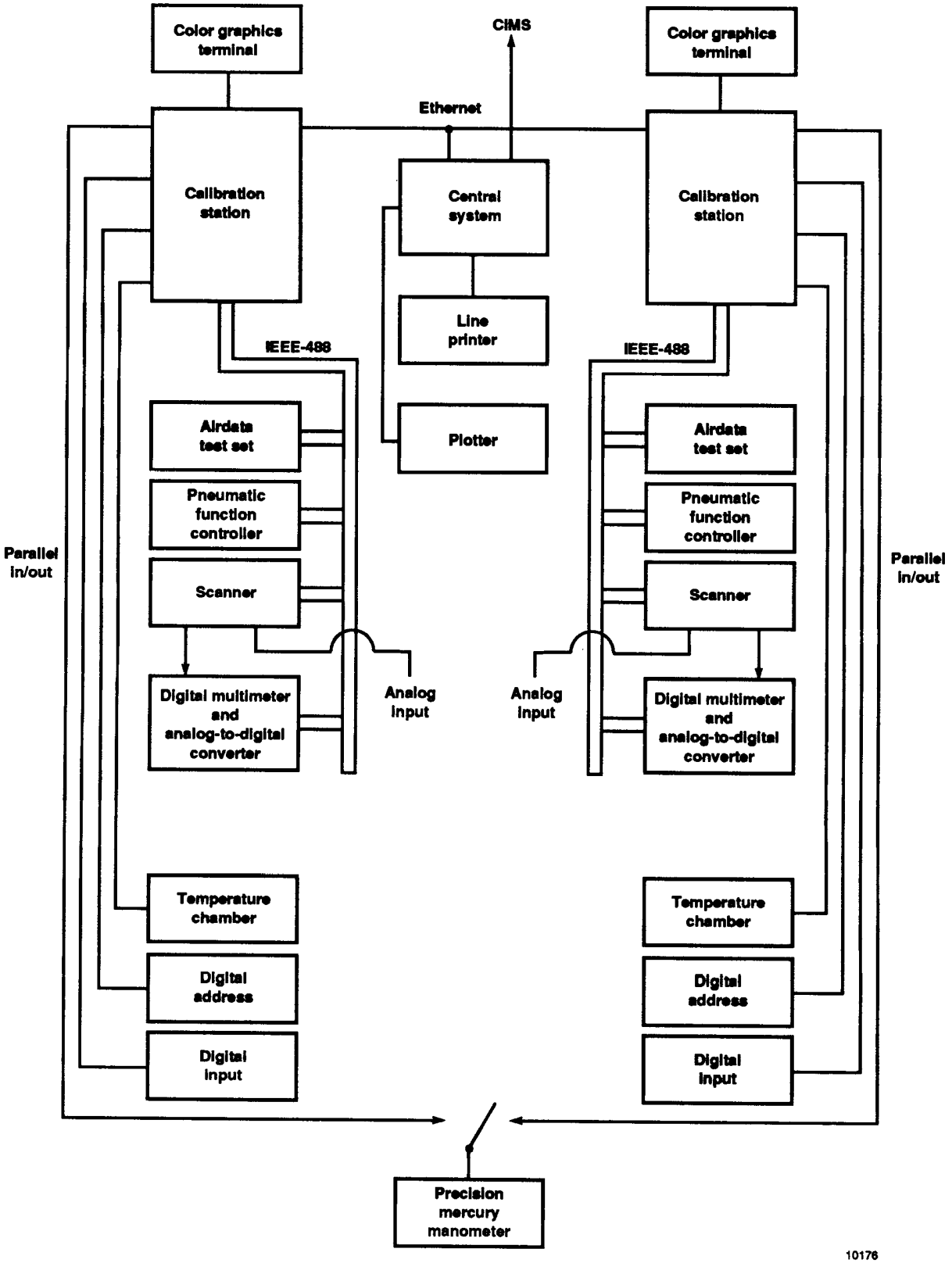

Figure 10. Pressure lab interfaces.

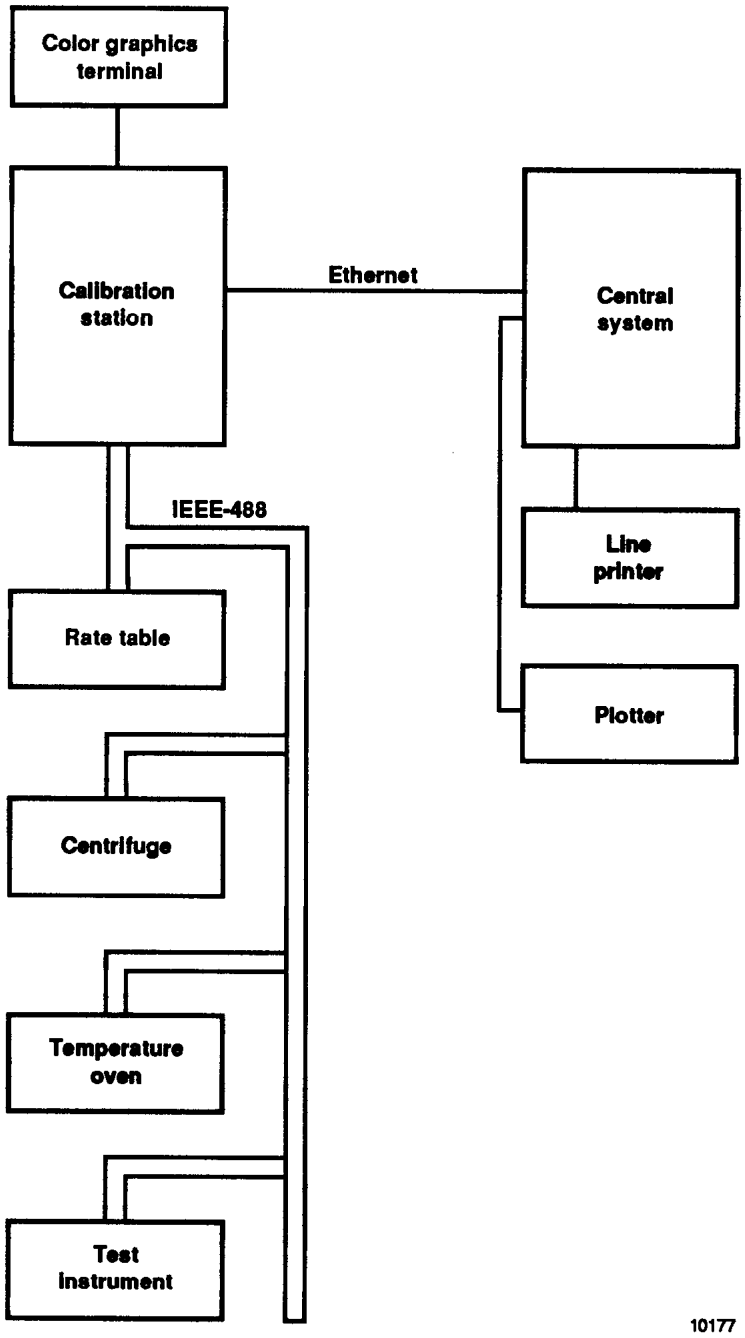

Figure 11. Inertial lab interfaces.

NASA
National Aeronautics and Space Administration

Report Documentation Page

1. Report No.	2. Government Accession No.	3. Recipient's Catalog No.
NASA TM-101719		

4. Title and Subtitle	5. Report Date
An Automated Calibration Laboratory for Flight Research Instrumentation: Requirements and a Proposed Design Approach	May 1990
	6. Performing Organization Code
7. Author(s)	8. Performing Organization Report No.
Nora O'Neill-Rood and Richard D. Glover	H-1594
	10. Work Unit No.
9. Performing Organization Name and Address	RTOP 533-02-01
NASA Ames Research Center Dryden Flight Research Facility P.O. Box 273, Edwards, CA 93523-0273	11. Contract or Grant No.
	13. Type of Report and Period Covered
12. Sponsoring Agency Name and Address	Technical Memorandum
National Aeronautics and Space Administration Washington, DC 20546	14. Sponsoring Agency Code

15. Supplementary Notes

Originally prepared for presentation at the 36th ISA International Instrumentation Symposium, May 7–10, 1990, at Denver, CO.

16. Abstract

The National Aeronautics and Space Administration Ames Research Center Dryden Flight Research Facility (Ames-Dryden) at Edwards, CA, operates a diverse fleet of research aircraft which are heavily instrumented to provide both real-time data for in-flight monitoring and recorded data for postflight analysis. Ames-Dryden's existing automated calibration (AUTOCAL) laboratory is a computerized facility which tests aircraft sensors to certify accuracy for anticipated harsh flight environments. Recently, a major AUTOCAL lab upgrade was initiated; the goal of this modernization is to enhance productivity and improve configuration management for both software and test data. The new system will have multiple testing stations employing distributed processing linked by a local area network to a centralized database. This paper describes the baseline requirements for the new AUTOCAL lab and the design approach being taken for its mechanization.

17. Key Words (Suggested by Author(s))	18. Distribution Statement
Calibration, Distributed processing, IEEE-488, iRMX, Multibus 2, PC/AT	Unclassified — Unlimited Subject category 62

19. Security Classif. (of this report)	20. Security Classif. (of this page)	21. No. of pages	22. Price
Unclassified	Unclassified	16	A02

NASA FORM 1626 OCT 86 **For sale by the National Technical Information Service, Springfield, VA 22161-2171.*