NASA Contractor Report 186019

An Aircraft Model for the AIAA Controls Design Challenge

Randal W. Brumbaugh

Contract NAS 2-12722
December 1991

National Aeronautics and
Space Administration

NASA Contractor Report 186019

An Aircraft Model for the AIAA Controls Design Challenge

Randal W. Brumbaugh
PRC Inc.,
Edwards, California

Prepared for
NASA Dryden Flight Research Facility
Edwards, California
Under Contract NAS 2-12722
1991

National Aeronautics and
Space Administration

Dryden Flight Research Facility
Edwards, California 93523-0273

An Aircraft Model for the AIAA Controls Design Challenge

Randal W. Brumbaugh*
PRC Inc.
Edwards, California

Abstract

This paper describes a generic, state-of-the-art, high-performance aircraft model, including detailed, full-envelope, nonlinear aerodynamics, and full-envelope thrust and first-order engine response data. While this model was primarily developed for the AIAA Controls Design Challenge, the availability of such a model provides a common focus for research in aeronautical control theory and methodology. This paper also describes an implementation of this model using the FORTRAN computer language, associated routines furnished with the aircraft model, and techniques for interfacing these routines to external procedures. Figures showing vehicle geometry, surfaces, and sign conventions are included.

Nomenclature

A	axial force, lb
a	speed of sound in air, ft/sec
a_n	normal acceleration, g
a_{nx}	x-body axis accelerometer output, accelerometer at center of gravity, g
a_{ny}	y-body axis accelerometer output, accelerometer at center of gravity, g
a_{nz}	z-body axis accelerometer output, accelerometer at center of gravity, g
a_x	acceleration along the x-body axis, g
a_y	acceleration along the y-body axis, g
a_z	acceleration along the z-body axis, g
b	wingspan, ft
C	force or moment coefficient
C_D	coefficient of drag
C_L	coefficient of lift
C_ℓ	coefficient of rolling moment
C_m	coefficient of pitching moment
C_n	coefficient of yawing moment
C_y	coefficient of sideforce
$\bar{c}$	mean aerodynamic chord, ft
D	drag force, lb
det	determinant of matrix
E_s	specific energy, ft
fpa	flightpath acceleration, g
G	actuator transfer function
g	acceleration due to gravity, ft/sec^2
h	altitude, ft
$\ddot{h}$	vertical acceleration, ft/sec^2
I	aircraft inertia tensor, slug-ft^2
I_e	rotational inertia of the engine, slug-ft^2
I_x	x-body axis moment of inertia, slug-ft^2
I_{xy}	x-y body axis product of inertia, slug-ft^2
I_{xz}	x-z body axis product of inertia, slug-ft^2
I_y	y-body axis moment of inertia, slug-ft^2
I_{yz}	y-z body axis product of inertia, slug-ft^2
I_z	z-body axis moment of inertia, slug-ft^2
K	aerodynamic constant
L	total body axis aerodynamic rolling moment, ft-lb; or total aerodynamic lift, lb
ℓ	generalized length, ft
M	Mach number; or total body axis aerodynamic pitching moment, ft-lb
m	aircraft total mass, slug
m_e	mass of engine
N	normal force, lb; or total body axis aerodynamic yawing moment, ft-lb
n	load factor
P_s	specific power, ft/sec

*Electrical engineer, member AIAA.

This paper is a work of the U.S. Government and is not subject to copyright protection in the United States.

p	roll rate, rad/sec; or pressure, lb/ft^2
p_a	ambient pressure, lb/ft^2
p_t	total pressure, lb/ft^2
q	pitch rate, rad/sec
$\bar{q}$	dynamic pressure, lb/ft^2
q_c	impact pressure, lb/ft^2
Re	Reynolds number
Re'	Reynolds number per unit length, ft^{-1}
r	yaw rate, rad/sec
S	wing planform area, ft^2
s	complex frequency
T	ambient temperature, K; or total angular momentum slug-ft^2/sec^2; or thrust, lb
T_t	total temperature, K
u	velocity in x-axis direction, ft/sec
V	total velocity, ft/sec
V_c	calibrated airspeed, kn
V_e	equivalent airspeed, kn
v	velocity in y-axis direction, ft/sec
W	vehicle weight, lb
w	velocity in z-axis direction, ft/sec
X	total force along the x-body axis, lb
X_T	thrust along the x-body axis, lb
Y	sideforce, lb
Y_T	thrust along the y-body axis, lb
Z	total force along the z-body axis, lb
Z_T	thrust along the z-body axis, lb
α	angle of attack, rad
β	angle of sideslip, rad
γ	flightpath angle, rad
Δr	displacement of aerodynamic reference point from center of gravity
Δx	displacement from center of gravity along x-body axis, ft
Δy	displacement from center of gravity along y-body axis, ft
Δz	displacement from center of gravity along z-body axis, ft
δ_A	differential aileron command
δ_D	differential stabilator command
δ_H	symmetric stabilator command
δ_R	directional command
δ_{jk}	Kronecker delta
θ	pitch angle, rad
μ	coefficient of viscosity
ρ	density of air, slug/ft
ΣL	total body axis rolling moment, ft-lb
ΣM	total body axis pitching moment, ft-lb
ΣN	total body axis yawing moment, ft-lb
ϕ	roll angle, rad
ϕ_L	tilt angle of acceleration normal to the flight-path from the vertical plane, rad
ψ	heading angle, rad
ω	total rotational velocity of the vehicle

Superscripts

$\cdot$	derivative with respect to time

Subscripts

A	aileron
ar	aerodynamic reference point
D	differential stabilator
D	total drag
E	engine
H	symmetric stabilator
h	altitude
$,i$	measurement not at aerodynamic reference
L	total lift
ℓ	rolling moment
M	Mach number
m	pitching moment
n	yawing moment
o	offset from center of gravity
p	roll rate
q	pitch rate
R	rudder
r	yaw rate
s	stability axis
x	along the x-body axis
Y	sideforce
y	along the y-body axis
z	along the z-body axis
0	standard day, sea level conditions

Introduction

Background and History

This paper describes the structure and implementation of a high-performance aircraft model. The model was developed for the AIAA Controls Design Challenge, but is intended to be useful for a variety of controls and guidance applications. Model definition and implementation are covered in separate sections.

The AIAA Controls Design Challenge provides an opportunity for participants to apply control system design methodologies to a realistic, nonlinear aircraft model. Any design which performs the control task is acceptable, but innovative or unusual approaches have been encouraged. The challenge is a two-year competition. Control designs are judged according to their ability to control the model during a level acceleration and 3-g turn maneuver at four specified flight conditions.

The model integrates several components. Existing pieces were used whenever possible and modified to facilitate integration. The result is that most of the model implementation is based directly on proven and reliable components, although the resulting model is not completely representative of any particular aircraft. Because of the mixed history of the model, some aspects may appear to resemble actual aircraft. The user is warned against making any assumptions based on these appearances.

Model Characteristics

The model is a collection of modules, each performing a specific function. The primary modules are the aircraft actuator and surface command inputs, aircraft mass and geometry modeling, the equations of motion, the atmospheric model, the aerodynamics, the propulsion system, and the observation variable modeling. Each major module is described in the following sections. Figure 1 shows how the modules would be connected together with user synthesized control laws to form a complete system model.

Aircraft Description

The aircraft modeled is a high-performance, supersonic vehicle representative of current-day fighters. It is powered by two afterburning turbofan engines, each capable of producing approximately 32,000 lb of thrust. A three-view of the aircraft is shown in Fig. 2, including control surfaces and locations.

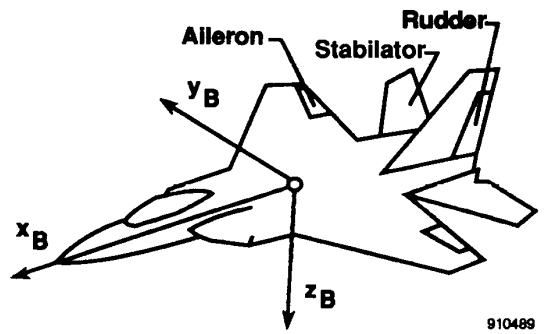

Fig. 2 Three view of aircraft and control surfaces.

The operational envelope for this vehicle, for trimmed, straight-and-level, 1-g flight is shown in Fig. 3 for the specified weight of 45,000 lb. The envelope includes a maximum Mach number (M) of 2.3 and an altitude limit in the 50,000- to 60,000-ft range. Mass and geometry parameters are given in Table 1.

The aircraft primary flight-control surfaces consist of horizontal stabilators which are capable of symmetric or differential movement, conventional ailerons, and a single

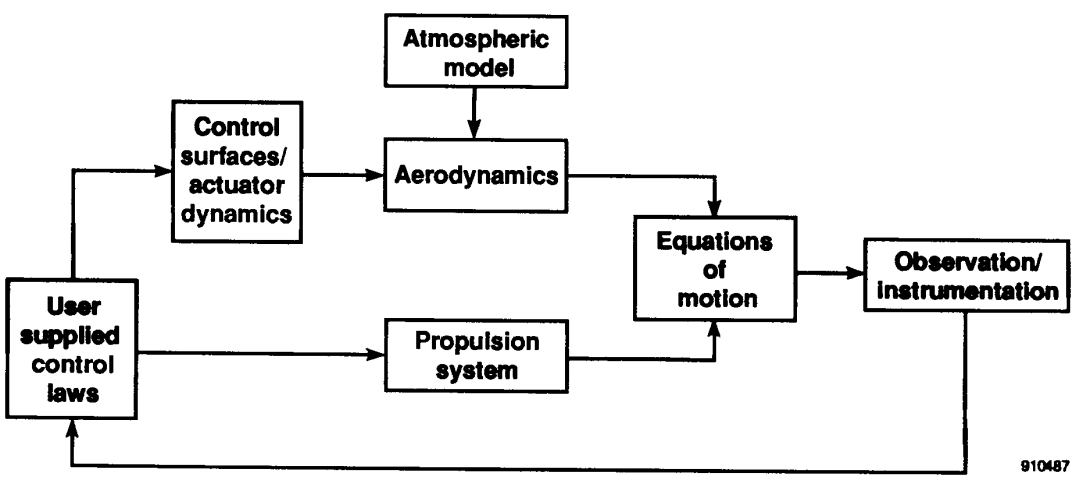

Fig. 1 Modular structure of the model.

Table 1. Mass and geometry characteristics.

Parameter	Symbol	Value
Wing area	S	608.0 ft^2
Wing span	b	42.8 ft
Mean aerodynamic chord	$\bar{c}$	15.95 ft
Vehicle weight	W	45,000.0 lb
Moments of inertia		
(Roll)	I_x	28,700.0 slug/ft^2
(Pitch)	I_y	165,100.0 slug/ft^2
(Yaw)	I_z	187,900.0 slug/ft^2
Products	I_{xz}	−520.0 slug/ft^2
	I_{xy}	0.0 slug/ft^2
	I_{yz}	0.0 slug/ft^2

vertical rudder. The individual surface position limits, rate limits, and sign conventions for positive deflection are detailed in Table 2. The equations in Table 3 define the individual surface deflections in terms of command inputs. There are a total of five actuators; two aileron, two stabilator, and one rudder. The model includes identical actuators for all surfaces. These actuators are rate limited at 24 deg/sec and have a first-order response modeled by

$$G(s) = \frac{20}{s + 20}$$

A block diagram of the actuator model is shown in Fig. 4. The command inputs to the aileron and stabilator surfaces are differential and symmetric commands, which are separated into inputs to each of the surface actuator models. The resulting surface positions are then recombined to obtain the command response. This is shown for the stabilators in Fig. 5. Because of the nonlinearities in the stabilator command path, the commands will interact in ways which are not easily predicted. This interaction is shown in Figs. 6 and 7.

Aerodynamic Model

The aerodynamics are modeled for the full vehicle envelope using multidimensional tables and linear interpolation to form nonlinear function generators. In general, these aerodynamic quantities are functions of M and some combination of angle of attack (α), angle of sideslip (β), and symmetric stabilator deflection.

Table 3. Surface deflection definition equations.

Surface	Deflection definition	Rate limit deg/sec
$\delta_{A_{left}}$	$\delta_A \div 2$	24
$\delta_{A_{right}}$	$-\delta_A \div 2$	24
$\delta_{H_{left}}$	$(2\,\delta_H - \delta_D) \div 2$	24
$\delta_{H_{right}}$	$(2\,\delta_H + \delta_D) \div 2$	24
δ_R	δ_R	24

The equations defining the aerodynamic model provide nondimensional force and moment coefficients. The longitudinal parameters are in the stability axis system; the lateral–directional parameters are given with respect to the body axis system.

The equations used for this model are given in the following

$$C_{L_{STAB}} = C_{L_{BASIC}} + \Delta C_{L_{n_z}} n_z$$

$$C_{m_{STAB}} = C_{m_{BASIC}} + \Delta C_{m_{n_z}} n_z + \frac{\bar{c}}{(2V)}(C_{m_q} q + C_{m_{\dot{\alpha}}} \dot{\alpha} + C_{L_{BASIC}} \Delta N_0)$$

$$C_{D_{STAB}} = C_D + \Delta C_{D_{alt}} + \Delta C_{D_{mach}}$$

$$C_{y_{BODY}} = C_{y_{BASIC}} + C_{y_{\delta_A}} \delta_A + C_{y_{\delta_D}} \delta_D - \Delta C_{y_{\delta_R}} K_{\delta_{R_y}}$$

$$C_{\ell_{BODY}} = C_{\ell_{BASIC}} + C_{\ell_{\delta_A}} \delta_A + C_{\ell_{\delta_D}} \delta_D - \Delta C_{\ell_{\delta_R}} K_{\delta_{R_\ell}} + \frac{b}{(2V)}(C_{\ell_p} p + C_{\ell_r} r)$$

$$C_{n_{BODY}} = C_{n_{BASIC}} + C_{n_{\delta_A}} \delta_A + C_{n_{\delta_D}} \delta_D + \Delta C_{n_{\delta_R}} K_{\delta_{R_n}} + \frac{b}{(2V)}(C_{n_p} p + C_{n_r} r)$$

The terms in the equations containing C, ΔC, ΔN, or K are outputs from the function generation routines, and are either calculated by linear interpolation of tabular data or by direct calculation. The source of the functional coefficients is shown in Table 4.

Propulsion System Model

The propulsion system model consists of two distinct engine models. The engines are similar, but not identical; the thrust produced for identical throttle settings is not

Table 2. Command input limits and sign conventions.

Command name	Symbol	Limits, deg	Positive sign convention
Aileron	δ_A	±20	Left trailing edge down
Symmetric stabilator	δ_H	+15/−25	Trailing edge down
Differential stabilator	δ_D	±20	Left trailing edge down
Rudder	δ_R	±30	Trailing edge left

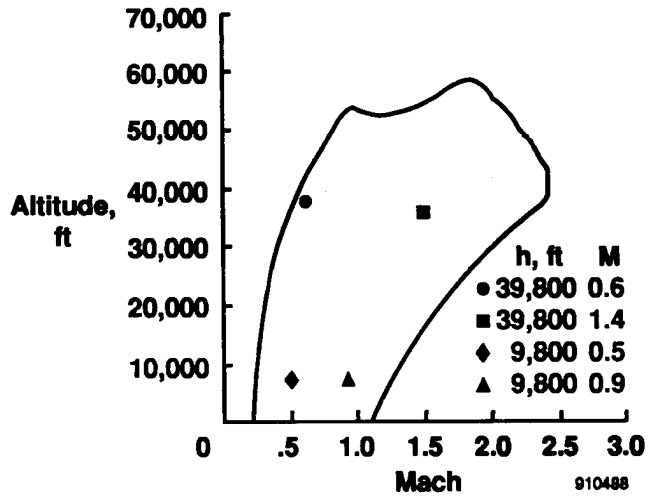

Fig. 3 Vehicle operational envelope at 45,000 lb.

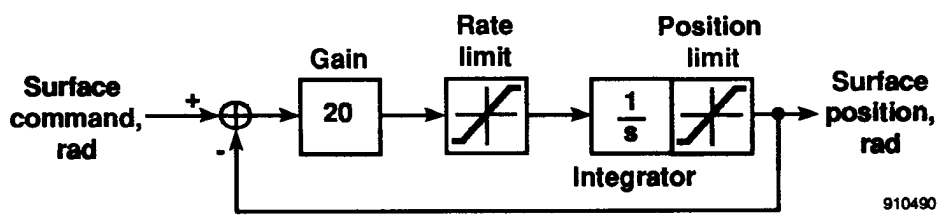

Fig. 4 Block diagram of actuator model.

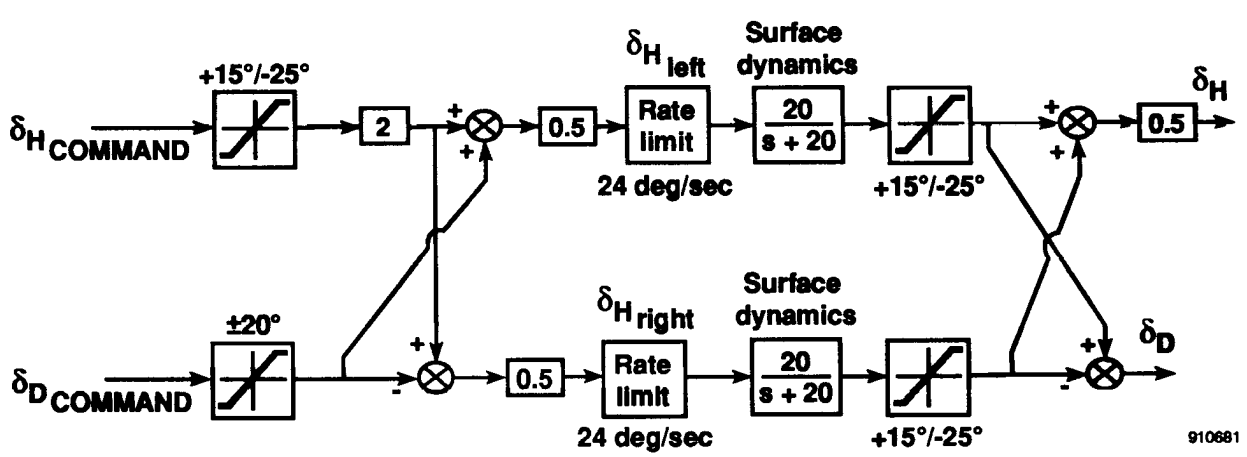

Fig. 5 Stabilator command path.

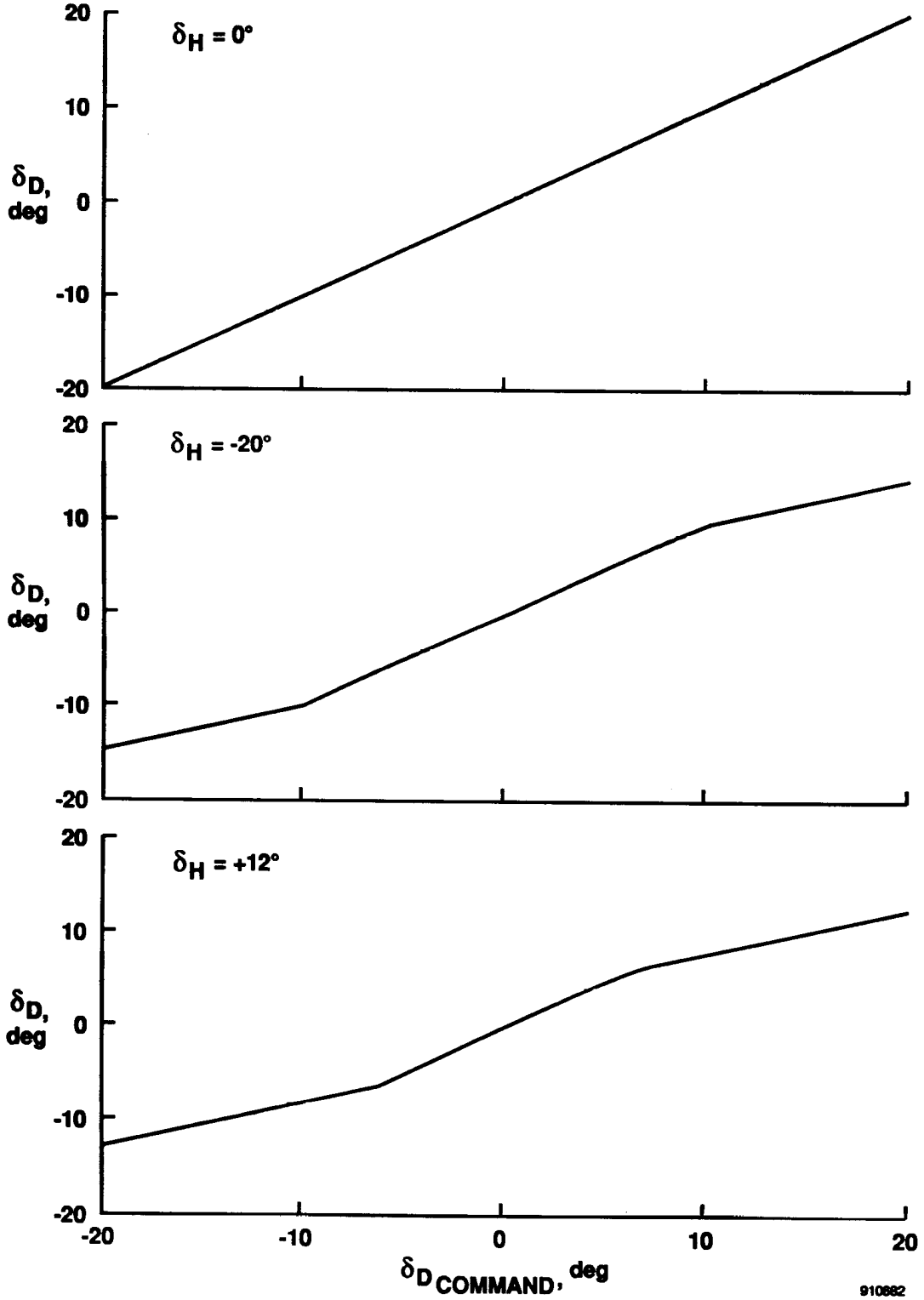

Fig. 6 Effect of δ_H on δ_D response.

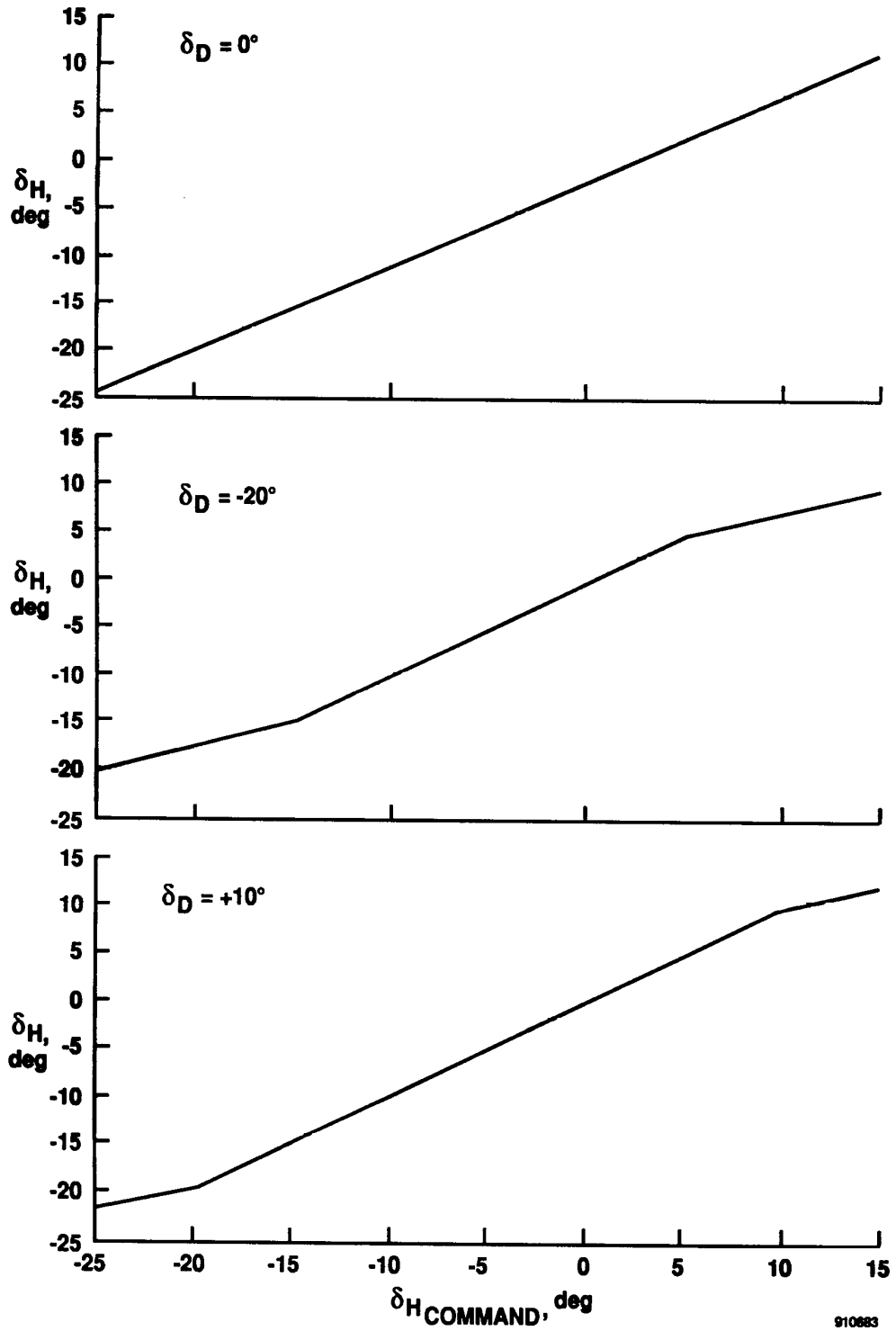

Fig. 7 Effect of δ_D on δ_H response.

Table 4. Source of aerodynamic coefficients.

Coefficient	Source	Independent variables
$C_{L_{BASIC}}$	Table	M, α, δ_H
$\Delta C_{L_{u_s}}$	Table	M
$C_{m_{BASIC}}$	Table	M, α, δ_H
$\Delta C_{m_{u_s}}$	Table	M
C_{m_q}	Table	M, α
$C_{m_{\dot{\alpha}}}$	Table	M, α
ΔN_0	Table	M
$C_D(\alpha < 32)$	Table	$C_{L_{BASIC}}, M$
$(32 < \alpha < 40)$	Table	$C_{L_{BASIC}}, M, \alpha$
$(\alpha > 40)$	Calc	$C_{L_{BASIC}}, \alpha$
$\Delta C_{D_{alt}}$	Calc	h
$\Delta C_{D_{nozzle}}$	Table	M, throttle
$C_{\ell_{BASIC}}$	Table	M, α, β
$\Delta C_{\ell_{\delta_R}}$	Table	M, α, δ_R
$K_{\delta_{R\ell}}$	Table	M
C_{ℓ_p}	Table	M, α
C_{ℓ_r}	Table	M, α
$C_{n_{BASIC}}$	Table	M, α, β
$C_{n_{\delta_A}}$	Table	M, α
$C_{n_{\delta_D}}$	Table	M, α
$\Delta C_{n_{\delta_R}}$	Table	M, α, β
$K_{\delta_{Rn}}$	Table	M, α
C_{n_p}	Table	M, α
C_{n_r}	Table	M, α
$C_{y_{BASIC}}$	Table	M, α, β
$C_{y_{\delta_A}}$	Table	M, α
$C_{y_{\delta_D}}$	Table	M, α
$\Delta C_{y_{\delta_R}}$	Table	M, α, δ_R
$K_{\delta_{Ry}}$	Table	M

symmetrical. Each engine thrust vector is aligned with the body axis, and acts at a point located 10 ft behind the vehicle center of gravity and 4 ft laterally from the centerline. The thrust produced by each engine is a function of altitude (h), M, and throttle setting. Each engine is modeled as a nonlinear system having two separate sections; a core engine and an afterburner (augmentor) section with associated sequencing logic.

Throttle position inputs to the engine model are in degrees, with a minimum position of 20° and a maximum of 127°. The core section responds to throttle inputs up to 83°. The afterburner section begins to respond at a throttle position of 91°. The core model has first-order dynamics and rate limiting to model spool-up effects. A block diagram of the core model dynamics is shown in Fig. 8. The afterburner has a rate limiter and sequencing logic to model the fuel pump and pressure regulator effects. A block diagram of the afterburner model dynamics is shown in Fig. 9.

Observation Model

The observation variables provided by this model represent a broad class of parameters useful for vehicle analysis and control design problems. These variables include the state, time derivatives of state, and control variables. Air-data parameters, accelerations, flightpath terms, and other miscellaneous parameters are also included. The equations used to calculate those parameters are derived from a number of sources (Clancy, 1975; Dommasch et al., 1967; Etkin, 1972; Gainer and Hoffman, 1972; Gracy, 1980). Implicit in many of these observation equations is an atmospheric model. The atmospheric model is derived from the U.S. Standard Atmosphere (1962).

Three body axis angular rates and three translational accelerations are available as observation variables. These include the x-body axis rate (u), the y-body axis rate (v), and the z-body axis rate (w). The time derivatives of these quantities, $\dot{u}$, $\dot{v}$, and $\dot{w}$ are also included. The equations defining these quantities are

$$u = V \cos\alpha \cos\beta$$

$$v = V \sin\beta$$

$$w = V \sin\alpha \cos\beta$$

$$\dot{u} = \left(\frac{X_T - gm\sin\theta - D\cos\alpha + L\sin\alpha}{m}\right) + rv - qw$$

$$\dot{v} = \left(\frac{Y_T + gm\cos\theta\sin\phi + Y}{m}\right) + pw - ru$$

$$\dot{w} = \left(\frac{Z_T + gm\cos\theta\cos\phi - D\sin\alpha - L\cos\alpha}{m}\right) + qu - pv$$

The vehicle body axis accelerations constitute the set of observation variables that, except for state variables themselves, are most commonly used in aircraft control analysis and design problems. These accelerations are measured in g units and are derived directly from the body axis forces defined in the previous section for translational acceleration. The equations used for the body axis acceleration a_x, a_y, and a_z are

$$a_x = (X_T - D\cos\alpha + L\sin\alpha - gm\sin\theta)/g_0 m$$

$$a_y = (Y_T + Y + gm\cos\theta\sin\phi)/g_0 m$$

$$a_z = (Z_T - D\sin\alpha - L\cos\alpha + gm\cos\theta\cos\phi)/g_0 m$$

where subscript 0 denotes standard day, sea level conditions. The equations for the outputs of the body axis accelerometers (denoted by subscript n) that are at vehicle center

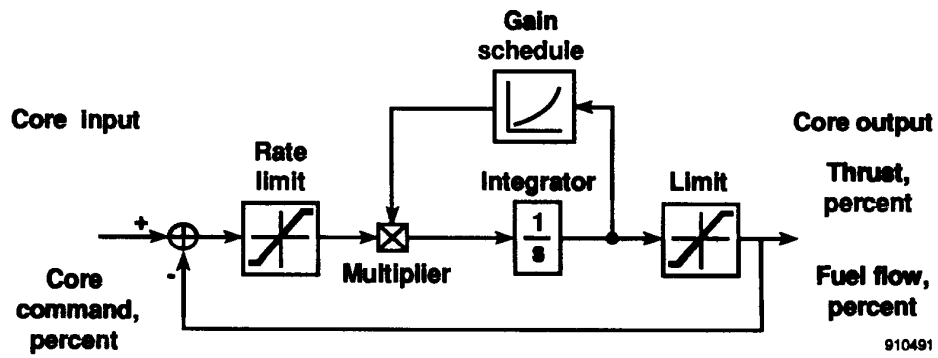

Fig. 8 First order engine core dynamics.

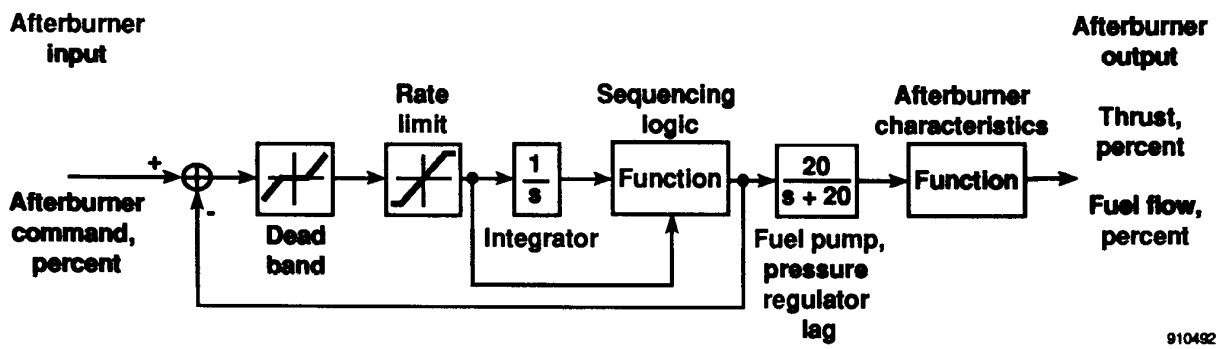

Fig. 9 Engine afterburner model dynamics.

of gravity are

$$a_{nx} = (X_T - D\cos\alpha + L\sin\alpha)/g_0 m$$

$$a_{ny} = (Y_T + Y)/g_0 m$$

$$a_{nz} = (Z_T - D\sin\alpha - L\cos\alpha)/g_0 m$$

$$a_n = -a_{nz}$$

For orthogonal accelerometers that are aligned with the vehicle body axes but are not at vehicle center of gravity (denoted by subscript ,i), the following equations apply

$$a_{nx,i} = a_{nx} - \left[(q^2 + r^2)x_x - (pq - \dot{r})y_x - (pr + \dot{q})z_x\right]/g_0$$

$$a_{ny,i} = a_{ny} + \left[(pq + \dot{r})x_y - (p^2 + r^2)y_y + (qr - \dot{p})z_y\right]/g_0$$

$$a_{nz,i} = a_{nz} + \left[(pr - \dot{q})x_z + (qr + \dot{p})y_z - (q^2 + p^2)z_z\right]/g_0$$

$$a_{n,i} = -a_{nz,i}$$

where the subscripts x, y, and z refer to the x-, y-, and z-body axes, respectively, and the symbols x, y, and z refer to the x-, y-, and z-body axis locations of the sensors relative to the vehicle center of gravity. Included in the set of acceleration equations is load factor, $n = L/W$, where L is the total aerodynamic lift and W is the vehicle weight. Included in the observation variables are the flightpath-related parameters, including flightpath angle (γ), flightpath acceleration (fpa), vertical acceleration ($\ddot{h}$), flightpath angle rate ($\dot{\gamma}$), and scaled altitude rate ($\dot{h}/57.3$). The equations used to determine these quantities are

$$\gamma = \sin^{-1}\left(\frac{\dot{h}}{v}\right)$$

$$\text{fpa} = \frac{\dot{v}}{g_0}$$

$$\ddot{h} = a_x \sin\theta - a_y \sin\phi\cos\theta - a_z \cos\phi\cos\theta$$

$$\dot{\gamma} = \frac{V\ddot{h} - \dot{h}\dot{V}}{V\sqrt{V^2 - \dot{h}^2}}$$

Two energy related terms are included in the observation variables; specific energy (E_s) and specific power (P_s), defined as

$$E_s = h + \frac{V^2}{2g}$$

$$P_s = \dot{h} + \frac{V\dot{V}}{g}$$

The set of observation variables available also includes four force parameters; total aerodynamic lift (L), total aerodynamic drag (D), total aerodynamic normal force (N), and total aerodynamic axial force (A). These quantities are defined as

$$L = \bar{q}SC_{L_{STAB}}$$

$$D = \bar{q}SC_{D_{STAB}}$$

$$N = L\cos\alpha + D\sin\alpha$$

$$A = -L\sin\alpha + D\cos\alpha$$

where $C_{D_{STAB}}$ and $C_{L_{STAB}}$ are coefficients of drag and lift, respectively.

The airdata parameters having the greatest application to aircraft dynamics and control problems are the sensed parameters and the reference and scaling parameters. The sensed parameters are impact pressure (q_c), ambient or free-stream pressure (p_a), total pressure (p_t), ambient or free-stream temperature (T), and total temperature (T_t). The selected reference and scaling parameters are Mach number (M), dynamic pressure ($\bar{q}$), speed of sound (a), Reynolds number (Re), Reynolds number per unit length (Re'), and the Mach meter calibration ratio (q_c/p_a). These quantities are defined as

$$a = \left(1.4\frac{p_0}{\rho_0 T_0}T\right)^{\frac{1}{2}}$$

$$M = \frac{V}{a}$$

$$Re = \frac{\rho V \ell}{\mu}$$

$$Re' = \frac{\rho V}{\mu}$$

$$\bar{q} = \frac{\rho V^2}{2}$$

$$q_c = \begin{cases} \left[(1.0 + 0.2M^2)^{3.5} - 1.0\right] p_a & (M \leq 1.0) \\ \left[1.2M^2\left(\frac{5.76M^2}{5.6M^2 - 0.8}\right)^{2.5} - 1.0\right] p_a & (M > 1.0) \end{cases}$$

$$p_t = p_a + q_c$$

$$T_t = T(1.0 + 0.2M^2)$$

where ℓ is length, p pressure, T is ambient of free-stream temperature, ρ the density of the air, and μ the coefficient of viscosity. Free-stream pressure, free-stream temperature, and the coefficient of viscosity are derived from the U.S. Standard Atmosphere (1962).

Included in the airdata calculations are two velocities; equivalent airspeed (V_e) and calibrated airspeed (V_c), both computed in knots. The calculations assume that internal units are in the English system. The equation used for equivalent airspeed is

$$V_e = 17.17\sqrt{\bar{q}}$$

which is derived from the definition of equivalent airspeed,

$$V_e = \sqrt{\frac{2\bar{q}}{\rho_0}}$$

where $\rho_0 = 0.002378$ slug/ft^3 and V_e is converted from feet per second to knots. Calibrated airspeed is derived from the following definition of impact pressure

$$q_c = \begin{cases} p_0\left[\left(1.0 + \frac{\rho_0}{7.0p_0}V_c^2\right)^{3.5} - 1\right] & (V_c \leq a_0) \\ 1.2\left(\frac{V_c}{a_0}\right)^2 p_0\left[\frac{5.76}{5.6 - 0.8(a_0/V_c)^2}\right]^{2.5} - p_0 & (V_c > a_0) \end{cases}$$

For the case where $V_c \leq a_0$, the equation for V_c is

$$V_c = 1479.116\sqrt{\left(\frac{q_c}{p_0} + 1.0\right)^{2/7} - 1.0}$$

Calibrated airspeed is found using an iterative process for the case where $V_c > a_0$

$$V_c = 582.95174\sqrt{\left(\frac{q_c}{p_o} + 1.0\right)\left[1.0 - \frac{1.0}{7.0(V_c/a_0)^2}\right]^{2.5}}$$

is executed until the change in V_c from one iteration to the next is less than 0.001 kn.

The final set of observation variables provided is a miscellaneous collection of other parameters of interest in analysis and design problems. The first group consists of measurements from sensors not located at the vehicle center of gravity. These represent angle of attack ($\alpha_{,i}$), angle of sideslip ($\beta_{,i}$), altitude ($h_{,i}$), and altitude rate ($\dot{h}_{,i}$) measurements displaced from the center of gravity by some x-, y-, and z-body axis distances. The equations used to compute these quantities are

$$\alpha_{,i} = \alpha - \left(\frac{qx - py}{V}\right)$$

$$\beta_{,i} = \beta + \left(\frac{rx - pz}{V}\right)$$

$$h_{,i} = h + x\sin\theta - y\sin\phi\cos\theta - z\cos\phi\cos\theta$$

$$\dot{h}_{,i} = \dot{h} + \dot{\theta}(x\cos\theta + y\sin\phi\sin\theta + z\cos\phi\sin\theta) - \dot{\phi}(y\cos\phi\cos\theta - z\sin\phi\cos\theta)$$

The remaining miscellaneous parameters are total angular momentum (T), stability axis roll rate (p_s), stability axis pitch rate (q_s), and stability axis yaw rate (r_s), defined as

$$T = \frac{1}{2}\left(I_x p^2 - 2I_{xy}pq - 2I_{xz}pr + I_y q^2 - 2I_{yz}qr + I_z r^2\right)$$

$$p_s = p\cos\alpha + r\sin\alpha$$

$$q_s = q$$

$$r_s = -p\sin\alpha + r\cos\alpha$$

Equations of Motion and Atmospheric Model

The nonlinear equations of motion used in this model are general six-degree-of-freedom equations representing the flight dynamics of a rigid aircraft flying in a stationary atmosphere over a flat, nonrotating Earth. These equations of motion were derived by Etkin, and the derivation is detailed in Duke, Antoniewicz, and Krambeer. The equations for each variable in the state vector are given in the following.

The following equations for rotational acceleration are used

$$\begin{aligned}\dot{p} = \big[&(\Sigma L)I_1 + (\Sigma M)I_2 + (\Sigma N)I_3 - p^2(I_{xz}I_2 - I_{xy}I_3)\\ &+ pq(I_{xz}I_1 - I_{yz}I_2 - D_z I_3)\\ &- pr(I_{xy}I_1 + D_y I_2 - I_{yz}I_3) + q^2(I_{yz}I_1 - I_{xy}I_3)\\ &- qr(D_x I_1 - I_{xy}I_2 + I_{xz}I_3)\\ &- r^2(I_{yz}I_1 - I_{xz}I_2)\big]/det\ I\end{aligned}$$

$$\begin{aligned}\dot{q} = \big[&(\Sigma L)I_2 + (\Sigma M)I_4 + (\Sigma N)I_5 - p^2(I_{xz}I_4 - I_{xy}I_5)\\ &+ pq(I_{xz}I_2 - I_{yz}I_4 - D_z I_5)\\ &- pr(I_{xy}I_2 + D_y I_4 - I_{yz}I_5) + q^2(I_{yz}I_2 - I_{xy}I_5)\\ &- qr(D_x I_2 - I_{xy}I_4 + I_{xz}I_5)\\ &- r^2(I_{yz}I_2 - I_{xz}I_4)\big]/det\ I\end{aligned}$$

$$\begin{aligned}\dot{r} = \big[&(\Sigma L)I_3 + (\Sigma M)I_5 + (\Sigma N)I_6 - p^2(I_{xz}I_5 - I_{xy}I_6)\\ &+ pq(I_{xz}I_3 - I_{yz}I_5 - D_z I_6)\\ &- pr(I_{xy}I_3 + D_y I_5 - I_{yz}I_6) + q^2(I_{yz}I_3 - I_{xy}I_6)\\ &- qr(D_x I_3 - I_{xy}I_5 + I_{xz}I_6)\\ &- r^2(I_{yz}I_3 - I_{xz}I_5)\big]/det\ I\end{aligned}$$

Where ΣL, ΣM and ΣN are the aerodynamic total moments about the x-, y-, and z-body axes, respectively, including power plant induced moments, and

$$det\ I = I_x I_y I_z - 2I_{xy}I_{xz}I_{yz} - I_x I_{yz}^2 - I_y I_{xz}^2 - I_z I_{xy}^2$$

$$I_1 = I_y I_z - I_{yz}^2$$

$$I_2 = I_{xy}I_z + I_{yz}I_{xz}$$

$$I_3 = I_{xy}I_{yz} + I_y I_{xz}$$

$$I_4 = I_x I_z - I_{xz}^2$$

$$I_5 = I_x I_{yz} + I_{xy}I_{xz}$$

$$I_6 = I_x I_y - I_{xy}^2$$

$$D_x = I_z - I_y$$

$$D_y = I_x - I_z$$

$$D_z = I_y - I_x$$

The translational acceleration equations used are

$$\begin{aligned}\dot{V} = [&-D\cos\beta + Y\sin\beta + X_T\cos\alpha\cos\beta\\ &+ Y_T\sin\beta + Z_T\sin\alpha\cos\beta\\ &- mg(\sin\theta\cos\alpha\cos\beta - \cos\theta\sin\phi\sin\beta\\ &\quad - \cos\theta\cos\phi\sin\alpha\cos\beta)]/m\end{aligned}$$

$$\begin{aligned}\dot{\alpha} = [&-L + Z_T\cos\alpha - X_T\sin\alpha\\ &+ mg(\cos\theta\cos\phi\cos\alpha + \sin\theta\sin\alpha)]/Vm\cos\beta\\ &+ q - \tan\beta(p\cos\alpha + r\sin\alpha)\end{aligned}$$

$$\begin{aligned}\dot{\beta} = [&D\sin\beta + Y\cos\beta - X_T\cos\alpha\sin\beta\\ &+ Y_T\cos\beta - Z_T\sin\alpha\sin\beta\\ &+ mg(\sin\theta\cos\alpha\sin\beta + \cos\theta\sin\phi\cos\beta\\ &\quad - \cos\theta\cos\phi\sin\alpha\sin\beta)]/Vm\\ &+ p\sin\alpha - r\cos\alpha\end{aligned}$$

where α, β, θ, and ϕ are angles of attack, sideslip, pitch, and roll, respectively; X_T, Y_T, and Z_T are thrust along the x-, y-, and z-body axes; and D is drag force, g gravitational acceleration, L total aerodynamic lift, m total aircraft mass, V total velocity, and Y sideforce.

The equations defining the vehicle attitude rates are

$$\dot{\theta} = q\cos\phi - r\sin\phi$$

$$\dot{\psi} = q\sin\phi\sec\theta + r\cos\phi\sec\theta$$

$$\dot{\phi} = p + q\sin\phi\tan\theta + r\cos\phi\tan\theta$$

where ψ is heading angle.

The equations defining the Earth-relative velocities are

$$\begin{aligned}\dot{h} = V(&\cos\beta\cos\alpha\sin\theta - \sin\beta\sin\phi\cos\theta\\ &- \cos\beta\sin\alpha\cos\phi\cos\theta)\end{aligned}$$

$$\begin{aligned}\dot{x} = V[&\cos\beta\cos\alpha\cos\theta\cos\psi\\ &+ \sin\beta(\sin\phi\sin\theta\cos\psi - \cos\phi\sin\psi)\\ &+ \cos\beta\sin\alpha(\cos\phi\sin\theta\cos\psi + \sin\phi\sin\psi)]\end{aligned}$$

$$\begin{aligned}\dot{y} = V[&\cos\beta\cos\alpha\cos\theta\sin\psi\\ &+ \sin\beta(\sin\phi\sin\theta\sin\psi + \cos\phi\cos\psi)\\ &+ \cos\beta\sin\alpha(\cos\phi\sin\theta\sin\psi - \sin\phi\cos\psi)]\end{aligned}$$

The atmospheric data model is based on tables from the U.S. Standard Atmosphere (1962). This model calculates values for speed of sound, acceleration due to gravity, air density, viscosity, and ambient static pressure and temperature. These values are calculated based on altitude. The

tabular data is organized on evenly spaced breakpoints between 0 and 90 km. Linear interpolation is used between table values for altitudes in this range; the extreme values are used for altitudes outside the range.

FORTRAN Implementation

The model is implemented as a program in standard FORTRAN 77 programming language. The program is intended to be portable, and has been successfully compiled on a wide range of computer platforms. The routines which implement the models are designed in a modular fashion, patterned after the modules described in the previous section. Modules communicate through named common blocks.

There are four primary subroutines; each corresponds to a primary module in the model. These routines are CCALC, ENGINE, INSTRM, and UCNTRL. The CCALC routine performs the calculations for the aerodynamic model. The UCNTRL routine, supplied by the user, calculates desired control surface deflections for the aerodynamic modeling routines. The INSTRM routine calculates the instrumentation models for the observation variables. The ENGINE routine contains the propulsion system model. These subroutines and associated common blocks are described in detail in the following subsections.

Aircraft Characteristics

Vehicle mass and geometry information is read from the file **params.dat**. These values are stored in the common block DATAIN as follows

```
COMMON /DATAIN/ S   , B   , CBAR, AMSS,
                AIX , AIY , AIZ , AIXZ ,
                AIXY, AIYZ, AIXE
```

The first three variables in the common block, S, B, and CBAR, represent wing area, wingspan, and mean aerodynamic chord, respectively. The vehicle mass is represented by AMSS. The remaining values are vehicle inertias.

Equations of Motion and Atmospheric Model Routines

The routine DERIVC calculates the equations of motion, based on the previously listed model equations. The routine INTG integrates the equations to calculate the new state vector. The integration is performed using a second-order Runge-Kutta midpoint algorithm. Atmospheric model calculations are performed by the ALTFN routine.

Aerodynamic Model Routines

The aerodynamic model contains two major subroutines, ADATIN and CCALC. The subroutine ADATIN is used during initialization to input the basic formatted aerodynamic data from the file **HPAS.dat**. The subroutine CCALC uses this aerodynamic data, the state variables, and the surface positions to determine the aerodynamic coefficients. The CCALC subroutine is executed whenever new aerodynamic coefficients are required (for example, once each frame during a simulation).

The aerodynamic data are communicated from ADATIN to CCALC through named common blocks that occur in only these two routines. The interface between CCALC and the main program consists of several named common blocks that are used to pass state variables, airdata parameters, surface positions, and force and moment coefficients between CCALC and the calling program.

The main transfer of data into the subroutine CCALC is through named common blocks. These common blocks contain the state variables, airdata parameters, and surface positions. The transfer of output data from CCALC is through a named common block containing the aerodynamic force and moment coefficients. The details of these common blocks follow.

The common block DRVOUT contains the state variables and their derivatives with respect to time. The structure of this common block is shown in Table 5. The state variables

Table 5. Names and locations of state variables and derivatives in DERIVC common block.

Index	F	DF	Description
1	T	TDOT	time
2	P	PDOT	p
3	Q	QDOT	q
4	R	RDOT	r
5	V	VDOT	velocity
6	ALP	ALPDOT	α
7	BTA	BTADOT	β
8	THA	THADOT	θ
9	PSI	PSIDOT	ψ
10	PHI	PHIDOT	ϕ
11	H	HDOT	h
12	X	XDOT	x position
13	Y	YDOT	y position

are stored first, in the F array, and the derivatives follow in the DF array. Each array contains 13 elements. Routines which require access to these arrays use an EQUIVALENCE statement to allow access to the variables by the names shown in Table 5, for clarity. For example, the body axis rates p, q, and r appear as P, Q, and R, respectively. Total velocity is represented by the variable V, and altitude by H.

```
COMMON /DERIVC/ F(13), DF(13)
```

The common block SIMOUT contains the main airdata parameters required for the function generation subroutine. The variables in this common block are

```
COMMON /SIMOUT/ AMCH, QBAR, GMA, DEL,
                UB ,  VB ,  WB ,
                VEAS, VCAS
```

Mach number and dynamic pressure are the first entries in the common block, symbolized by AMCH and QBAR, respectively. The body axis velocities u, v, and w are included as UB, VB, and WB, respectively.

Inputs to the actuator models are entered through the variables in the CONCOM common block, the structure of which is shown in the following

COMMON /CONCOM/ DAC, DHC, DRC, DDC

The actuator model routine, ACTDYN, calculates the appropriate inputs to the aerodynamic model, based on the command inputs, and stores them in the CONTRL common block. The CONTRL common block contains the surface position and engine thrust information in the DC array. The structure of the common block /CONTRL/ is as follows

COMMON /CONTRL/ DC (30)

There are six locations in the DC array used. The definition of these is shown in Table 6. Routines which access these parameters usually EQUIVALENCE them to the variable names shown in the table.

Table 6. Names and locations of command inputs.

Array index	Command variable	Position variable	Function
1	DAC	DA	δ_A
5	DHC	DH	δ_H
8	DDC	DD	δ_D
9	DRC	DR	δ_R
11	---		left engine thrust
12	---		right engine thrust

The common block SIMACC contains the accelerations, accelerometer outputs, and normal accelerometer output at the center of gravity of the aircraft.

```
COMMON /SIMACC/ AX  , AY  , AZ  ,
                ANX, ANY, ANZ,
                AN
```

The output common block CLCOUT contains the variables representing the aerodynamic moment and force coefficients

COMMON /CLCOUT/ CL, CM, CN, CD, CLFT, CY

The variables CL, CM, and CN are the symbols for the coefficients of rolling moment (C_ℓ), pitching moment (C_m), and yawing moment (C_n), respectively; these terms are body axis coefficients. The stability axis forces are represented by CD (coefficient of drag C_D), CLFT (coefficient of lift C_L), and CY (sideforce coefficient C_Y).

Propulsion System Model Routines

The top level subroutine ENGINE computes individual engine parameters to calculate force, torque, and gyroscopic effects caused by engine offset from the centerline. Each time ENGINE is called, it calls the interface routine UENGIN, which calls the actual engine model in the routine ENGMDL. After ENGMDL computes thrust from each engine, ENGINE uses the parameters in the ENGSTF common to compute force, torque, and gyroscopic effects. The control inputs to the engine model are THRSTX(1) for the left engine throttle position in degrees, and THRSTX(2) for the right engine. The THRSTX array is in the CTPARM common block. The output thrust is available in two locations; left engine thrust appears as DC(11), in the CONTRL common block, and as THRUST(1) in the ENGSTF common block. Similarly, right engine thrust appears as DC(12) and THRUST(2). Various other parameters used for calculation of engine effects are passed through common block ENGSTF as follows

COMMON /ENGSTF/ THRUST (4), TLOCAT (4,3), XYANGL (4), XZANGL (4), TVANXY (4), TVANXZ (4), DXTHRS (4), EIX (4), AMSENG (4), ENGOMG (4)

The variables in this common block correspond to thrust (THRUST); the x-, y-, and z-body axis coordinates of the point at which thrust acts (TLOCAT); the orientation of the thrust vector in the x-y body axis plane (XYANGL) in degrees; the orientation of the thrust vector in the x-z body axis plane (XZANGL) in degrees; the orientation of the thrust vector in the x-y engine axis plane (TVANXY) in degrees; the orientation of the thrust vector in the x-z engine axis plane (TVANXZ) in degrees; the distance between the center-of-gravity of the engine and the thrust point (DXTHRS) measured positive in the negative x-engine axis; the rotational inertia of the engine (EIX); mass (AMSENG); and the rotational velocity of the engine (ENGOMG).

Although many of the engine arrays are sized to contain four elements, only the first two are used. The first element corresponds to the left engine, the second to the right engine. Engine data is contained in the file **ENGINE.dat**, stored as formatted text.

Observation Model Routines

The common block OBSERV allows the user to access all the observation variables. This common block contains the two vectors OBSVEC(120) and PARAM(120,6). A list of the available observations and parameters is given in Table 7.

Table 7. Observation variables available in the OBSVEC array.

Location (index) in OBSVEC	Variables
	State variables
1	Roll rate
2	Pitch rate
3	Yaw rate
4	Velocity
5	Angle of attack
6	Angle of sideslip
7	Pitch attitude
8	Heading
9	Roll attitude
10	Altitude
11	Displacement north
12	Displacement east
	Derivatives of state variables
13	Roll acceleration
14	Pitch acceleration
15	Yaw acceleration
16	Velocity rate
17	Angle-of-attack rate
18	Angle-of-sideslip rate
19	Pitch attitude rate
20	Heading rate
21	Roll attitude rate
22	Altitude rate
23	Velocity north
24	Velocity east
	Accelerations
25	x-body axis acceleration
26	y-body axis acceleration
27	z-body axis acceleration
28	x-body axis accelerometer at vehicle center of gravity
29	y-body axis accelerometer at vehicle center of gravity
30	z-body axis accelerometer at vehicle center of gravity
31	Normal acceleration
32	x-body axis accelerometer not at vehicle center of gravity
33	y-body axis accelerometer not at vehicle center of gravity
34	z-body axis accelerometer not at vehicle center of gravity
99	Normal accelerometer not at vehicle center of gravity
98	Load factor

Table 7. Continued.

Location (index) in OBSVEC	Variables
	Airdata parameters
91	Speed of sound
37	Reynolds number
103	Reynolds number per unit length
35	Mach number
36	Dynamic pressure
56	Impact pressure
55	Ambient pressure
57	Impact/ambient pressure ratio
58	Total pressure
59	Temperature
60	Total temperature
92	Equivalent airspeed
93	Calibrated airspeed
	Flightpath-related parameters
39	Flightpath angle
38	Flightpath acceleration
40	Flightpath angle rate
43	Scaled altitude rate
	Energy-related terms
46	Specific power
47	Specific energy
	Force parameters
94	Lift force
95	Drag force
96	Normal force
97	Axial force
	Body axis parameters
52	x-body axis velocity
53	y-body axis velocity
54	z-body axis velocity
100	Rate of change of velocity in x-body axis
101	Rate of change of velocity in y-body axis
102	Rate of change of velocity in z-body axis
	Miscellaneous measurements not at vehicle center of gravity
44	Angle of attack not at vehicle center of gravity
45	Angle of sideslip not at vehicle center of gravity
41	Altitude instrument not at vehicle center of gravity
42	Altitude rate instrument not at vehicle center of gravity

Table 7. Concluded.

Location (index) in OBSVEC	Variables
Other miscellaneous parameters	
48	Vehicle total angular momentum
49	Stability axis roll rate
50	Stability axis pitch rate
51	Stability axis yaw rate
Control surface parameters	
61 to 90	Control surfaces DC(1) to DC(30)
Propulsion parameters	
107	Throttle position - left engine
108	Throttle position - right engine

The observation vector is produced by the INSTRM routine, which contains calculations for instrumentation and observation models. The observation vector is in the OBSVEC array, in the OBSERV common block as follows

COMMON /OBSERV/ OBSVEC(120), PARAM(120,6)

The contents of the observation vector are strictly outputs from the simulation; none of the models use these values. The stored parameters were selected to provide a variety of useful information; however, several unused locations (OBSVEC(109) - OBSVEC(120)) are available for the user to include other observation variables. The user may also modify any of the locations without affecting the simulation. The PARAM array is used to store parameters which affect corresponding measurements in OBSVEC, such as the locations of an accelerometer not at the vehicle center of gravity.

Interfacing and Using the Model as a Simulation

This section describes the typical method of interfacing to and operating the simulation built from the FORTRAN implementation of the model. The information in this section is sufficient to allow a user to interface to the simulation and begin using it, without being concerned about the details of the model, equations, or the FORTRAN program.

The routine UCNTRL contains the user control law implementation. The inputs to this routine may be taken from any common block, but typically use the observation variables in the OBSVEC array, in the OBSERV common block. The OBSVEC array contains many parameters which would be unmeasurable on an actual aircraft; these should not be used as inputs to a practical control system. The outputs are the four control position commands in the CONCOM common block, and the two throttle settings, THRSTX, in the CTPARM common block. A simple autopilot is provided in the distribution UCNTRL as an example.

Routines for user supplied input and output are also provided. The routine URTIN is called at the start of each frame loop, to perform input. The routine URTOUT is called at the end of each loop to perform output tasks. These routines may perform any function the user wishes. They may contain file I/O, interfaces to a network, a windowing system, or shared memory. Using these routines, the user may implement displays or recording capability and control the simulation. These routines are called in the main loop, so their execution will affect execution time significantly. Examples of these routines are provided in the distribution.

A routine is provided for user specified initialization, UINIT. This routine is called once, as the last step in the initialization sequence. Any initializations may be included here.

The simulation has three mutually exclusive modes of operation; operate, reset, and hold. The mode selection is performed by setting one of the variables, OPERAT, RESET, or HOLD to true, and resetting the remaining two variables to false. These variables are found in the common block SSS001. Operate is the normal mode in which the simulation executes all the input, output, integration, and model routines. In hold mode, the simulation only executes the input and output routines; all states and parameters hold their last value. In reset mode, the simulation is reinitialized to the user specified initial conditions. The model routines are called, but no integrations are performed, so simulation time does not pass.

Initial conditions are specified in the array FIC, which contains a value for each of the 13 state variables. This array is in the common block SETICS. These values are copied into the state vector (F) by the ICSET routine whenever the simulation is placed into reset mode. Default initial conditions are provided in the block data initialization, but a new set may be used at any time by setting the desired values in the FIC array and putting the simulation into reset mode.

Concluding Remarks

This paper describes a generic, state-of-the-art, high-performance aircraft model, including detailed, full-envelope, nonlinear aerodynamics, and full-envelope thrust and first-order engine response data. While this model was primarily developed for the AIAA Controls Design Challenge, the availability of such a model provides a common focus for research in aeronautical control theory and methodology. This paper also describes an implementation of this model using the FORTRAN computer language, associated routines furnished with the aircraft model, and techniques for interfacing these routines to external procedures. Figures showing vehicle geometry, surfaces, and sign conventions are included.

References

Clancy, L.J., *Aerodynamics*, John Wiley & Sons, New York, NY, 1975.

Dommasch, Daniel O., Sherby, Sydney S., and Connolly, Thomas F., *Airplane Aerodynamics*, Fourth Edition, Pitman, New York, NY, 1967.

Duke, E.L., Antoniewicz, R.F., and Krambeer, K.D., *Derivation and Definition of a Linear Aircraft Model*, NASA RP-1207, Aug. 1988.

Duke E.L., Patterson, B.P., Antoniewicz, R.F., *User's Manual for LINEAR, a FORTRAN Program to Derive Linear Aircraft Models*, NASA TP-2768, Dec. 1987.

Etkin, Bernhard, *Dynamics of Atmospheric Flight*, John Wiley Sons, New York, 1972.

Gainer, Thomas G. and Hoffman, Sherwood, *Summary of Transformation Equations and Equations of Motion Used in Free-Flight and Wind-Tunnel Data Reduction and Analysis*, NASA SP-3070, 1972.

Gracey, William, *Measurement of Aircraft Speed and Altitude*, NASA RP-1046, 1980.

U.S. Standard Atmosphere, 1962, U.S. Government Printing Office, Washington 25, D.C., 1962.

REPORT DOCUMENTATION PAGE

Form Approved
OMB No. 0704-0188

Public reporting burden for this collection of information is estimated to average 1 hour per response, including the time for reviewing instructions, searching existing data sources, gathering and maintaining the data needed, and completing and reviewing the collection of information. Send comments regarding this burden estimate or any other aspect of this collection of information, including suggestions for reducing this burden, to Washington Headquarters Services, Directorate for Information Operations and Reports, 1215 Jefferson Davis Highway, Suite 1204, Arlington, VA 22202-4302, and to the Office of Management and Budget, Paperwork Reduction Project (0704-0188), Washington, DC 20503.

1. AGENCY USE ONLY *(Leave blank)*	2. REPORT DATE	3. REPORT TYPE AND DATES COVERED
	December 1991	NASA Contractor Report

4. TITLE AND SUBTITLE

An Aircraft Model for the AIAA Controls Design Challenge

5. FUNDING NUMBERS

RTOP 505-64-30

6. AUTHOR(S)

Randal W. Brumbaugh

7. PERFORMING ORGANIZATION NAME(S) AND ADDRESS(ES)

NASA Dryden Flight Research Facility
P.O. Box 273
Edwards, California 93523-0273

8. PERFORMING ORGANIZATION REPORT NUMBER

H-1777

9. SPONSORING/MONITORING AGENCY NAME(S) AND ADDRESS(ES)

National Aeronautics and Space Administration
Washington, DC 20546-0001

10. SPONSORING/MONITORING AGENCY REPORT NUMBER

NASA CR-186019

11. SUPPLEMENTARY NOTES

Prepared as AIAA 91-2631. Presented at the AIAA GNC Conference, New Orleans, Louisiana, August 12, 1991. Technical monitor: Vince Chacon

12a. DISTRIBUTION/AVAILABILITY STATEMENT

Unclassified — Unlimited
Subject Category 05

12b. DISTRIBUTION CODE

13. ABSTRACT *(Maximum 200 words)*

This paper describes a generic, state-of-the-art, high-performance aircraft model, including detailed, full-envelope, nonlinear aerodynamics, and full-envelope thrust and first-order engine response data. While this model was primarily developed for the AIAA Controls Design Challenge, the availability of such a model provides a common focus for research in aeronautical control theory and methodology. This paper also describes an implementation of this model using the FORTRAN computer language, associated routines furnished with the aircraft model, and techniques for interfacing these routines to external procedures. Figures showing vehicle geometry, surfaces, and sign conventions are included.

14. SUBJECT TERMS

Simulation; Controls; Design challenge; Model; Numerical simulation

15. NUMBER OF PAGES

19

16. PRICE CODE

A02

17. SECURITY CLASSIFICATION OF REPORT	18. SECURITY CLASSIFICATION OF THIS PAGE	19. SECURITY CLASSIFICATION OF ABSTRACT	20. LIMITATION OF ABSTRACT
Unclassified	Unclassified	Unclassified	Unlimited