NASA Technical Memorandum 101732

Thermal Behavior of a Titanium Honeycomb-Core Sandwich Panel

William L. Ko and Raymond H. Jackson

January 1991

NASA

National Aeronautics and
Space Administration

NASA Technical Memorandum 101732

Thermal Behavior of a Titanium Honeycomb-Core Sandwich Panel

William L. Ko and Raymond H. Jackson
Ames Research Center, Dryden Flight Research Facility, Edwards, California

1991

National Aeronautics and
Space Administration
Ames Research Center
Dryden Flight Research Facility
Edwards, California 93523-0273

ABSTRACT

Finite element thermal stress analysis was performed on a rectangular titanium honeycomb-core sandwich panel which is subjected to thermal load with a temperature gradient across its depth. The distributions of normal stresses in the face sheets and the face-sheet/sandwich-core interfacial shear stresses are presented. The thermal buckling of the heated face sheet was analyzed by assuming the face sheet to be resting on an elastic foundation representing the sandwich core. Thermal buckling curves and thermal buckling load surface are presented for setting the limit for temperature gradient across the panel depth.

INTRODUCTION

There are a variety of candidate hot-structural panel concepts for application to hypersonic aircraft such as the national aero-space plane and the high-speed civil transport. One of the promising candidates is a titanium honeycomb-core sandwich panel (both face sheets and the sandwich core are made of titanium material). During high-speed flight, the hot side of the panel will be heated to higher temperatures than the cooler side, resulting in the buildup of a severe temperature gradient across the panel depth. Under this type of thermal loading, several phenomena could happen. The typical ones are (1) debonding between the heated face sheet and the sandwich core if the interfacial shear stresses exceed the shear bonding strength, and (2) thermal buckling of the heated face sheet if the temperature gradient across the sandwich panel is too severe.

This report presents thermal stress analysis of the titanium sandwich panel, and examines whether these phenomena will take place under the proposed service heating conditions and laboratory test conditions of the sandwich panel.

NOMENCLATURE

a	length of sandwich panel, in.
a_{mn}	Fourier coefficient of assumed deflection function for $w(x, y)$
b	width of sandwich panel, in.
D	face sheet flexural rigidity, $\frac{E_s t_s^3}{12(1-\nu_s^2)}$, in-lb
E_s	modulus of elasticity of face sheet material, lb/in^2
E_x, E_y, E_z	moduli of elasticity of sandwich core, lb/in^2
G_s	shear modulus of face sheet material, lb/in^2
G_{xy}, G_{yz}, G_{zx}	shear moduli of sandwich core, lb/in^2
h_c	sandwich-core depth, in.
m	number of buckle half waves in x-direction
N_x	panel compressive load in x-direction, lb/in.
$(N_x)_{cr}$	panel compressive buckling load in x-direction, lb/in.
N_y	panel compressive load in y-direction, lb/in.
n	number of buckle half waves in y-direction
SPAR	structural performance and resizing
t_s	thickness of face sheets, in.
ΔU_1	strain energy of plate bending, in-lb

ΔU_2	strain energy of elastic foundation, in-lb
ΔW	work done by external forces, in-lb
w	face sheet out-of-plane deflection, in.
x, y	rectangular Cartesian coordinates, in.
α_c	coefficient of thermal expansion of sandwich core, in./in.-°F
α_s	coefficient of thermal expansion of face sheet, in./in.-°F
β	foundation modulus, $\frac{E_z}{h_c}$, lb/in.-in^2
γ_c	weight density of sandwich core, lb/in^3
γ_s	weight density of face sheet material, lb/in^3
ν_s	Poisson ratio of face sheet material
$\nu_{xy}, \nu_{yz}, \nu_{xz}$	Poisson ratios of sandwich core
σ_{fx}	normal stress in face sheet in the x direction, lb/in^2
τ_{cxz}	interfacial shear stress, lb/in^2

DESCRIPTION OF PROBLEM

Figure 1 shows the rectangular honeycomb-core sandwich panel under consideration. The panel is subjected to heating with a temperature gradient across its depth. Under such thermal loading, debonding between the heated face sheet and the sandwich core or thermal buckling of the heated face sheet could occur if the thermal gradient across the sandwich depth is too steep.

The problem is to perform thermal stress analysis and thermal buckling analysis of the sandwich panel and to examine whether these two phenomena might take place under the proposed service heating condition of the sandwich panel.

THERMAL STRESS ANALYSIS

In the thermal stress analysis, the sandwich material will be considered linearly elastic (neglecting thermal creep effect), and the edges of the sandwich panel will be clamped.

The thermal stress analysis will yield compressive stress distribution in the heated face sheet and will yield the interfacial shear stress distribution built up at the interface between the heated face sheet and the sandwich core. The face sheet peak compressive stress will then be compared with the thermal buckling stress of the heated face sheet, and the peak interfacial shear stress with the interfacial shear bonding strength.

The structural performance and resizing (SPAR) finite element computer program (ref. 1) was used in the thermal stress analysis. Figure 2 shows a SPAR finite element model set up for a thin strip of the sandwich panel along the $y = b/2$ line. Each of the face sheets was modeled with only one layer of elements in thickness direction, and the sandwich core with six layers of elements in thickness direction. Because of steep stress gradients near the panel edges, the element densities were increased in two steps near the panel edge for obtaining smooth stress distributions in this region.

THERMAL BUCKLING ANALYSIS

When the upper face sheet is heated more than the lower face sheet, the upper face sheet will be under compression (upper part of fig. 3). If the sandwich core is considered as a spring, the situation could be approx-

imated by the buckling of a single face sheet on elastic foundation, as shown in the lower part of figure 3.

In the thermal buckling analysis of the heated face sheet, the energy method will be used. Let $\Delta U_1, \Delta U_2, \Delta W$ be, respectively, the strain energy of plate bending, strain energy of elastic foundation, and the work done by the external forces. At thermal buckling the following energy balance must hold:

$$\Delta U_1 + \Delta U_2 = \Delta W \tag{1}$$

These three energy terms may be expressed in terms of plate deflection $w(x, y)$ as follows:

Strain energy of bending ΔU_1:

$$\Delta U_1 = \frac{D}{2}\int_0^a\int_0^b \left\{\left(\frac{\partial^2 w}{\partial x^2} + \frac{\partial^2 w}{\partial y^2}\right)^2 - 2(1-\nu_s)\left[\frac{\partial^2 w}{\partial x^2}\frac{\partial^2 w}{\partial y^2} - \left(\frac{\partial^2 w}{\partial x \partial y}\right)^2\right]\right\} dxdy \tag{2}$$

where D is the face-sheet flexural rigidity given by

$$D = \frac{E_s t_s^3}{12(1-\nu_s^2)} \tag{3}$$

where E_s, ν_s, t_s are, respectively, face sheet modulus of elasticity, face sheet Poisson's ratio, and face sheet thickness.

Strain energy of elastic foundation (ΔU_2):

$$\Delta U_2 = \frac{\beta}{2}\int_0^a\int_0^b w^2\, dxdy \tag{4}$$

where β is the foundation modulus, given by

$$\beta = \frac{E_z}{h_c} \tag{5}$$

where E_z and h_c are, respectively, modulus of elasticity and depth of the sandwich core.

Work due to external forces (ΔW):

$$\Delta W = \frac{1}{2}\int_0^a\int_0^b \left[N_x\left(\frac{\partial w}{\partial x}\right)^2 + N_y\left(\frac{\partial w}{\partial x}\right)^2\right] dxdy \tag{6}$$

where N_x and N_y are, respectively, the compressive panel loads in the x- and y-direction in the face sheet.

For simply supported edges, the face sheet deflection surface may be represented by the following double Fourier series (ref. 2):

$$w(x, y) = \sum_{m=1}^{\infty}\sum_{n=1}^{\infty} a_{mn} \sin\frac{m\pi x}{a} \sin\frac{n\pi y}{b} \tag{7}$$

where a_{mn} is the deflection coefficient, a and b are the length and the width of the sandwich panel, respectively, and m and n are the number of buckle half waves in the x- and y-directions, respectively.

Substituting equation (7) into equations (2), (4), and (6) yields

$$\Delta U_1 = \frac{ab}{8} D \sum_{m=1}^{\infty}\sum_{n=1}^{\infty} a_{mn}^2 \left(\frac{m^2\pi^2}{a^2} + \frac{n^2\pi^2}{b^2}\right)^2 \tag{8}$$

$$\Delta U_2 = \frac{ab}{8}\beta \sum_{m=1}^{\infty}\sum_{n=1}^{\infty} a_{mn}^2 \tag{9}$$

$$\Delta W = \frac{ab}{8}\pi^2 \left[\frac{N_x}{a^2}\sum_{m=1}^{\infty}\sum_{n=1}^{\infty} m^2 a_{mn}^2 + \frac{N_y}{b^2}\sum_{m=1}^{\infty}\sum_{n=1}^{\infty} n^2 a_{mn}^2\right] \tag{10}$$

In the light of equations (8) through (10), the buckling equation (eq. 1) takes on the form

$$N_x = \frac{\pi^4 D \sum_{m=1}^{\infty}\sum_{n=1}^{\infty} a_{mn}^2 \left(\frac{m^2}{a^2} + \frac{n^2}{b^2}\right)^2 + \beta \sum_{m=1}^{\infty}\sum_{n=1}^{\infty} a_{mn}^2}{\frac{\pi^2}{a^2}\left[\sum_{m=1}^{\infty}\sum_{n=1}^{\infty} m^2 a_{mn}^2 + \frac{a^2}{b^2}\frac{N_y}{N_x}\sum_{m=1}^{\infty}\sum_{n=1}^{\infty} n^2 a_{mn}^2\right]} \tag{11}$$

This expression becomes a minimum if all the coefficients a_{mn}, except one, are taken to be zero (ref. 2). Thus, the minimum buckling load is given by

$$(N_x)_{cr} = \frac{\pi^4 D \left(\frac{m^2}{a^2} + \frac{n^2}{b^2}\right)^2 + \beta}{\pi^2 \left(\frac{m^2}{a^2} + \frac{N_y}{N_x}\frac{n^2}{b^2}\right)} \tag{12}$$

For thermal loading with constrained edges, $N_x = N_y$, and equation (12) becomes

$$(N_x)_{cr} = D\pi^2 \left(\frac{m^2}{a^2} + \frac{n^2}{b^2}\right) + \frac{\beta}{\pi^2 \left(\frac{m^2}{a^2} + \frac{n^2}{b^2}\right)} \tag{13}$$

For a fixed a and b, the value of $(N_x)_{cr}$ will become lowest at particular combinations of m and n.

To find the functional relationship between m and n which gives lowest value of $(N_x)_{cr}$, we differentiate equation (13) with respect to m or n, and set the derivatives to zero:

$$\frac{\partial (N_x)_{cr}}{\partial m} = \frac{\partial (N_x)_{cr}}{\partial n} = 0 \tag{14}$$

from which we obtain

$$\frac{m^2}{a^2} + \frac{n^2}{b^2} = \frac{1}{\pi^2}\sqrt{\frac{\beta}{D}} \tag{15}$$

or

$$\frac{m^2}{\left(\frac{a}{\pi}\sqrt[4]{\frac{\beta}{D}}\right)^2} + \frac{n^2}{\left(\frac{b}{\pi}\sqrt[4]{\frac{\beta}{D}}\right)^2} = 1 \tag{16}$$

which is the equation of ellipse in the m-n space shown in figure 4.

Substituting equation (15) into equation (13) yields the lowest buckling load of $(N_x)_{cr}$:

$$(N_x)_{cr} = 2\sqrt{D\beta} \tag{17}$$

Equation (17) is independent of panel aspect ratio, and is subjected to the condition in equation (15) or (16) which relate m to n.

For a square panel $a = b$, and equation (15) becomes

$$m^2 + n^2 = \frac{a^2}{\pi^2}\sqrt{\frac{\beta}{D}} \tag{18}$$

which describes a circular arc in the m-n space for which $m \geq 1$ and $n \geq 1$.

NUMERICAL EXAMPLES

The titanium honeycomb-core sandwich panel, which has been designed and fabricated for testing in the NASA Ames Research Center's Dryden Thermostructures Research Facility, has the following geometry and material properties. Geometry:

$$a = b = 24 \text{ in.}$$
$$h_c = 0.69 \text{ in.}$$
$$t_s = 0.06 \text{ in.}$$

Material properties of titanium face sheets:

ITEMS	300°F	900°F
E_s, lb/in^2	15.1×10^6	11.8×10^6
G_s, lb/in^2	5.7634×10^6	4.5038×10^6
ν_s	0.31	0.31
α_s, in./in.-°F	5.1×10^{-6}	5.6×10^{-6}
γ_s, lb/in^3	0.16	0.16

Material properties of titanium honeycomb core:

ITEMS	600°F
E_x, lb/in^2	2.7778×10^4
E_y, lb/in^2	2.7778×10^4
E_z, lb/in^2	2.7778×10^5
G_{xy}, lb/in^2	0.00613
G_{yz}, lb/in^2	1.81×10^5
G_{zx}, lb/in^2	0.81967×10^5
ν_{xy}	0.658×10^{-2}
ν_{yz}	0.643×10^{-6}
ν_{xz}	0.643×10^{-6}
α_c, in./in.-°F	5.35×10^{-6}
γ_c, lb/in^3	3.674×10^{-3}

The sandwich panel will be subjected to the proposed service thermal loading condition of 300°F on the lower face (T_ℓ = 300 °F), and 900°F on the upper face (T_u = 900 °F). Thus, it will be under the temperature gradient of $(T_u - T_\ell)/h_c = 600\,°\text{F}/h_c$. The four edges of the sandwich panel will be restrained with resisting moments to keep the panel flat during thermal loading. This edge condition will induce the highest compressive stresses in the upper face sheet (away from the edges).

In the finite element computations, dissimilar material properties will be used for the lower and the upper face sheets. However, for the honeycomb core, the averaged material properties at 600°F will be used.

RESULTS

Figure 5 shows the distributions of the magnitude of the normal stress σ_{fx} in the face sheets and the interfacial shear stress τ_{cxz} in the $y = b/z$ plane, calculated from the finite element analysis. The normal stress σ_{fx} is maximum at the panel center with the value $(\sigma_{fx})_{max}$ = 23,193 lb/in. and remains almost constant up to 6 in. from the panel

center, and then monotonically decreases to zero at the panel edge. On the other hand, τ_{cxz} is zero in the panel center region up to 6 in. from the panel center, and increases rapidly to its peak value of $(\tau_{cxz})_{max} = 706$ lb/in^2 near the panel edge. It then decreases sharply to zero at the panel edge. For this low value of interfacial shear stress, it is unlikely that the interfacial shear debonding will take place under the proposed service thermal loading.

Next, we will examine whether the compressive stress generated in the upper face sheet will cause it to buckle. The compressive panel load in the upper face sheet is given by

$$N_x = N_y = (\sigma_{fx})_{max}\, t_s = 1392 \text{ lb/in}.$$

From equation (17), the lowest buckling load for the present case is

$$(N_x)_{cr} = 2\sqrt{D\beta} = 19,452 \text{ lb/in}.$$

for all combinations of m and n.

Thus, the induced compressive panel load in the upper face sheet is approximately 7 percent of the predicted buckling load, and the possibility of face sheet buckling is quite remote. Figure 6 shows $(N_x)_{cr}$ (eq. (13)) plotted as a function of m for $n = 1$ and for $n = m$. For $n = 1$ the lowest buckling load occurred at $m = 49$, and for $n = m$ it occurred at $m = 35$. The level of compressive panel load induced in the upper face sheet is shown for comparison with the predicted buckling loads. Figure 7 shows the buckling load surface plotted in the m-n space. The lowest compressive buckling load points form a circular arc at the height of $(N_x)_{cr} = 2\sqrt{D\beta}$ measured from the m-n plane (horizontal plane).

CONCLUSIONS

Thermal stress analysis was performed on a titanium honeycomb-core sandwich panel subjected to heating with a temperature gradient across its depth. The magnitude of the interfacial shear stress induced under the proposed thermal loading was relatively low and would not cause interfacial debonding between the face sheets and the sandwich core.

Also, thermal buckling of the heated face sheet was analyzed by assuming the face sheet to be resting on an elastic foundation which is the sandwich core. The calculated compressive thermal stress induced in the heated face sheet was approximately 7 percent of the compressive buckling stress predicted from the buckling analysis. Thus, the heated face sheet is unlikely to buckle under the proposed thermal loading.

Ames Research Center
Dryden Flight Research Facility
National Aeronautics and Space Administration
Edwards, California, September 27, 1990

REFERENCES

1. Whetstone, W.D., *SPAR Structural Analysis System Reference Manual, System Level 13A, Vol. 1, Program Execution*, NASA CR-158970-1, 1978.

2. Timoshenko, S.P. and J.M. Gere, *Theory of Elastic Stability*, McGraw-Hill Book Company, Inc., New York, 1961.

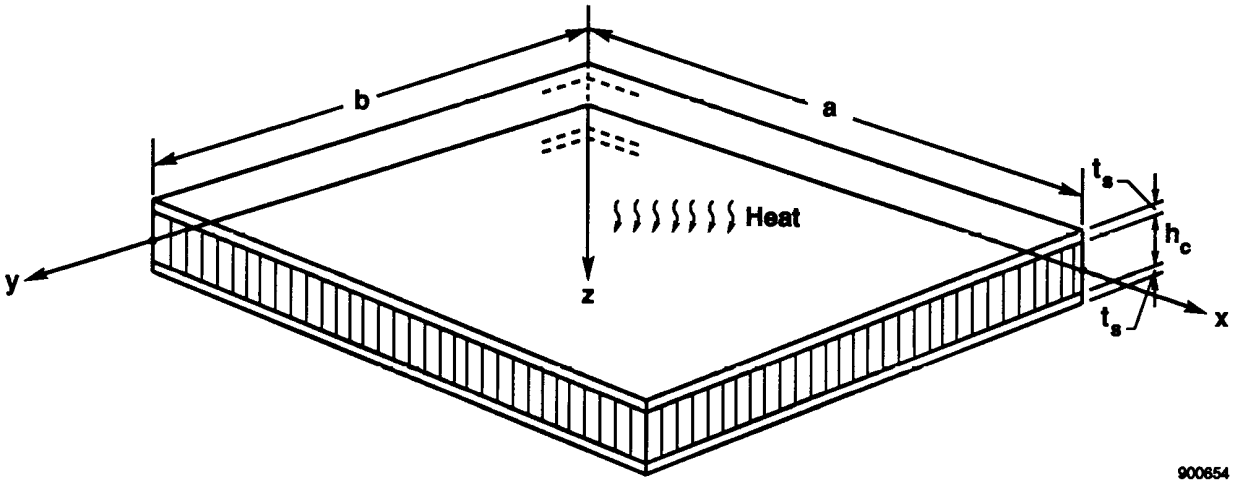

Figure 1. Rectangular sandwich panel subjected to thermal loading.

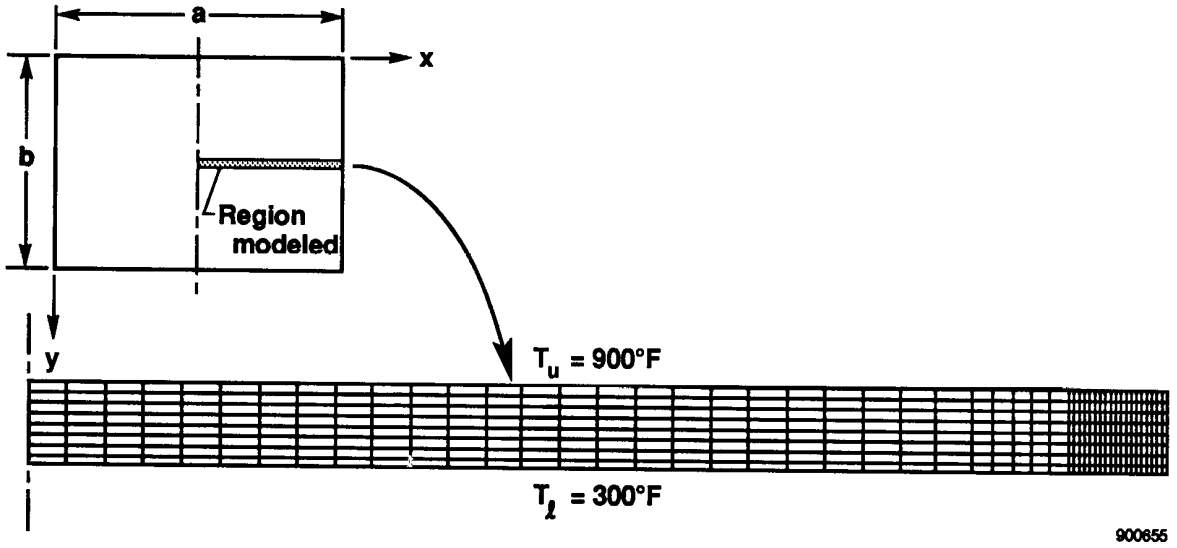

Figure 2. Finite element model for a thin strip of sandwich panel along $y = \frac{b}{2}$ plane.

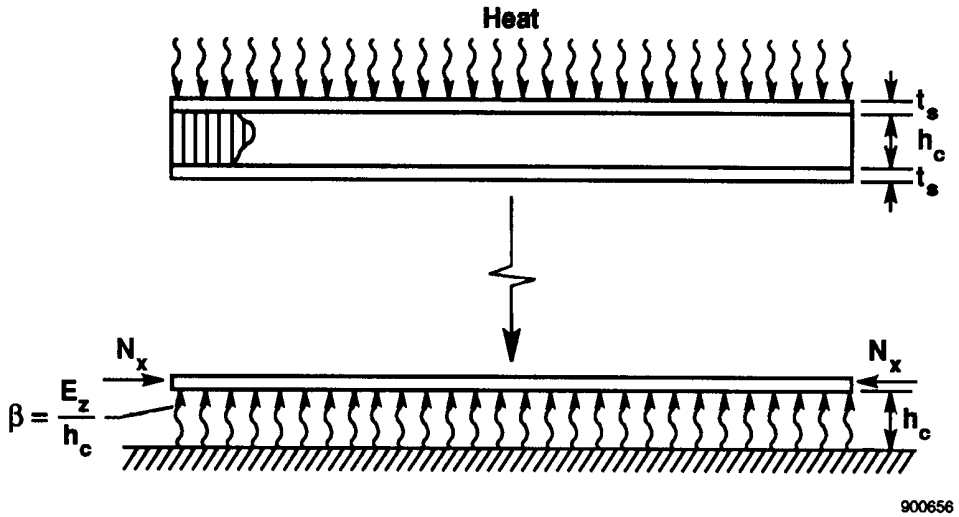

Figure 3. Representation of thermal buckling of heated face sheet of sandwich panel by compressive buckling of thin plate on an elastic foundation.

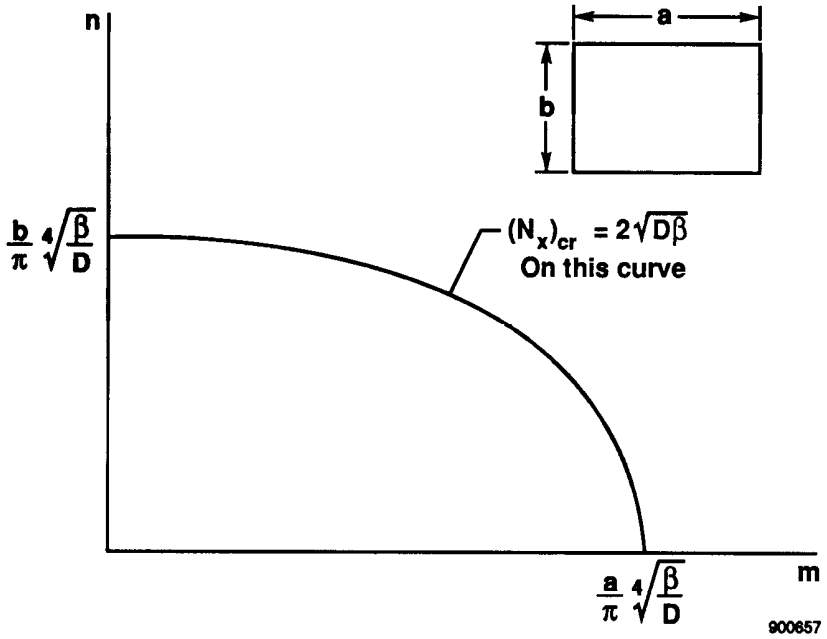

Figure 4. $(N_x)_{cr}$ = Minimum curve for regtangular sandwich panel.

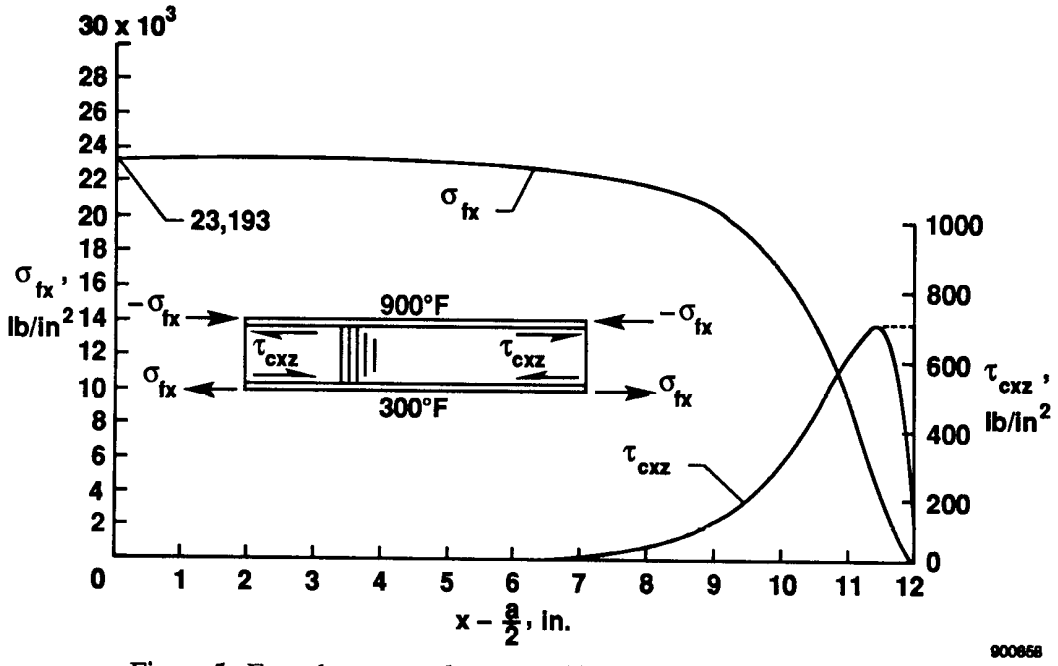

Figure 5. Face sheet normal stress and interfacial shear stress induced in titanium sandwich panel under thermal load.

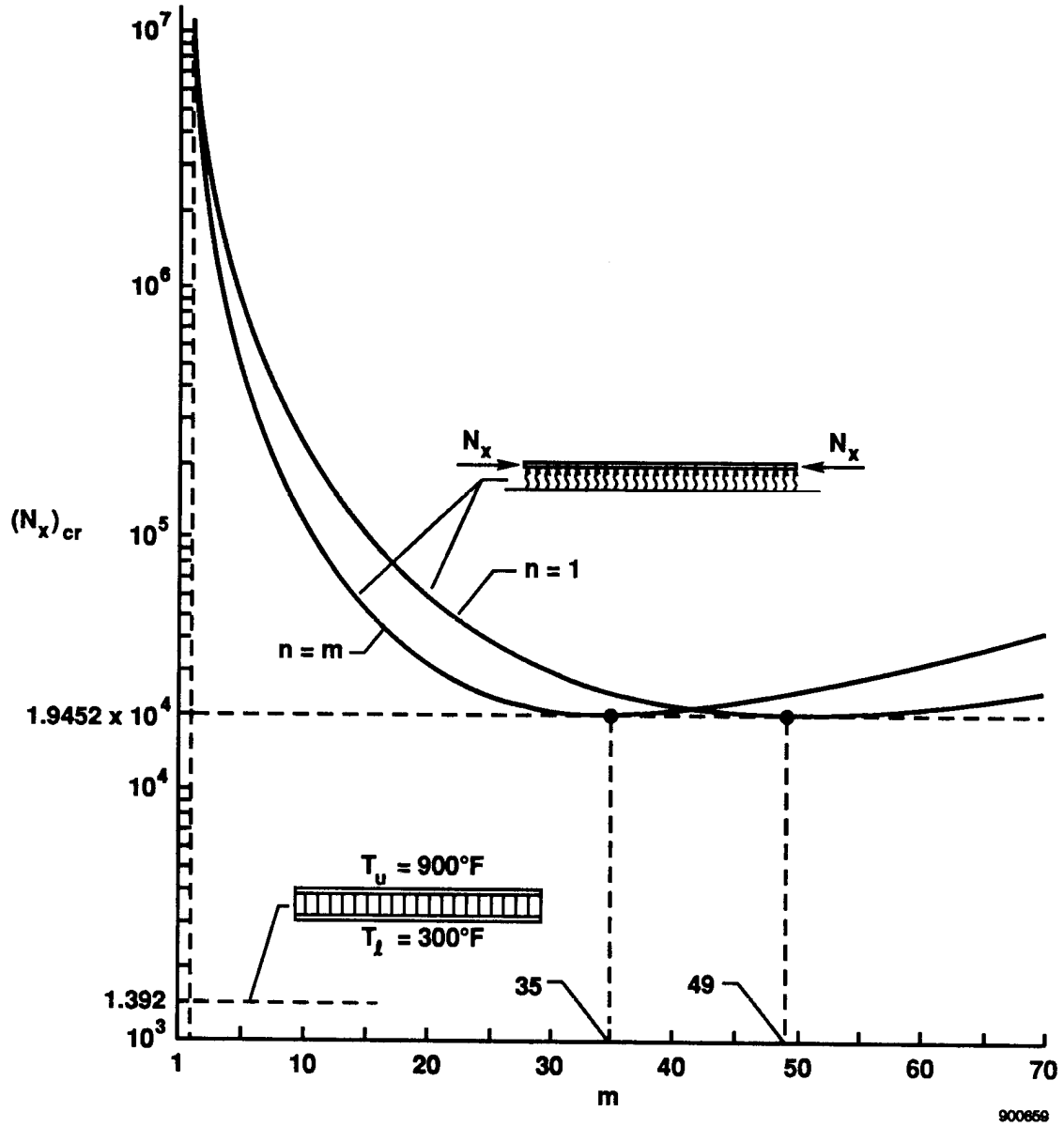

Figure 6. Titanium honeycomb-core sandwich panel face sheet buckling loads under thermal loading.

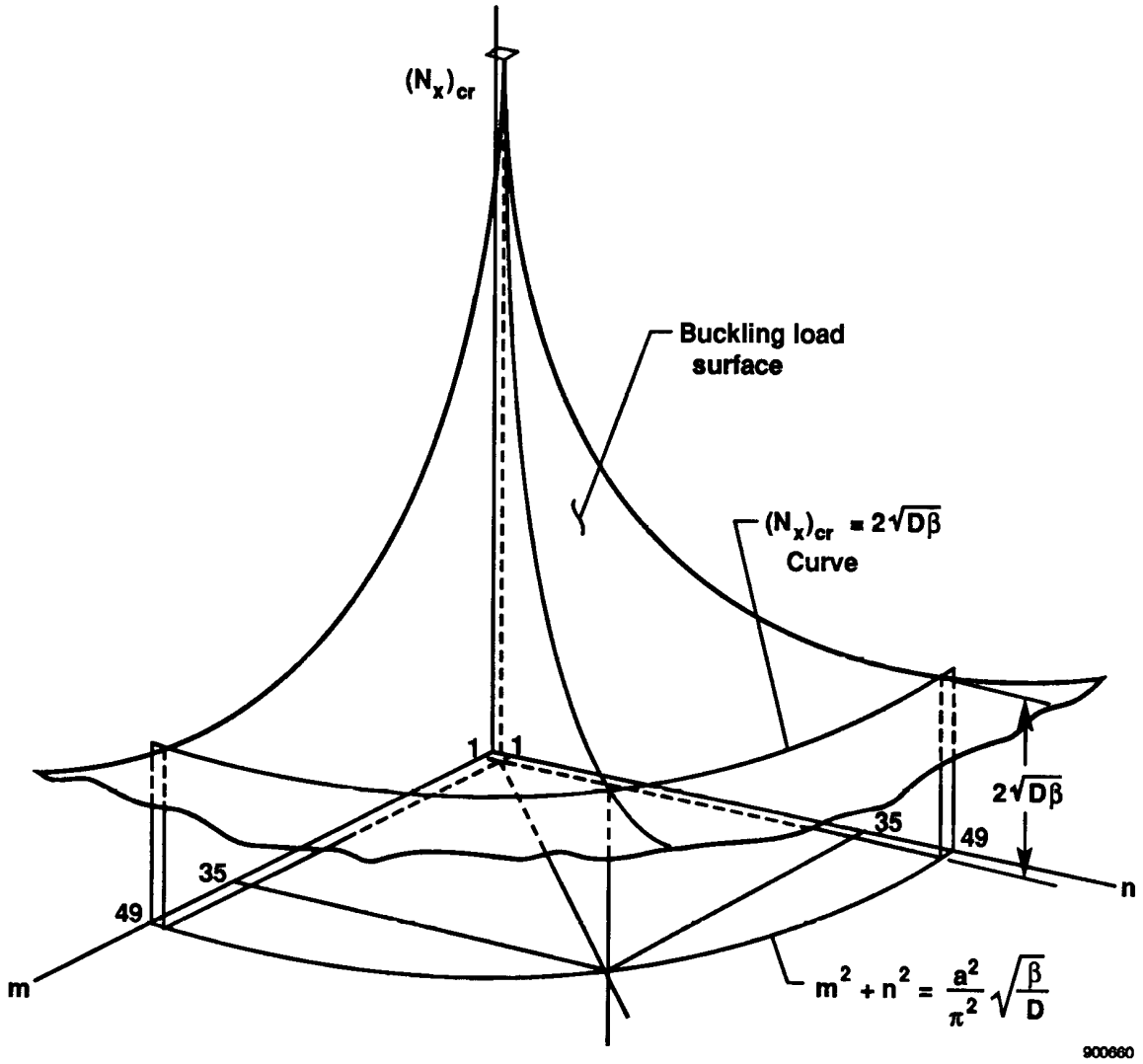

Figure 7. Thermal buckling load surface in m-n space for titanium honeycomb-core sandwich panel face sheet, $a = b$.

NASA
National Aeronautics and Space Administration

Report Documentation Page

1. Report No. NASA TM-101732	2. Government Accession No.	3. Recipient's Catalog No.
4. Title and Subtitle Thermal Behavior of a Titanium Honeycomb-Core Sandwich Panel		5. Report Date January 1991
		6. Performing Organization Code
7. Author(s) William L. Ko and Raymond H. Jackson		8. Performing Organization Report No. H-1661
		10. Work Unit No. RTOP 532-09-01
9. Performing Organization Name and Address NASA Ames Research Center Dryden Flight Research Facility P.O. Box 273, Edwards, California 93523-0273		11. Contract or Grant No.
		13. Type of Report and Period Covered Technical Memorandum
12. Sponsoring Agency Name and Address National Aeronautics and Space Administration Washington, DC 20546-3191		14. Sponsoring Agency Code

15. Supplementary Notes

16. Abstract

Finite element thermal stress analysis was performed on a rectangular titanium honeycomb-core sandwich panel which is subjected to thermal load with a temperature gradient across its depth. The distributions of normal stresses in the face sheets and the face-sheet/sandwich-core interfacial shear stresses are presented. The thermal buckling of the heated face sheet was analyzed by assuming the face sheet to be resting on an elastic foundation representing the sandwich core. Thermal buckling curves and thermal buckling load surface are presented for setting the limit for temperature gradient across the panel depth.

17. Key Words (Suggested by Author(s)) Sandwich panel; thermal stresses; thermal buckling; buckling load curves and surface.		18. Distribution Statement Unclassified-Unlimited Subject category 39	
19. Security Classif. (of this report) Unclassified	20. Security Classif. (of this page) Unclassified	21. No. of Pages 14	22. Price A02

NASA FORM 1626 OCT 86 *For sale by the National Technical Information Service, Springfield, Virginia 22161-2171*