NASA/TM-1998-206567

Flight Testing the Linear Aerospike SR-71 Experiment (LASRE)

Stephen Corda, Bradford A. Neal,
Timothy R. Moes, Timothy H. Cox,
Richard C. Monaghan, Leonard S. Voelker,
Griffin P. Corpening, and Richard R. Larson
Dryden Flight Research Center
Edwards, California

Bruce G. Powers
Analytical Services and Materials, Inc.
Hampton, Virginia

September 1998

The NASA STI Program Office . . . in Profile

Since its founding, NASA has been dedicated to the advancement of aeronautics and space science. The NASA Scientific and Technical Information (STI) Program Office plays a key part in helping NASA maintain this important role.

The NASA STI Program Office is operated by Langley Research Center, the lead center for NASA's scientific and technical information. The NASA STI Program Office provides access to the NASA STI Database, the largest collection of aeronautical and space science STI in the world. The Program Office is also NASA's institutional mechanism for disseminating the results of its research and development activities. These results are published by NASA in the NASA STI Report Series, which includes the following report types:

- TECHNICAL PUBLICATION. Reports of completed research or a major significant phase of research that present the results of NASA programs and include extensive data or theoretical analysis. Includes compilations of significant scientific and technical data and information deemed to be of continuing reference value. NASA's counterpart of peer-reviewed formal professional papers but has less stringent limitations on manuscript length and extent of graphic presentations.

- TECHNICAL MEMORANDUM. Scientific and technical findings that are preliminary or of specialized interest, e.g., quick release reports, working papers, and bibliographies that contain minimal annotation. Does not contain extensive analysis.

- CONTRACTOR REPORT. Scientific and technical findings by NASA-sponsored contractors and grantees.

- CONFERENCE PUBLICATION. Collected papers from scientific and technical conferences, symposia, seminars, or other meetings sponsored or cosponsored by NASA.

- SPECIAL PUBLICATION. Scientific, technical, or historical information from NASA programs, projects, and mission, often concerned with subjects having substantial public interest.

- TECHNICAL TRANSLATION. English-language translations of foreign scientific and technical material pertinent to NASA's mission.

Specialized services that complement the STI Program Office's diverse offerings include creating custom thesauri, building customized databases, organizing and publishing research results . . . even providing videos.

For more information about the NASA STI Program Office, see the following:

- Access the NASA STI Program Home Page at ***http://www.sti.nasa.gov***

- E-mail your question via the Internet to help@sti.nasa.gov

- Fax your question to the NASA Access Help Desk at (301) 621-0134

- Telephone the NASA Access Help Desk at (301) 621-0390

- Write to:
  NASA Access Help Desk
  NASA Center for AeroSpace Information
  7121 Standard Drive
  Hanover, MD 21076-1320

NASA/TM-1998-206567

Flight Testing the Linear Aerospike SR-71 Experiment (LASRE)

Stephen Corda, Bradford A. Neal,
Timothy R. Moes, Timothy H. Cox,
Richard C. Monaghan, Leonard S. Voelker,
Griffin P. Corpening, and Richard R. Larson
Dryden Flight Research Center
Edwards, California

Bruce G. Powers
Analytical Services and Materials, Inc.
Hampton, Virginia

National Aeronautics and
Space Administration

Dryden Flight Research Center
Edwards, California 93523-0273

September 1998

NOTICE

Use of trade names or names of manufacturers in this document does not constitute an official endorsement of such products or manufacturers, either expressed or implied, by the National Aeronautics and Space Administration.

Available from the following:

NASA Center for AeroSpace Information (CASI)
7121 Standard Drive
Hanover, MD 21076-1320
(301) 621-0390

National Technical Information Service (NTIS)
5285 Port Royal Road
Springfield, VA 22161-2171
(703) 487-4650

FLIGHT TESTING THE LINEAR AEROSPIKE SR-71 EXPERIMENT (LASRE)

Stephen Corda,* Bradford A. Neal,† Timothy R. Moes,‡ Timothy H. Cox,§ Richard C. Monaghan,¶
Leonard S. Voelker,# Griffin P. Corpening,** and Richard R. Larson††
NASA Dryden Flight Research Center
Edwards, CA

Bruce G. Powers‡‡
Analytical Services and Materials, Inc.
Hampton, Virginia

Abstract

The design of the next generation of space access vehicles has led to a unique flight test that blends the space and flight research worlds. The new space vehicle designs, such as the X-33 vehicle and Reusable Launch Vehicle (RLV), are powered by linear aerospike rocket engines. Conceived of in the 1960's, these aerospike engines have yet to be flown, and many questions remain regarding aerospike engine performance and efficiency in flight. To provide some of these data before flying on the X-33 vehicle and the RLV, a spacecraft rocket engine has been flight-tested atop the NASA SR-71 aircraft as the Linear Aerospike SR-71 Experiment (LASRE). A 20 percent–scale, semispan model of the X-33 vehicle, the aerospike engine, and all the required fuel and oxidizer tanks and propellant feed systems have been mounted atop the SR-71 airplane for this experiment. A major technical objective of the LASRE flight test is to obtain installed-engine performance flight data for comparison to wind-tunnel results and for the development of computational fluid dynamics–based design methodologies. The ultimate goal of firing the aerospike rocket engine in flight is still forthcoming. An extensive design and development phase of the experiment hardware has been completed, including approximately 40 ground tests. Five flights of the LASRE and firing the rocket engine using inert liquid nitrogen and helium in place of liquid oxygen and hydrogen have been successfully completed.

Nomenclature

GH_2	gaseous hydrogen
H_2O	water
He	helium
KEAS	equivalent airspeed, knots
LASRE	Linear Aerospike SR-71 Experiment
LN_2	liquid nitrogen
LO_2	liquid oxygen
O_2	oxygen
PCM	pulse code modulator
RLV	Reusable Launch Vehicle
SMART	signal management for analysis in real time
TEA–TEB	Triethyl aluminum–triethyl borane
USAF	United States Air Force

Introduction

The Linear Aerospike SR-71 Experiment (LASRE) (fig. 1)[1] began during the competition to build the X-33 vehicle, a subscale, suborbital, rocket technology demonstrator vehicle for the planned single-stage-to-orbit, rocket-powered Reusable Launch Vehicle (RLV). The LASRE is a flight-test contribution to the

*Stephen Corda, Aerospace Engineer, Propulsion and Performance Branch, (805) 258-2103, stephen.corda@dfrc.nasa.gov
†Bradford A. Neal, Aerospace Engineer, Operations Engineering Branch, (805) 258-3204, brad.neal@dfrc.nasa.gov
‡Timothy R. Moes, Aerospace Engineer, Aerodynamics Branch, (805) 258-3054, tim.moes@dfrc.nasa.gov
§Timothy H. Cox, Aerospace Engineer, Controls Branch, (805) 258-2126, tim.cox@dfrc.nasa.gov
¶Richard C. Monaghan, Aerospace Engineer, Aerostructures Branch, (805) 258-3842, richard.monaghan@dfrc.nasa.gov
#Leonard S. Voelker, Aerospace Engineer, Structural Dynamics Group, (805) 258-3709, len.voelker@dfrc.nasa.gov
**Griffin P. Corpening, Aerospace Engineer, Propulsion and Performance Branch, (805) 258-2497, griff.corpening@dfrc.nasa.gov
††Richard R. Larson, Aerospace Engineer, Systems Engineering Branch, (805) 258-3740, dick.larson@dfrc.nasa.gov
‡‡Bruce G. Powers, Aerospace Engineer, Analytical Services and Materials, Inc., (805) 258-3732, bruce.powers@dfrc.nasa.gov

This paper is declared a work of the U. S. Government and is not subject to copyright protection in the United States.

EC97-44295-108

Figure 1. The LASRE in flight.

Lockheed Martin Skunk Works (Palmdale, California) X-33 proposal. Lockheed Martin subsequently won the X-33 competition with a design that utilizes a flat, triangular planform, lifting-body shape (fig. 2) similar to lifting-body designs that had been tested and flown at Edwards Air Force Base (California) prior to development of the current Space Shuttle. Use of trade names or names of manufacturers in this document does not constitute an official endorsement of such products or manufacturers, either expressed or implied, by the National Aeronautics and Space Administration.

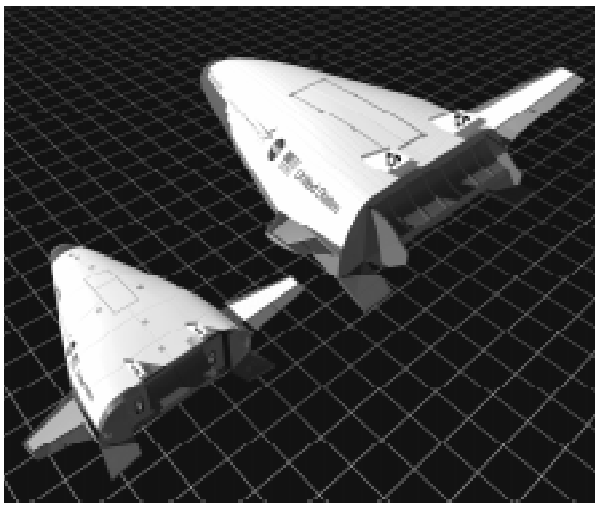

ED97-43938

Figure 2. The X-33 and RLV spacecraft with aerospike rocket engines.

The Aerospike Rocket Engine

A natural synergism exists between this lifting-body shape and a rocket engine configuration called the linear aerospike, first developed in the 1960's.[2–4] The rectangular nozzles of the linear aerospike engine easily integrate into the rectangular base of the lifting body. An aerodynamic advantage is realized because the aerospike engines fill in much of the lifting-body base.

Theoretically, a major advantage of the aerospike rocket engine is the ability of the nozzle to adjust with altitude changes to the free-stream static pressure, which results in a higher specific impulse than a conventional bell nozzle has at low altitudes (fig. 3).[5–7] This altitude compensation is caused by the unique nozzle geometry of the aerospike engine, which has a central ramp terminating in either a plug base or spike in the center and is scarfed, or open, to the atmosphere on the sides.

The term "aerospike" derives from the fact that the central spike need not be a real, solid surface; the spike can be aerodynamically formed by injecting gases from the engine base. The nozzle exhaust flow is free to expand on the open sides and self-adjust to static-pressure changes with altitude. This automatic altitude compensation of the exhaust gases allows the nozzle to run at more optimum conditions than a conventional fixed-geometry, bell-type nozzle, which is designed to be optimum for only one altitude. The aerospike engine can also be built from individual thruster segments that can be turned on and off to provide thrust vectoring to steer the X-33 vehicle, rather than using the heavier, conventional technique of gimbaling, or moving, an entire rocket bell nozzle.

The aerospike concept is not new, and although several large-scale ground tests of the aerospike engine were conducted in the 1970's, no flight data had ever been collected. Ground testing provided only a sea-level data point for the ability of the aerospike nozzle to compensate and adjust to altitude. The question remained as to whether the aerospike nozzle would really compensate for altitude during the rocket ascent and provide better performance. One method to answer this question is to test the aerospike engine in a wind tunnel, which has been done to a limited extent. These wind-tunnel tests involved flowing inert, "cold" gases through the aerospike rocket engine; the rocket engine was not actually fired using combustible fuels. Although these "cold-jet" tests did provide some important altitude compensation data, the missing piece of data is the performance of the aerospike rocket nozzle at

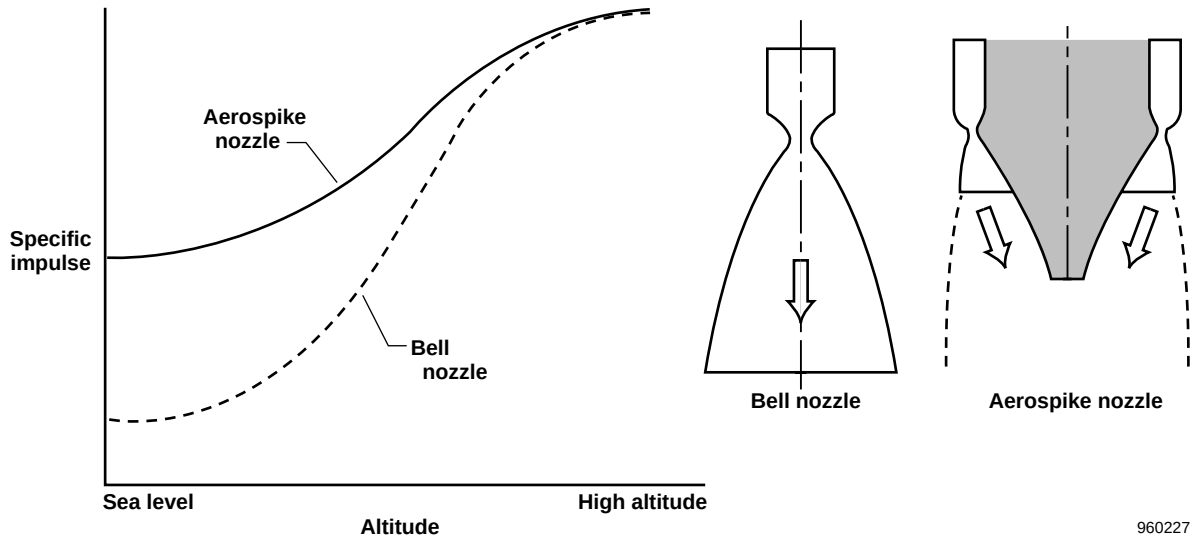

Figure 3. Comparison of flow through conventional bell nozzle and aerospike nozzle.

varying altitudes with a “hot plume” (for instance, hot, combusting gases flowing through the nozzle and interacting with the free-stream air).

Another way to obtain aerospike engine test data is to actually fly an aerospike rocket engine and fire it in flight at various altitudes. The NASA Dryden Flight Research Center (Edwards, California) had already performed design work on a proposed external burning experiment that had many of the salient features required to consider flight test of an aerospike rocket engine on an airplane. NASA Dryden and Lockheed Martin Skunk Works had been working on a flight test, in support of the National Aerospace Plane (NASP) program, that would externally burn hydrogen on a large plate mounted atop the Mach-3 SR-71 aircraft. This design work, coupled with the existing SR-71 legacy of carrying large external payloads such as the D-21 drone, helped increase the feasibility of flying the aerospike engine on the SR-71 airplane. Also, the proposed X-33 ascent trajectory fit within the SR-71 flight envelope to a maximum altitude of approximately 80,000 ft (fig. 4).

This paper details the LASRE flight-test evolution from early configuration development, ground and flight checkouts, and flight test planning and preparation to flight testing. Sample flight test results and analysis are presented in the areas of stability and control, transonic performance, structural loads, structural dynamics, and propellant feed system and aerospike rocket engine performance. Some lessons learned in conducting a complex and hazardous flight test are also presented.

Experiment Flight Test Objectives

The LASRE flight test used a linear aerospike rocket engine mounted in a 20 percent–scale, semispan, X-33–type vehicle. The linear aerospike rocket engine has eight linear, single-thruster-combustor segments (four on each side of the engine) fueled by gaseous hydrogen and liquid oxygen. The major technical objectives were to measure the performance of the installed aerospike rocket engine along the representative RLV trajectory, demonstrate the operation of the aerospike rocket engine in a representative flight environment, and support the development of a computational fluid dynamics–based design methodology for integration of the linear aerospike rocket engine in lifting-body configurations. This flight test also provided a unique opportunity to gain experience with the blending of airplane and space vehicle design, operations, research, and test communities.

The Flight Test Team

The LASRE team is composed of Lockheed Martin Skunk Works; Lockheed Martin Astronautics (Denver, Colorado); Boeing North American/Rocketdyne Division (Canoga Park, California); the U. S. Air Force (USAF) Research Laboratory (formerly the USAF Phillips Laboratory) (Edwards, California); the NASA Marshall Space Flight Center (Huntsville, Alabama); and NASA Dryden. Lockheed Martin Skunk Works was responsible for the design, fabrication, and integration of the LASRE structural hardware and SR-71 aircraft

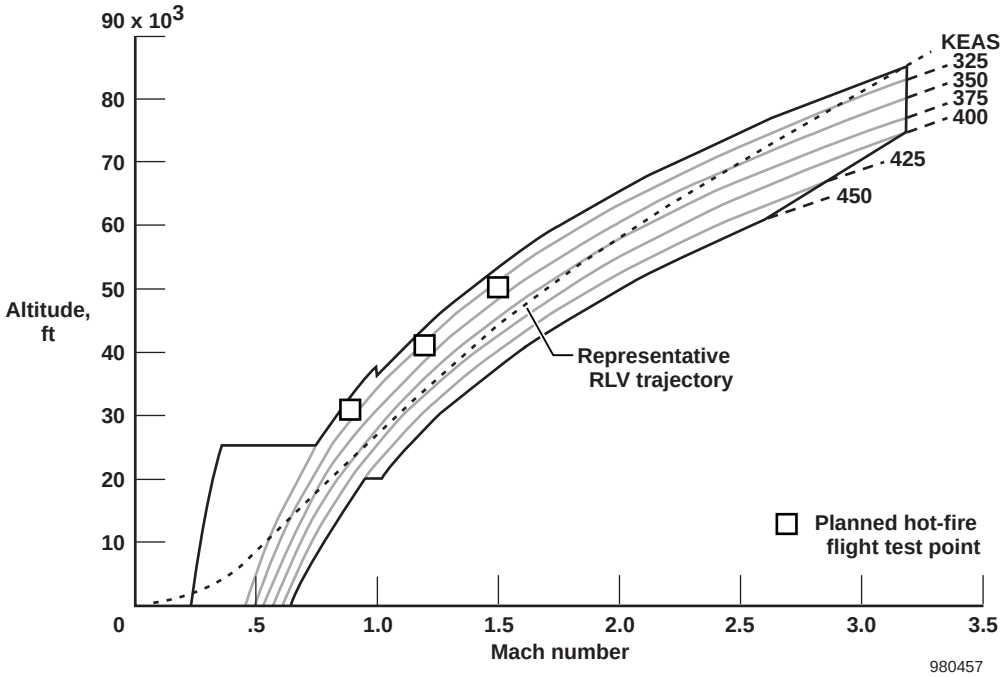

Figure 4. The SR-71 flight envelope with LASRE hot-fire test points.

modifications. Lockheed Martin Astronautics was responsible for the design and fabrication of the propellant feed systems for the rocket engine. Rocketdyne designed and fabricated the linear aerospike rocket engine. The USAF provided their Research Laboratory test facility and technical support for the ground tests. NASA Marshall provided technical expertise for liquid propulsion testing and operations. NASA Dryden provided overall technical support and is the flight test lead.

In addition to the technical challenges, the LASRE flight test was new and unique in another way. This test was the first to be conducted under a new way of doing business for NASA—using the government and industry "cooperative agreement." Under this arrangement, the traditional role of government-dictated requirements and industry-supplied deliverables is replaced by a cooperative structure in which government and industry share the responsibilities, costs, and risks of the endeavor. Without understatement, this shared responsibility was one of the more challenging aspects of this test, especially considering the very different philosophies of the various teammates regarding design methods, test techniques, and risk management.

Experiment Description

The aircraft used to carry the aerospike experiment is the Lockheed-built SR-71 "Blackbird" aircraft. NASA has two SR-71 aircraft on loan from the USAF and operates them as flight research aircraft. The SR-71 aircraft has a rather narrow flight envelope with a maximum cruise performance of approximately Mach 3.2 at altitudes higher than 80,000 ft (fig. 4). The SR-71 aircraft has titanium construction and is painted black to operate at the high temperatures associated with Mach-3 flight (hence its designation as the "Blackbird").

The SR-71 "A" model used in this test has a tandem, two-place cockpit configuration with flight controls in the forward cockpit. The aft cockpit is occupied by a flight test engineer who operates the aerospike engine controls and emergency systems in addition to performing normal radio and navigation duties.

SR-71 Description and Modifications

Modifying the SR-71 airplane to carry the LASRE (fig. 5) and fulfill its role as a true research platform was necessary. Modifications were made to the aircraft structure, flight test instrumentation, the aircraft fuel system, and the aircraft propulsion system.

Structural modifications included strengthening the fuselage and installing attachment hardware to carry the LASRE. The experiment is structurally attached to the top of the fuselage at a single self-aligning ball and at two vertical links and one lateral link. This attachment

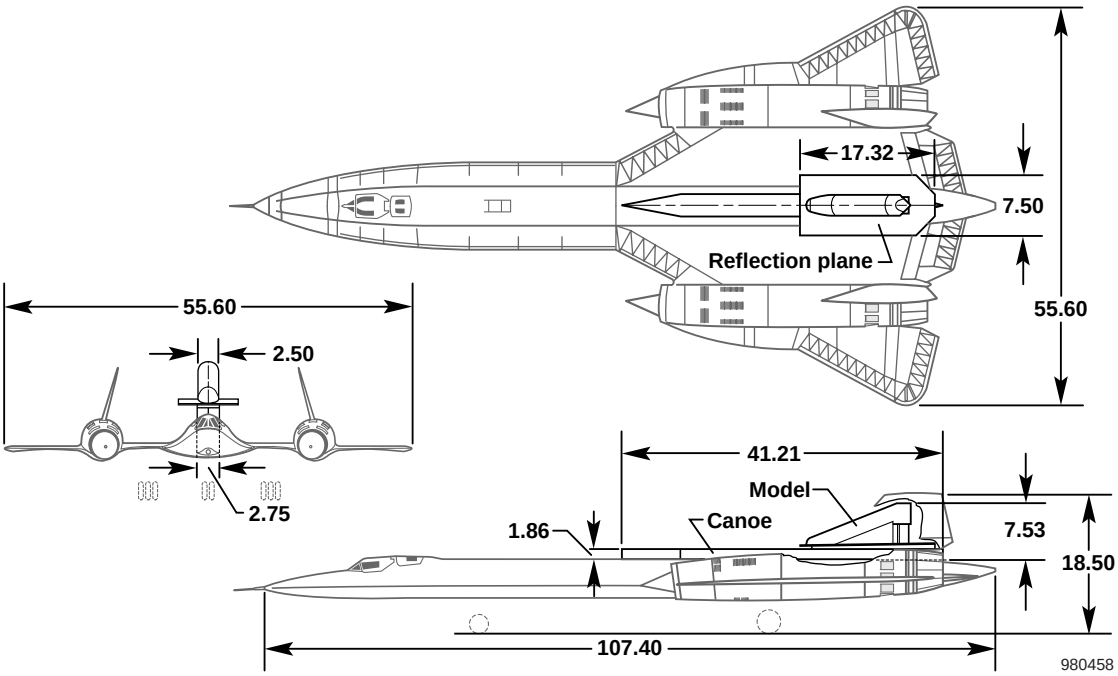

Figure 5. The LASRE pod mounted atop the SR-71 aircraft.

does not affect the normal load paths or stiffness of the basic SR-71 aircraft. The concentrated load points at the attachments required local reinforcement internal to the fuselage to distribute flight loads into the SR-71 airframe. All new structure and existing modified structure used a factor of safety 50 percent greater than the normal aircraft factor of safety to eliminate the need for structural testing. When LASRE flight testing is completed, the fittings at the three external attachment points can be easily removed. All the internal structural reinforcements will remain. The reinforced areas will not affect normal SR-71 operations and could be used for future programs.

Plumbing was also installed to supply gaseous nitrogen from the SR-71 airplane to the experiment for purging. The SR-71 aircraft has several liquid nitrogen–filled Dewar flasks that normally supply gaseous nitrogen to pressurize and make inert the aircraft fuel tanks as the fuel is consumed. Two of these Dewar flasks supply nitrogen gas to purge the inside of the LASRE of oxygen to help mitigate the possibility of fire or explosion in the event of a leak of the hydrogen gas used to fuel the rocket engine.

Aircraft propulsion modifications involved installing two thrust-enhanced Pratt & Whitney (West Palm Beach, Florida) J58 turbojet engines to provide an approximately 5-percent increase in thrust to help overcome the increased drag of the LASRE experiment.[8] The engines were “tuned up” to operate at the top of their performance capability by adjusting the fuel flow, revolutions/min, and exhaust gas temperature. This thrust enhancement was gained at the cost of slightly reduced engine life and more frequent inspections of the engines.

Linear Aerospike SR-71 Experiment Hardware

The LASRE flight test hardware is composed of four elements identified as the “canoe,” the “kayak,” the “reflection plane,” and the “model” (fig. 6). The complete assembly of this hardware is designated the “pod.” The pod is approximately 41.0 ft long and approximately 7.5 ft tall at its highest point, the top of the model. The pod is constructed of common, low-carbon steel and has a total design weight of 14,500 lbm, including the consumables for the experiment. The pod structure was designed with an additional 50-percent factor of safety over normal aircraft structural requirements to eliminate the need for structural ground and flight testing. As previously mentioned, the pod is mounted between the twin vertical rudders of the SR-71 airplane at three hard points on the SR-71 fuselage (fig. 5). The pod is designed to remain attached to the SR-71 airplane and cannot be jettisoned or released in flight.

The canoe is a long, fairing-like structure mounted directly to the SR-71 upper fuselage. The canoe houses

five gaseous hydrogen fuel tanks storing a maximum of 27 lbm of gaseous hydrogen at 6,000 lbf/in^2, two cooling water tanks, and three 10,000–lbf/in^2 helium pressurization tanks (fig.7). Water is used to internally cool the rocket engine. The kayak is a structure above the canoe that sets the incidence angle of the model. The reflection plane is a flat plate that is mounted atop the kayak. The model is a one-half-span lifting-body shape, representative of an X-33–type lifting body, mounted on the reflection plane. Within the model rests the liquid oxygen tank storing a maximum of 335 lbm of liquid oxygen, and two additional 10,000–lbf/in^2 helium pressurization tanks.

One major safety concern was the very high–pressure gases and combustible gases and liquids contained within the pod. The aerospike rocket engine is mounted in the aft end of the model. A hypergolic combination of triethyl aluminum and triethyl borane (TEA–TEB) is used as an ignitor for the rocket, igniting on contact with oxygen. The model is mounted on a force balance that permits the measurement of in-flight forces.

The design challenge of the LASRE propellant feed system is fairly unique. Although the system is not representative of an actual main propulsion rocket system, it does have to meet the safety requirements associated with being mounted in a piloted airplane. Although the feed system is similar to a ground facility system, it is constrained in volume and weight. The volume limitation is dictated by the maximum allowable cross-sectional area that the SR-71 aircraft can carry

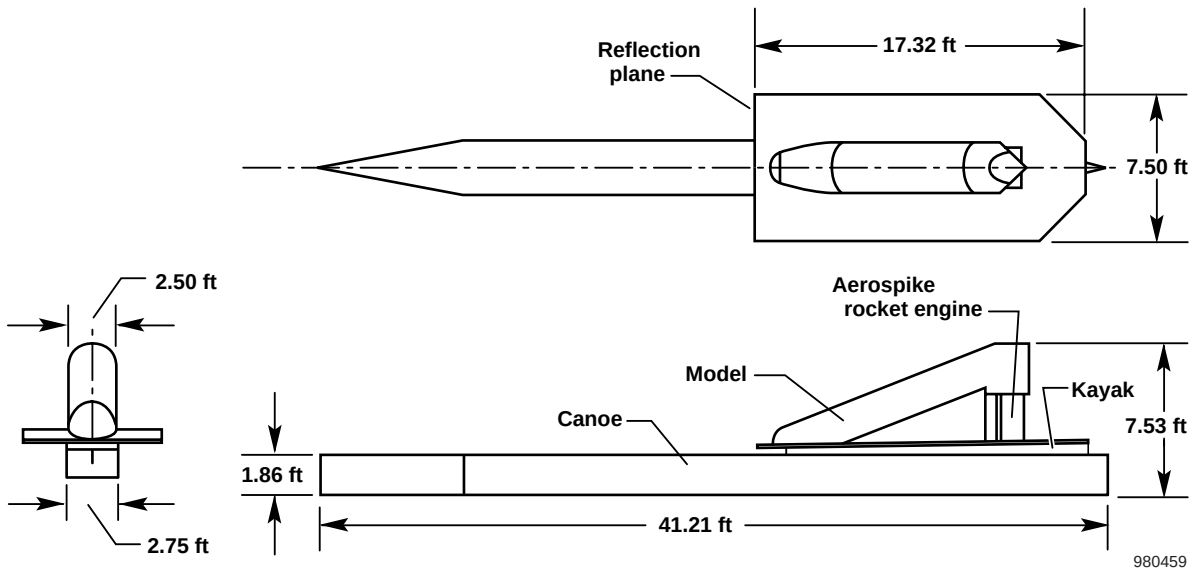

Figure 6. The LASRE pod.

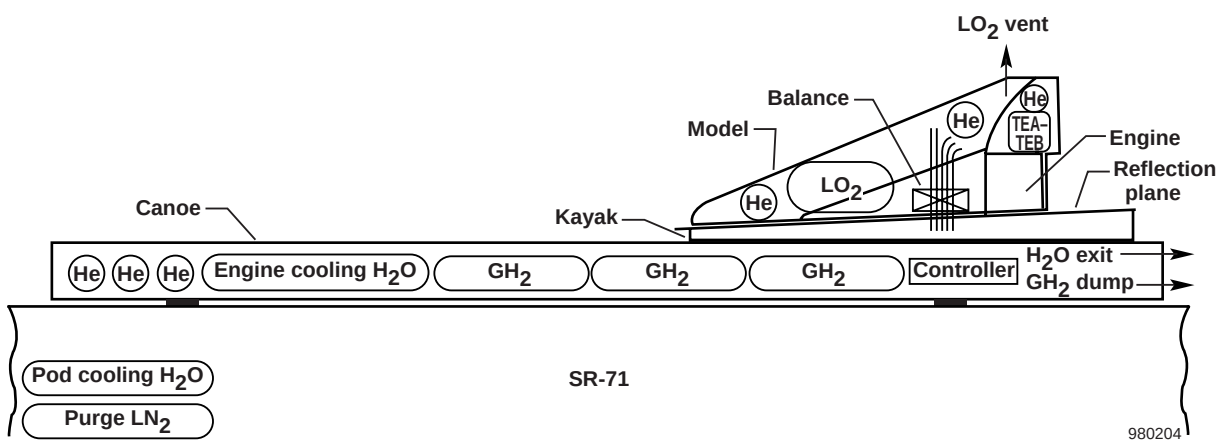

Figure 7. The LASRE pod internal arrangement.

through the high-drag transonic Mach region. The weight constraint is dictated by aircraft performance requirements. Therefore, the amount of each of the consumable commodities is limited. In addition to the physical constraints of the system, intense schedule requirements existed early in the program. To meet the schedule, every effort was made to use off-the-shelf hardware and minimize development costs and component-level testing.

Buried inside the pod are the tankage, plumbing, valves, instrumentation, and controllers required to operate the aerospike rocket engine, making the system essentially self-contained (fig. 7). The LASRE propellant feed system is a pressure-fed system that supplies gaseous hydrogen fuel and liquid oxygen to the aerospike rocket engine. [§§]In addition to being used as a purging gas, high-pressure gaseous helium is used as a pressurant to move the oxidizer and cooling water.

Oxygen sensors were installed in the pod to verify that the nitrogen purge is maintaining the oxygen level at less than 4 percent in flight, the low combustion limit for a hydrogen and oxygen mixture. Note that, similarly, installation of hydrogen sensors was planned for detection of hydrogen leaks. Unfortunately, efforts to flight-qualify an existing hydrogen detection system were unsuccessful.

The aerospike rocket engine is composed of eight single-thruster units, four on each side of the engine (fig 8). The engine is made primarily from copper and copper alloys and is internally water-cooled. The engine is not an X-33 flight weight design, but rather a “boilerplate” design. Each thruster is designed to operate at a relatively low combustor pressure of approximately 200 lbf/in^2, providing a total thrust of approximately 5500 lbf. A 0.3 inch–thick layer of silicone ablative protects the reflection plane from the impingement of the rocket engine exhaust. This material degrades with use but is intended to last the life of the test program.

The LASRE is controlled using a single-channel computer, called the main controller, that sequences the opening and closing of the system valves to fire the rocket engine and safeguard the system after firing. This main controller also monitors critical system parameters, such as the propellant feed system pressures and temperatures.

[§§]Note that the systems used to fuel, control, and fire the LASRE rocket engine are unique to the integration on the SR-71 airplane and do not mirror what will be done on the X-33 vehicle.

A control panel in the aft cockpit of the SR-71 airplane is used to initiate the controller sequences that fire the rocket motor and safeguard the systems. The aft cockpit control panel also allows the aircrew to monitor critical propellant feed system health parameters, such as tank pressures and temperatures. A backup, emergency control system also exists, independent of the LASRE controller, that enables the aircrew to dump and make inert the hydrogen tanks and vent the pressure in the liquid oxygen tank. The normal test sequence consists of a single 3-sec firing of the rocket engine followed by independent dumping of the remaining hydrogen, liquid oxygen, and water.

Figure 9 shows the LASRE system controller architecture. The pod systems are commanded by the main controller, which receives inputs from the instrumentation system and the cockpit control panel. An unusual feature of this architecture is that the experiment or research instrumentation and safety-of-flight instrumentation are on a common system. Typically, the safety-of-flight instrumentation system is independent of the research instrumentation system to avoid losing safety-of-flight information if the research instrumentation fails, which would have meant an unacceptable increase in the size of either the instrumentation system or main controller for the LASRE system. Because the main controller was designed to be fail-safe (as explained below), separating the research and safety-of-flight instrumentation systems was not considered necessary. Control commands for the hydrogen, liquid oxygen, and water system main valves are sent to a controller that operates the valves. Health and status words are also returned to the main controller.

The system was designed to be fail-safe, which means that for any first failure detected by the main controller, the system is shut down in an orderly fashion and enters a safe, “abort” mode. Status words issued by the main controller identify the cause of the failure and are read in real time by special monitoring software and displayed in the mission control center during the flight test. This monitor, called signal management for analysis in real time (SMART), works by executing a knowledge base of Boolean expressions, called rules, at a speed of 100 Hz. When the rules evaluate and verify nominal function of the LASRE system, textural messages are generated with a time tag and shown on a mission control center display. Rules are developed to assist in determining expected prefiring conditions for the rocket engine, postfiring information, and latching for any failure aborts. A message log file is also generated and written to a computer hard disk.

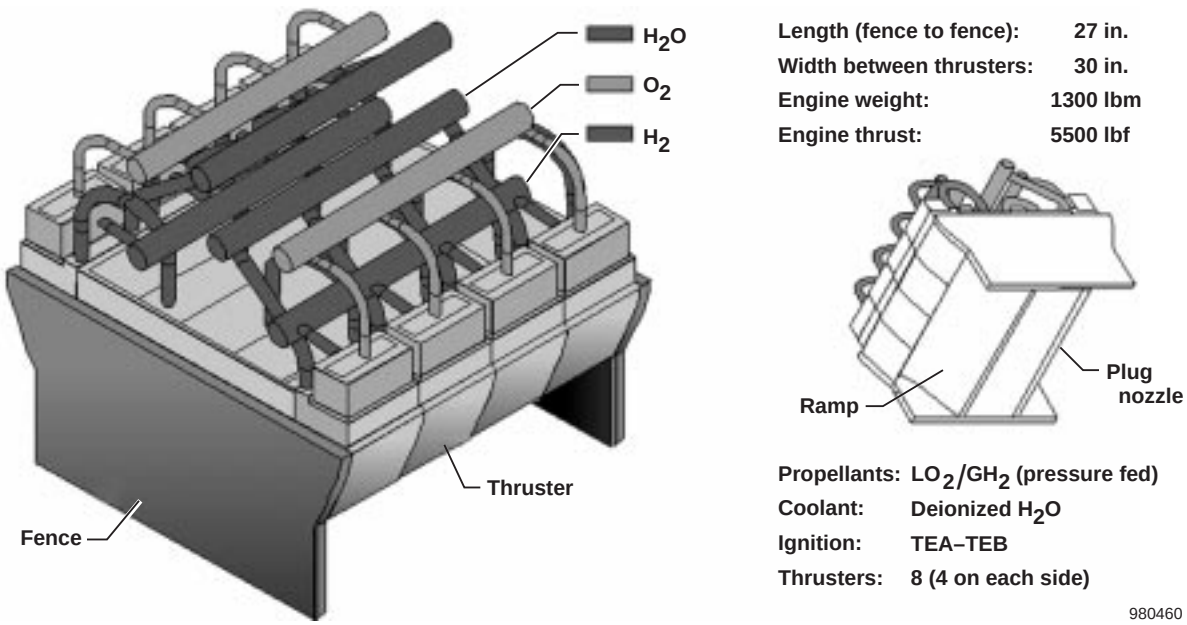

Figure 8. The LASRE aerospike rocket engine.

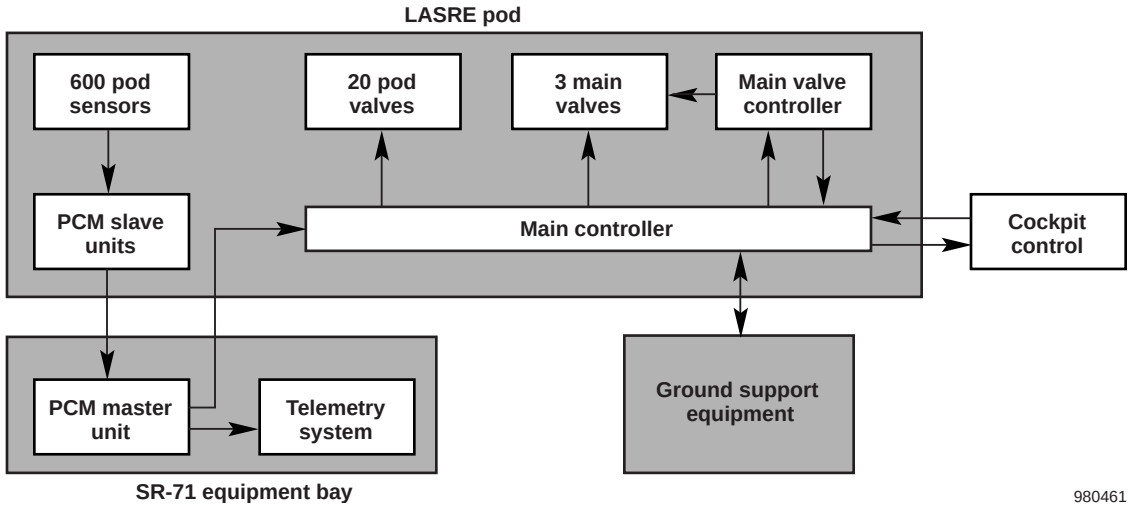

Figure 9. The LASRE controller system architecture.

Ground Testing

Ground testing of the LASRE rocket engine hardware began with tests of a single aerospike engine thruster. Twelve main-stage firings, accumulating approximately 112 sec of “hot-fire” test time, were completed using a nonflight article, single thruster at the Rocketdyne Santa Susanna Field Laboratory. These single-thruster tests established the actual operability and performance of the engine design, including verification of stable combustion. During the twelfth and final single-thruster test, a “burn-through” occurred in the thruster wall because of inadequate water cooling. The cause of this failure was the buildup of calcium carbonate in the water cooling channels caused by the improper use of ordinary tap water instead of deionized water, which severely degraded the cooling efficiency. This failure also showed that the original heat transfer was underpredicted, resulting in a reduction of the normal operating combustion pressure for the rocket engine from 250 to 200 lbf/in^2.

Full testing of the complete LASRE pod was conducted on a rocket engine test stand at the USAF Research Laboratory.[9] The actual flight hardware was used for the Research Laboratory ground testing, which was beneficial in verifying the integrity and proper operation of the actual flight hardware but risked damaging this hardware. These ground tests were not to be a complete ground qualification of the rocket engine system, but rather a verification that the engine could be safely fired and that the emergency and backup systems would keep the SR-71 airplane safe.

These ground tests also provided a valuable training opportunity by running the ground tests similar to a flight operation. The SR-71 aft cockpit experiment control panels were located at the Research Laboratory control room. The NASA Dryden control room was staffed and operated like a flight with communications to the Research Laboratory “SR-71” experiment control. Data were telemetered from the rocket engine test stand to the NASA Dryden control room. The many months of tests and the experience dealing with a myriad of anomalous situations provided excellent control room training for engineers and fine tuning of control room displays prior to an actual flight.

The ground tests at the Research Laboratory included “cold flows” and “hot firings” of the rocket engine. The cold-flow ground tests used inert helium and liquid nitrogen or liquid oxygen to verify the safe operation and acceptable performance of the system before introducing the higher risk of combustible fuels into the rocket system. The hot firings burned hydrogen and liquid oxygen in the rocket engine.

Because the LASRE pod was essentially a new, self-contained rocket engine test stand complete with rocket engine, propellant feed systems, engine system controllers, instrumentation, force balance, and so forth, making this complex system functional and safe was a formidable task. After more than 1 yr and approximately 40 tests of the rocket engine and propellant feed system, two 3-sec hot firings of the aerospike rocket motor had been successfully completed (fig. 10).

The hardware was then transported from the Research Laboratory to NASA Dryden for installation on the SR-71 airplane. Further ground testing was completed at NASA Dryden with the pod attached to the SR-71 airplane. In addition to cold-flow firings of the rocket engine, ground tests were conducted to verify the operability and obtain the performance of the various emergency systems. These emergency systems tests included using the independent hydrogen dump and liquid oxygen vent and executing a cockpit-commanded rocket engine shutdown during a main flow.

Photograph courtesy of the USAF Research Laboratory

Figure 10. Ground hot firing of LASRE aerospike rocket engine.

Flight Test Preparations

The LASRE flight test preparation included extensive flight simulation and an incremental, phased, flight test program. The incremental flight test program included

flying the SR-71 aircraft with and without the LASRE pod attached.

Flight Simulation and Flight Planning

The NASA Dryden SR-71 flight simulator was extensively used for crew training, engineering analyses, and flight planning. Flying qualities of the SR-71 aircraft with a 14,500–lbm rocket test stand on its back were assessed after inputting the aerodynamic model derived from three wind-tunnel entries[10] and various computational fluid dynamics analyses. Performance and flying qualities in all phases of flight were extensively investigated in the simulator. The simulator highlighted such things as the detrimental impact of warmer-than-standard-day temperatures at altitude on the transonic performance of the SR-71 airplane with the pod attached.

In addition to looking at all of the flight characteristics in normal and emergency situations, the effects of firing a 5,500 lbf–thrust rocket engine mounted on the aircraft were evaluated. These effects were investigated assuming the rocket was fired as expected and also for a worst-case scenario of a firing at the instant that the SR-71 airplane had an engine flameout or "unstart." All of these conditions were found to be controllable.

The flight simulator was also extensively used for test route and airspace planning. Route and airspace planning was complicated by the conflicting requirements of wanting to perform the rocket firings near Edwards AFB, minimize any performance-stealing turns during the transonic penetration, stay within reach of the next air refueling, and of course, remain within the airspace lateral and altitude boundaries.

Flight Testing

In addition to using the simulator, flight preparation also included "rehearsal" flights, which were actual flights of the SR-71 airplane without the pod attached during which the aircrew and engineers in the mission control center would rehearse future research missions. These rehearsal flights provided for instrumentation checkout, control room training, functional checks of the enhanced-thrust J58 engines, airdata checkout and calibrations, and aircrew training and proficiency. The rehearsal flights also enabled researchers to obtain SR-71 baseline data for structures, aerodynamics, stability and control, and flutter.

The LASRE flight test followed an incremental, phased approach in which each phase focused on reducing risk in specific areas. The "rehearsal" flight phase consisted of five flights of the SR-71 airplane without the pod installed, with the focus on training and flight route planning. The pod was attached to the SR-71 airplane for the "aero" flight phase, which focused on flight envelope clearance and verification of the leak tightness of the high-pressure pod tankage. Two of these "aero" flights were completed. Envelope clearance consisted of maneuvers flown to obtain data for aerodynamics, stability and control, flutter, structures, and propulsion.

The "cold-flow" flight phase followed and consisted of several flights during which the rocket engine was fired in flight using inert substances (for instance, helium and liquid nitrogen in place of hydrogen and liquid oxygen, respectively). In this phase, the focus was on operational and performance checks of the rocket engine system. Liquid oxygen and TEA–TEB were carried in the "liquid oxygen ignition" flight phase, with the focus on liquid oxygen and TEA–TEB safety. Finally, the focus will be on hydrogen and hot-firing safety in the "hot-fire" flight phase, when hydrogen will be carried and the rocket engine will be hot-fired in flight.

Sample Flight Test Results and Analysis

The following sections present sample LASRE flight test results and analyses for several of the engineering disciplines involved in the test. When possible, the flight test results are compared with the analytical or wind-tunnel predictions.

Stability and Control

The stability and control investigations identified some interesting flying characteristics, especially in the transonic flight regime.[10] Longitudinal and lateral-directional stability and control derivatives for the LASRE configuration were obtained from the stability and control analysis. Acceptable aircraft handling qualities were verified throughout the flight envelope and specifically at the planned rocket engine–firing test points.

Three wind-tunnel tests[11] were performed to determine the aerodynamic characteristics of the LASRE mounted on the SR-71 airplane. Aerodynamic increments were determined with and without the LASRE experiment mounted on the SR-71 airplane. Initial plans of the pod configuration had the model mounted at the front of the canoe, near the aircraft center of gravity, but this arrangement resulted in unacceptable transonic pitching-moment characteristics.

The pod configuration was changed to have the model mounted on the aft end of the canoe, and this configuration resulted in acceptable pitching-moment characteristics. Data from the wind-tunnel tests and from the real-time flight simulations were combined to produce a complete aerodynamic database over the entire flight envelope. A batch flight simulation was also developed based on this data set.

Test maneuvers were flown during the envelope expansion portion of the flight program to verify the wind tunnel–predicted stability and control characteristics of the LASRE configuration. These maneuvers included pitch doublets and yaw-roll doublets at specified Mach and altitude conditions. The stability and control derivatives were obtained from the flight data using the maximum likelihood parameter estimation technique.[12, 13] The maneuvers were flown at the critical boundaries of the LASRE envelope and at the planned aerospike rocket–firing test conditions. The flight results verified the transonic and supersonic predictions of the longitudinal stability and elevon effectiveness derivatives.

The flight-corrected values of the stability and control derivatives and the flight-corrected pitching moment were input into the real-time piloted simulation for handling qualities evaluations. These evaluations included aerospike rocket firings at the specified test conditions and emergency situations such as engine and hydraulic system failures. In all cases, the simulations showed acceptable handling qualities and that the aircraft responses were within acceptable load factor and sideslip limits.

The primary effect of the LASRE on the longitudinal aerodynamics was in the zero-lift pitching moment and drag. The longitudinal stability and lift curve were only slightly changed. No longitudinal dynamic stability analysis was performed. Subsequent parameter estimation[12, 13] of flight test data verified the longitudinal stability and lift curve predictions. The speed stability was examined and found to be better than the basic SR-71 aircraft.

The transonic longitudinal trim characteristics were predicted from wind-tunnel tests to be significantly changed, resulting in a limited trim capability caused by elevon-hinge moments. At approximately Mach 1, an increased pitchup trim requirement (compared to the basic airplane) existed. At approximately Mach 1.2, an increased pitch-down trim requirement existed. These pitch trim requirements had a flight safety impact related to the dual hydraulic systems that power the elevons used to trim the aircraft. With one hydraulic system inoperative, the aircraft was predicted to be elevon-hinge moment–limited in the Mach 1.2 region, which could result in the aircraft departing because of a nontrimmable pitchup condition. Center-of-gravity and airspeed restrictions were therefore developed for the initial flight tests. Additional instrumentation provided hydraulic pressure measurements at the elevon actuators to give an indication of hinge-moment limiting.

The flight tests showed more subsonic pitchup and much less pitch-down tendency in the Mach 1.2 region than predicted (fig. 11). Figure 11 also shows the pitching-moment coefficients for the baseline SR-71 airplane, without the pod attached, for reference.

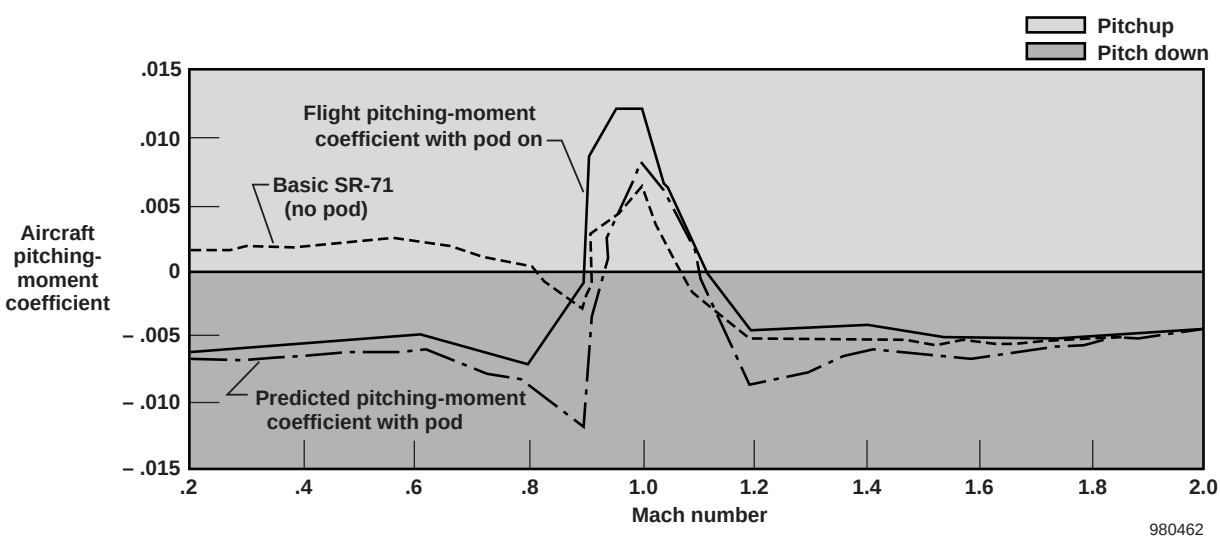

Figure 11. Comparison of the LASRE pitching-moment coefficients.

Although different than predicted, the actual flight pitching moments were not found to be objectionable.

In the lateral-directional axes, wind-tunnel test data indicated that the dihedral effect was reduced and the side force derivative was increased because of the addition of the LASRE. The directional stability was decreased in the subsonic and transonic regions and was increased in the supersonic region to approximately Mach 3. At speeds greater than Mach 3, the directional stability was decreased compared to the basic SR-71 aircraft. The rudder effectiveness was reduced at speeds less than Mach 1.5.

Linear analysis was performed over the entire flight envelope, and aerodynamic parameter sensitivity variations were investigated at selected critical flight conditions. The transonic and very high speed conditions were the most critical conditions, but no serious degradation of flying qualities was found. Transients caused by simultaneously having an SR-71 single-engine failure and firing the aerospike engine were found to be within acceptable sideslip limits throughout the entire flight envelope, if the yaw angle of the aerospike rocket-engine thrust relative to the longitudinal axis of the airplane did not exceed approximately 25°. The minimum control airspeed was increased 5 knots more than that of the basic aircraft. Crosswind limits were examined and found to be comparable to the basic aircraft.

Parameter estimation of the flight test data revealed that the dihedral effect, directional stability, and rudder effectiveness were further reduced from wind-tunnel predictions. Despite this reduction, pilot comments during flight tests verified previous flying qualities analyses, indicating that throughout the cleared LASRE envelope, the flying qualities were virtually identical to that of the basic aircraft. After further simulation updates, transients caused by simultaneous SR-71 single-engine failure and aerospike-engine firings were reinvestigated at the test-firing points of Mach 0.9, 1.2, and 1.5. The resulting sideslip transients were also shown to be within limits. Transients caused by engine failure had an initial 2° sideslip at Mach numbers along the transonic and supersonic climb profile of the aircraft, revealing that the sideslip transients were significantly worse than those predicted with the wind-tunnel data (fig. 12). As a result, stability and control maneuvers that called for steady heading sideslips of 2° were eliminated for Mach numbers greater than 1.5.

Transonic Performance

A significant concern with the aircraft performance was the large transonic drag incurred by the addition of the LASRE pod to the SR-71 aircraft. Extensive effort was made in the wind tunnel to minimize the drag of the configuration and still meet other requirements. Nevertheless, the wind tunnel–predicted transonic drag of the LASRE configuration was as much as 70 percent higher than the baseline SR-71 drag. Even with this large drag increase, piloted simulations showed that the SR-71 airplane with the LASRE configuration could still theoretically accelerate to Mach 3.2 on a standard atmospheric temperature profile and have enough fuel for approximately 3 min at the test condition before having to return to base.

The simulation did include the J58 engine thrust enhancement, which was principally obtained by manually uptrimming the exhaust gas temperatures. The J58 engine thrust was also known to be highly dependent on ambient temperature. Piloted simulations showed transonic accelerations to Mach 1.3 on a day 10 °C warmer than the standard day would require an additional 11,000 lbm of fuel. This requirement would certainly limit the maximum Mach and altitude capability of the LASRE configuration. Based on recent baseline SR-71 flight data, the simulator was also suspected to overpredict the transonic J58 engine thrust. Therefore, with the uncertainties in the wind-tunnel drag predictions and the simulator propulsion model, flight test was used to obtain actual performance results.

The first flight of the LASRE configuration occurred on an unseasonably warm October day in which the ambient temperature at the transonic penetration altitude was 9 °C warmer than standard day. The transonic penetration consisted of level acceleration at an altitude of 27,000 ft, which was required for flutter clearance. The aircraft acceleration was considerably worse than expected. Because thrust was not measured on the aircraft, an excess-thrust performance analysis was done. Figure 13 shows flight data compared with flight-day temperature simulation data. The flight-measured excess thrust was approximately 0 lbf at approximately Mach 1 and was always less than predicted by simulation. Later flights verified that some of this difference was caused by inaccurate modeling of the temperature effects on the J58 thrust. Given the available resources, discerning how much of the performance underprediction was caused by errors in the wind-tunnel drag results or inaccuracy in the J58 engine thrust model was not possible. However, the LASRE configuration transonic performance was clearly very dependent on ambient temperature; and on “hot” days, obtaining desired test conditions may not be possible.

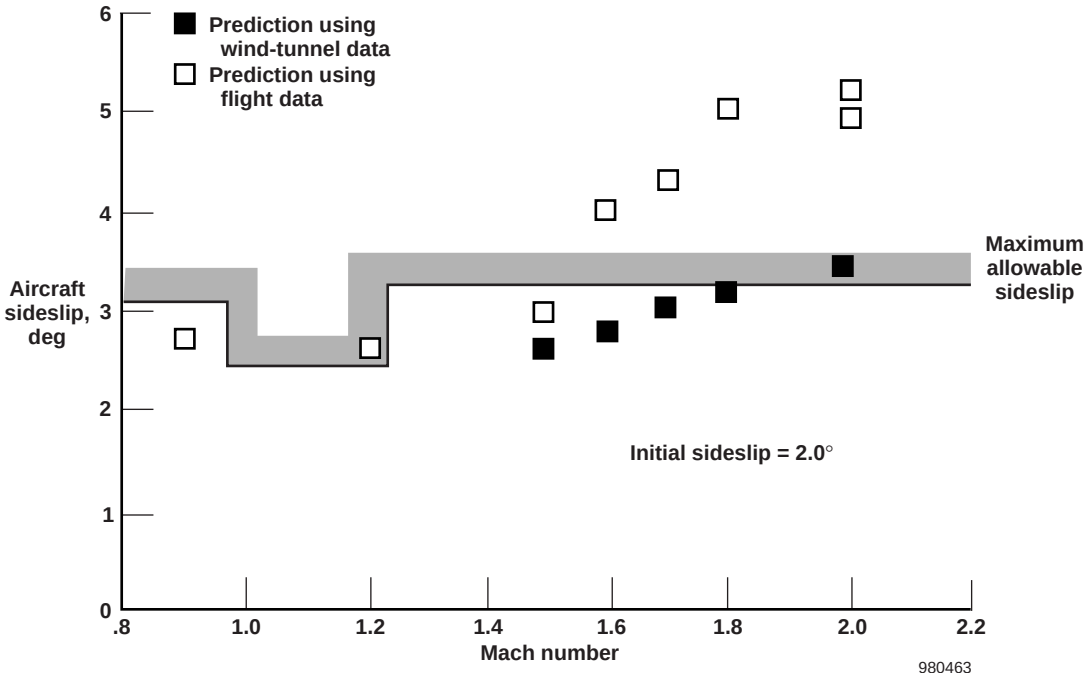

Figure 12. Comparison of wind-tunnel with flight-derived sideslip from an SR-71 engine out (2° initial sideslip).

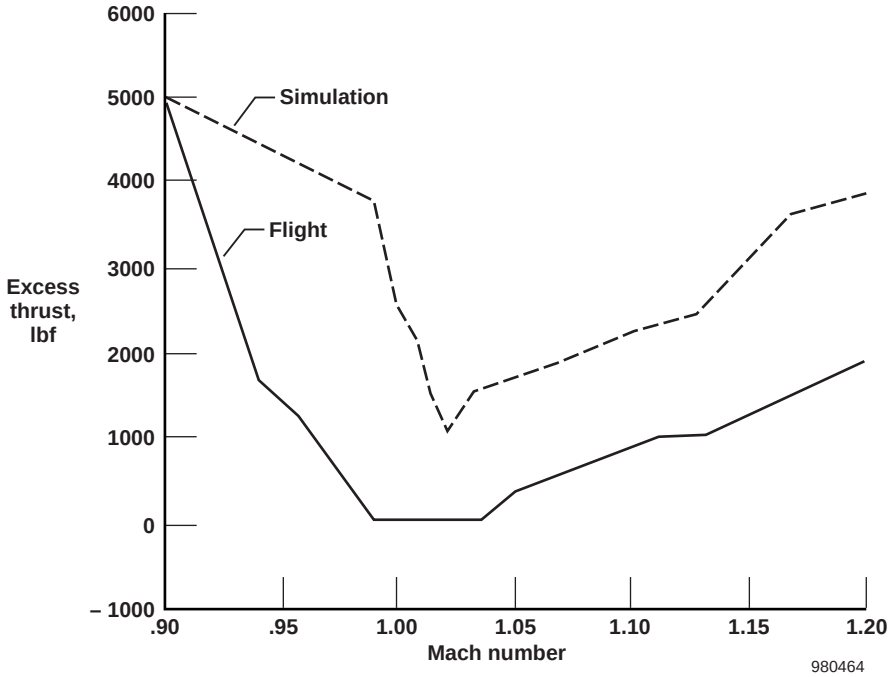

Figure 13. Flight data compared with flight-day temperature simulation data for the LASRE transonic acceleration at an altitude of 27,000 ft.

Structural Loads

Flight loads data were monitored in three areas for flight safety and to verify the predicted external design loads. The SR-71 twin rudders were instrumented to measure rudder bending, which was used to detect loads from pod-generated shock impingement and from single-engine trim forces. Bending moments on the leading edge of the pod reflection plane were measured to monitor for transonic structural divergence. Measurements at the pod aft attachment links to the SR-71 fuselage were used to determine sideslip limits.

No unusual loads were encountered on either the rudders or the reflection plane. Figure 14 shows in-flight axial loads on the two aft pod vertical attachment links as a function of aircraft angle of sideslip. The flight conditions are 453 knots equivalent airspeed (*KEAS*) and Mach 1.53. Extrapolated flight data predicts an allowable sideslip angle of 3.2° for a nose-left sideslip and 3.5° for a nose-right sideslip. These flight data, along with the J58 engine failure predictions from the simulator, were used to establish maximum Mach number flight envelope limitations.

Structural Dynamics

The major concern in the structural dynamics or flutter area was whether the presence of the LASRE would generate imbedded unsteady shocks in the transonic flight regime that could seriously degrade flutter speeds. Subsonic and supersonic linear flutter analyses predicted that the LASRE slightly increased some of the SR-71 flutter speeds, did not affect others, and did not introduce any new flutter mechanisms. Transonic flight is typically more flutter critical than either subsonic or supersonic conditions, but linear analyses are not reliable for transonic flight. Thus, flight flutter tests, in addition to the analyses, were deemed necessary to provide reasonable assurance of flight safety.

The combination of the poor transonic thrust characteristics of the SR-71 aircraft and the large transonic drag rise of the LASRE made the conventional approach of acquiring and evaluating aeroelastic response data at a large number of stabilized test points impractical. An alternative method had to be devised in which the critical aeroelastic response characteristics could be continuously excited and monitored during slow acceleration in level flight through the transonic region. Transonic dives, which would have been beneficial for the gravity assist, were not permitted until after envelope clearance because an SR-71 engine “unstart” or other failure during the dive would have resulted in the airplane decelerating into uncleared territory and possibly into an unknown transonic flutter dip.

Figure 4 shows the desired SR-71 research flight envelope with the LASRE installed. The low-speed portion bounded by 350 *KEAS* and Mach 0.80, indicated by analyses to be safe, was selected as the initial starting envelope. The plan was to perform one level acceleration from 350 to 430 *KEAS* at an altitude of 17,500 ft to clear the entire subsonic flight envelope to Mach 0.92 and to provide a Mach 0.90 climb corridor. Another constant-altitude acceleration run from 350 to 455 *KEAS* at an altitude of 27,000 ft would clear the transonic envelope from Mach 0.90 to 1.20, but only at altitudes higher than 27,000 ft. Successful clearance would also permit a gravity-assisting shallow dive starting at an altitude of 33,000 ft and ending at an altitude of 27,000 ft at speeds from Mach 0.95 to 1.15. Enough fuel would remain for a supersonic climb from an altitude of 27,000 ft to 37,000 ft at 455 *KEAS* (Mach 1.20 to 1.50).

If the aircraft achieved Mach 1.20, the drag coefficient would dramatically decrease, permitting the aircraft to climb normally. Attainment of Mach 1.50 at maximum dynamic pressure was deemed sufficient to clear the entire remaining portion of the supersonic flight envelope of flutter to Mach 3.20 without further flight testing. A second transonic, level acceleration run was also planned at an altitude of 25,000 ft in order to provide a little more leeway for the climb-dive maneuvers. The small part of the flight envelope beyond Mach 0.92 and at altitudes lower than 25,000 ft was left uncleared. This area was not needed for the flight experiments and was the most likely region of the entire flight envelope to encounter not only flutter problems, but stability and control problems as well.

Structural excitation consisted of a single pitch rap of the stick by the pilot at every 5-knot increase in equivalent airspeed during each acceleration run and at 1000-ft increments during the supersonic climb. Rehearsal flights of the SR-71 aircraft without the LASRE pod attached showed that these stick raps were excellent for exciting the fuselage first vertical-bending mode but not any of the other modes. This result was discouraging but accepted, because no practical alternative existed and at least the predicted “most critical” mode could be tracked.

The fuselage first vertical-bending mode has a certain aeroelastic characteristic in which its subcritical damping gradually decreases with increase in altitude

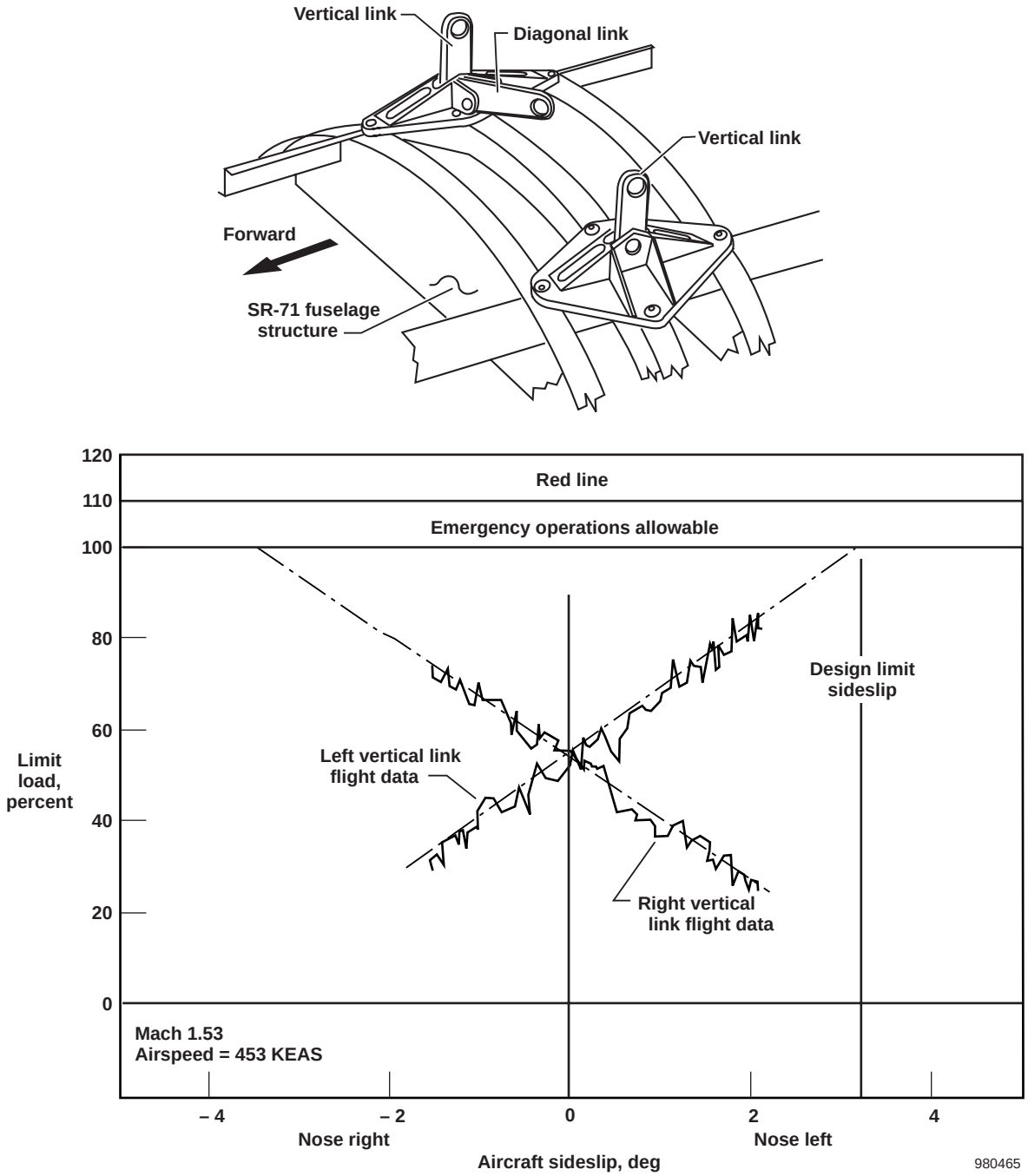

Figure 14. Flight loads on the pod aft attachment.

while its flutter speed is actually increasing. This declining decay rate in response to sudden inputs is caused by the decreasing density of the atmosphere with altitude and the natural loss of aerodynamic damping. Decreases in damping are also the major indicator of approaching flutter. This characteristic emphasizes the general importance of expanding flight envelopes at constant altitude in order to avoid confusion. For the LASRE program, the declining decay rate with altitude developed into an excellent pilot training aid during the rehearsal flights. The pilots' "seat-of-the-pants" awareness to changes in the SR-71 aeroelastic response characteristics was sharpened, as was their sense of when to expect the changes and, more importantly, when the changes might be unusual.

Acceleration for the flutter clearance maneuvers was specified to be no more than 1 knot/sec. Experience has shown that 95 percent of the actual flutter speeds must often be attained before an impending instability can be detected. At 1 knot/sec, approximately 20 sec might thus be available to detect decreases in damping from the responses from three stick raps at 5-sec intervals and warn the pilot to decelerate the aircraft before catastrophic flutter occurred.

The actual envelope expansion was carried out in two flights virtually as planned, simulated, and rehearsed. The SR-71 airplane with the LASRE installed was demonstrated without incident to be aeroelastically stable throughout its intended flight envelope. Figure 15 shows one interesting anomaly that was discovered. The LASRE model began sinusoidally oscillating, very cleanly and almost continuously, in yaw at approximately 9 Hz, as shown on the third trace from the left in figure 15. This sinusoidal oscillation would have been a clear indication of impending LASRE model roll-yaw flutter and possible disaster except that the model roll trace (second from the left in figure 15) remained broadband with no indication of coupling. The oscillations started shortly after takeoff and continued with small but unabated amplitudes throughout all subsonic flight, but tended to disappear during supersonic conditions.

The current hypothesis, yet to be proven, is that these oscillations were caused by alternating vortices shed from the bluff back end of the aerospike rocket motor driving the model in yaw. This hypothesis would require that the shedding frequency nearly coincide with the resonant yaw frequency of the model (9 Hz) when mounted on the flexible pedestal force balance. The oscillations remained extremely small and were not a flight safety issue.

However, the same may not be true for the X-33 vehicle and other RLVs if a similar phenomenon occurred. The shedding frequency of Strouhal vortices varies approximately inversely with the geometric scale ratio. The LASRE is approximately a 20 percent–scale, one-half-span model of the X-33 vehicle. For these X-33–type vehicles, a significant oscillating force in pitch at approximately 1 Hz or less just prior to landing could couple with their short period mode or flight controls for an interesting touchdown. Therefore, efforts are currently underway to study this unexpected discovery in detail.

Propellant Feed System and Aerospike Rocket Engine Performance

The LASRE propellant feed system and aerospike rocket engine have undergone a fairly extensive development process that included many cycles of test failures, major redesigns, and retesting, often at the component and subsystem levels. Some of the significant developmental problems that were overcome included major redesign of the main hydrogen feed valve because of a hydrogen embrittlement failure of the valve poppet, redesign of the liquid oxygen main feed valve because of leakage and inadequate control authority, air infiltration overwhelming the pod nitrogen purge, leaks in the liquid oxygen system, manufacturing defects in some of the controller electronics, inadequate water cooling of the rocket engine thrusters, and problems with various relief and flow valves. A major goal of this developmental process was to reach the point where igniting and hot-firing the rocket engine was safe.

The ignition and hot-fire ground tests were used, in part, to determine the exact timing between the flows of liquid oxygen, the TEA–TEB ignitor, and hydrogen. Because only slightly more than 0.5 sec of TEA–TEB is available, nearly perfect timing was critical. Particular attention needed to be paid to valve opening transients, flow establishment times, and detection red lines. For instance, if the TEA–TEB flow came too early, no ignition source would exist to start the oxygen-hydrogen combustion. If the TEA–TEB flow were too late, a vigorous oxygen and TEA–TEB reaction would not exist to ignite the oxygen and hydrogen. This timing issue is further complicated by the requirement that all eight combustion chambers simultaneously ignite. If any one chamber fails to ignite or sustain combustion, the main controller automatically shuts down the rocket engine. The propellant feed system flows 2.00 lbm/sec of gaseous hydrogen for 3.0 sec, 12.00 lbm/sec of liquid

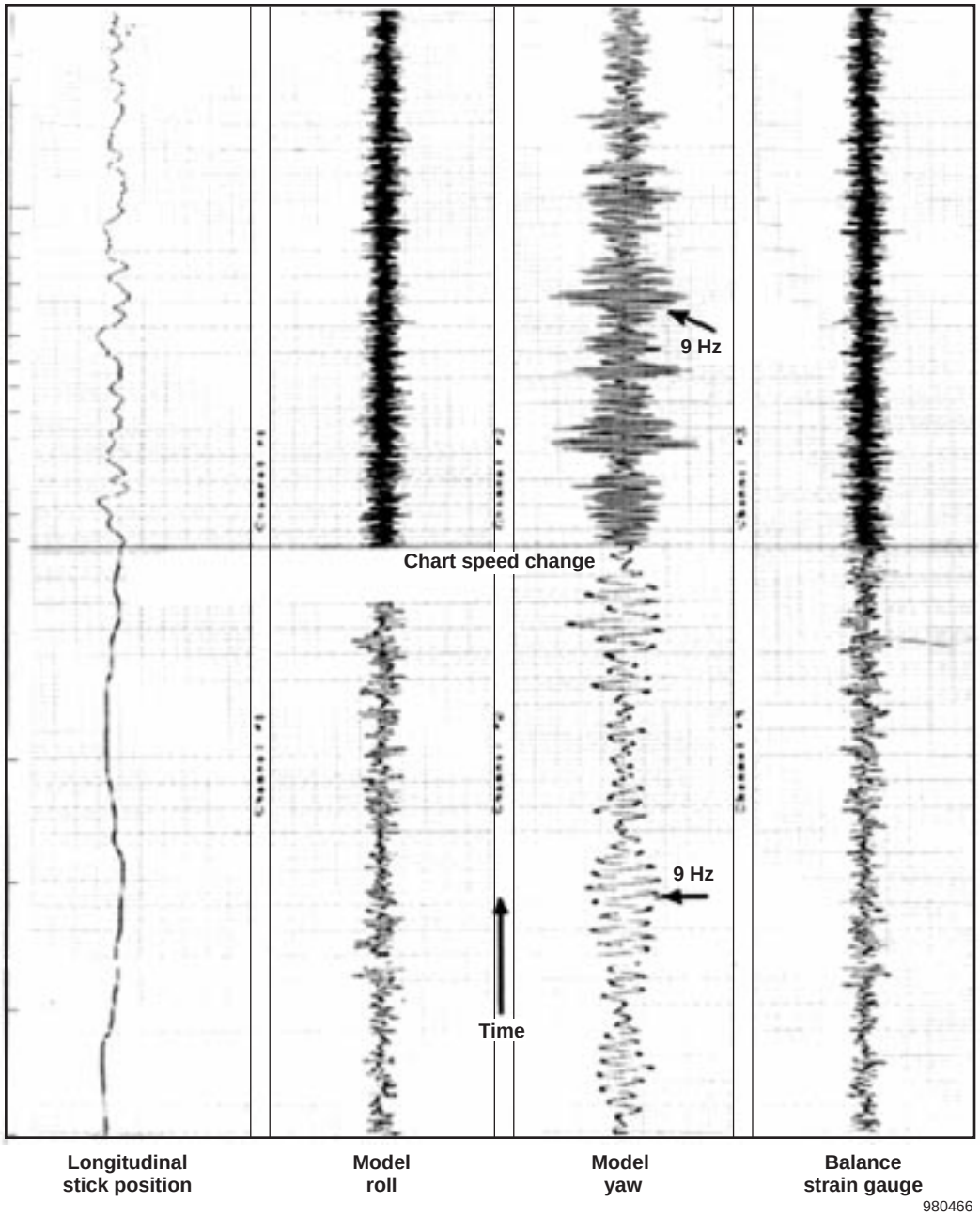

Figure 15. Model yaw oscillation in flight.

oxygen for 5.0 sec, 0.24 lbm/sec flow of TEA–TEB for 0.7 sec, and 40.00 lbm/sec of water for 6.4 sec.

Figure 16 shows a typical aerospike rocket engine start and shutdown sequence. Several helium purges are first actuated, including the TEA–TEB purge as shown. Then, the liquid oxygen and TEA–TEB valves are opened in rapid succession. All eight thrusters are checked for chamber pressure greater than 15 lbf/in^2 gauge. Then the hydrogen valve is opened, and the chamber pressures are again checked for combustion. After 3 sec of test time have elapsed, both the liquid oxygen and hydrogen valves are closed. The TEA–TEB valve is left open to purge the lines with helium, followed by three more TEA–TEB line "puff purges." Particular attention is given to purging the TEA–TEB lines because of the possibility of clogging the TEA–TEB injector orifices. As figure 16 shows, chamber pressures reached the desired levels of 200 lbf/in^2 absolute for this test, indicating appropriate hydrogen and liquid oxygen flow rates.

Figure 17 shows aerospike rocket engine cold-flow and hot-fire data. The top and bottom plots show TEA–TEB supply pressure and rocket engine chamber pressure, respectively, as a function of time. Ground and flight data are compared for a cold-flow test, and the agreement is excellent. The difference between the hot-fire and cold-flow data reflects having TEA–TEB in the system as opposed to just flowing helium and, of course, using hydrogen and liquid oxygen as opposed to helium and liquid nitrogen.

The performance of the LASRE rocket engine, integrated into the lifting-body configuration, was also assessed using both force-balance and surface pressure measurements. The six-component force balance measured the aerodynamic and rocket propulsive forces and moments on the model lifting-body configuration mounted above the reflection plane. Surface pressures measurements were available on the model lifting-body surfaces and on the rocket engine nozzle ramps, plug base, and cowls. The pressure measurements provided quantitative information on the altitude compensating feature of the aerospike rocket nozzle (for instance, the nozzle ramp repressurization and base region pressurization) and the significance of penalties caused by overexpansion around the nozzle cowls.

The aerospike rocket engine has been successfully ground-fired twice at the Research Laboratory using gaseous hydrogen and liquid oxygen. Chamber pressures in the eight thrusters averaged approximately 203 lbf/in^2. Thrust data from the force balance showed good agreement with the analytical prediction, as figure 18 shows. The force-balance data also showed a damped 7.5–Hz oscillation. The cause of the oscillation is unknown, but the oscillation was also seen in the Research Laboratory thrust stand measurement.

To date, the rocket engine has only been fired in flight using inert helium in place of hydrogen, combined with either liquid nitrogen or liquid oxygen. These cold-flow flight tests have been conducted at two flight conditions: Mach 1.2 and an altitude of 41,000 ft, and Mach 0.9 and an altitude of 31,000 ft. At the Mach 1.2 test point, approximately 400 lbf of installed thrust was measured during the cold-flow firing. The pressure on the base region of the rocket engine decreased by approximately 0.1 lbf/in^2 during the Mach 1.2 cold flow. For the

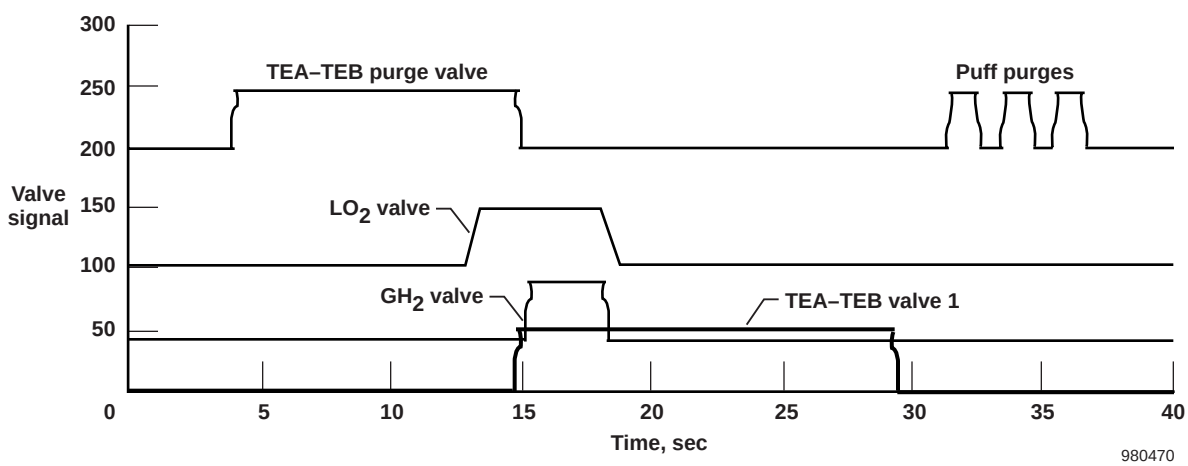

(a) Valve opening sequence.

Figure 16. Start and shutdown sequences of the aerospike rocket engine.

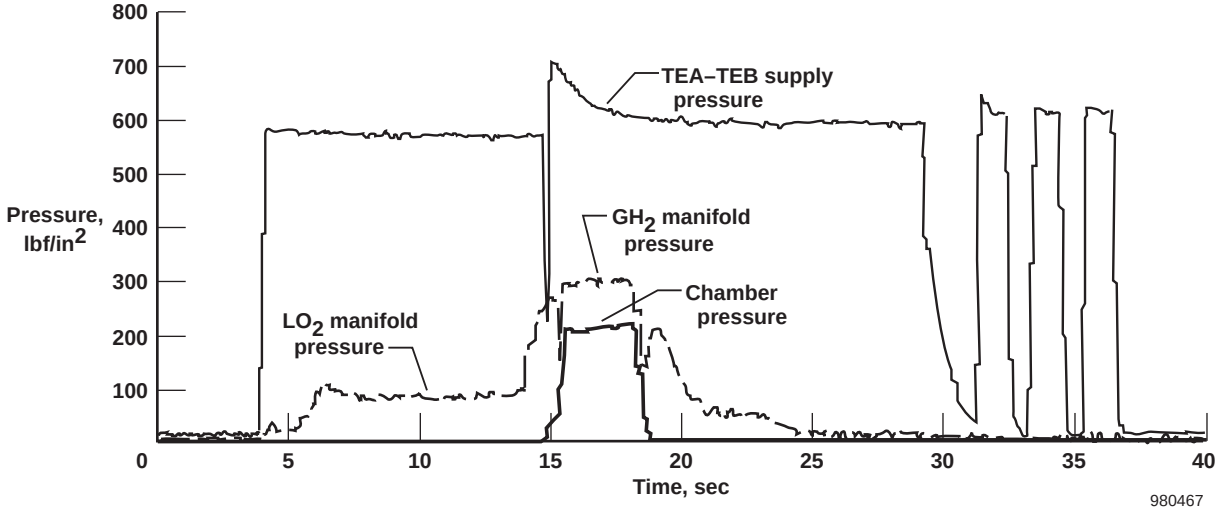

(b) Resulting pressures.

Figure 16. Concluded.

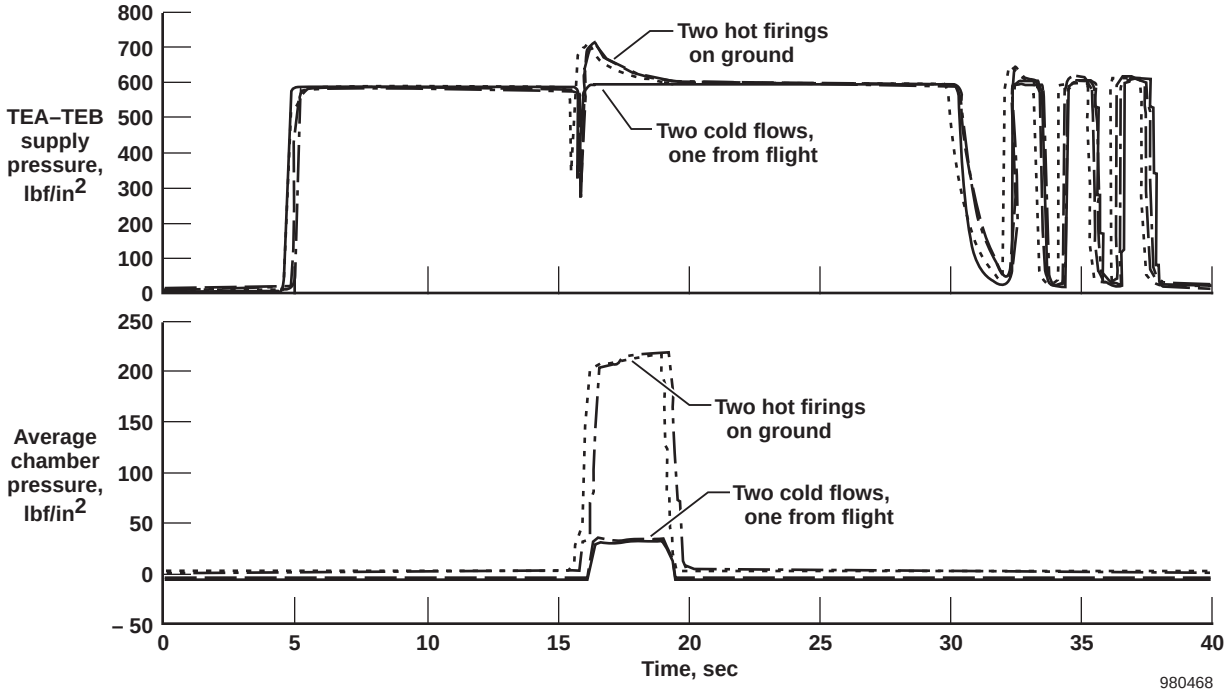

Figure 17. Comparison of ground and flight aerospike rocket engine data.

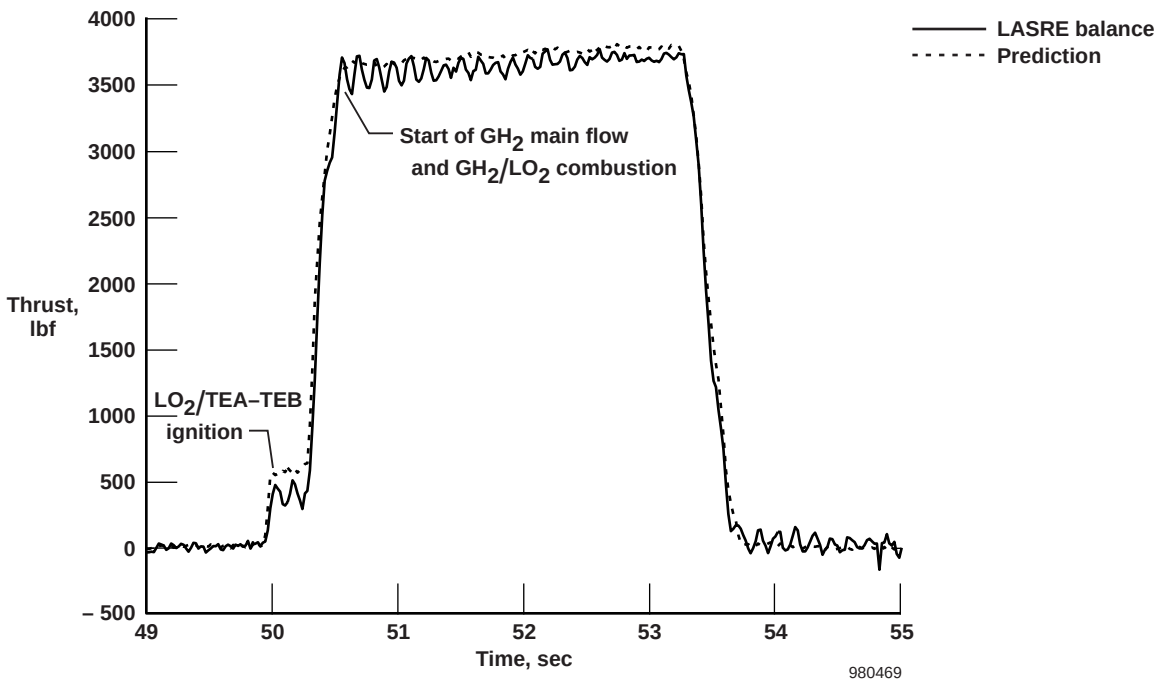

Figure 18. Comparison of force-balance measured thrust from hot-fire ground test with analytical prediction.

Mach 0.9 cold-flow firing, the base pressures were reduced by approximately 0.6 lbf/in^2 during the cold flow. This reduction resulted in a large base drag increment that negated any thrust generated during the cold-flow firing. The installed thrust, measured by the force balance at the Mach 0.9 test point, was essentially 0 lbf.

Concluding Remarks

The Linear Aerospike SR-71 Experiment (LASRE) flight test is still ongoing; the one elusive milestone to be completed is the “hot firing” of the aerospike rocket engine in flight. Additional confidence-building “cold-flow” ground and flight tests are being conducted to decrease the overall flight safety risk prior to this in-flight “hot firing.” In reflecting on some of the lessons learned from attempting a complex and hazardous flight test such as the LASRE, several lessons exist that may be applicable to other flight test programs.

First, when many different organizations are cooperating on a common flight test program, specific roles, responsibilities, and requirements for each organization must be very clearly defined. This clear definition is especially important when, as was the situation for the LASRE, the organizations have very different philosophies and requirements about acceptable risk and flight safety. The LASRE “cooperative agreement” was rather loose in defining these requirements, which often led to confusion, inefficiencies, and sometimes discontent among the organizations. That the organizations have an agreed-upon plan or philosophy for items such as configuration management, qualification testing, and material and assembly standards is critical.

Next, for LASRE-type, one-of-a-kind flight research efforts, attempting to “shortcut” the process by omitting the component- and systems-level testing and the checkout of developmental hardware and software can be a high risk endeavor. In the LASRE case, the schedule and cost impact was much greater in developing the hardware and software in the full system, rather than would have been at a lower systems level.

As a final item, the LASRE invested considerable time and effort on preflight preparation and training for control room engineers and aircrew. This preparation was accomplished through ground testing that was conducted to emulate flight procedures, rehearsal flights of the SR-71 airplane without the pod attached, “classroom” emergency procedures training, and, of course, flight simulator sessions. The result of this training was a control room staff and aircrew that were well-prepared to handle the anomalous, emergency, and unexpected situations that can be part of a hazardous flight test.

References

[1]Corda, Stephen, David P. Lux, Edward T. Schneider, and Robert R. Meyer, Jr., "Blackbird Puts LASRE to the Test," *Aerospace America*, Feb. 1998, pp. 24–29.

[2]Angelino, Gianfranco, "Approximate Method for Plug Nozzle Design," *AIAA Journal*, vol. 2, no. 10, Oct. 1964, pp. 1834–1835.

[3]Rockwell International Corporation, "Advanced Aerodynamic Spike Configurations: Volume 2—Hot-Firing Investigations," AFRPL-TR-67-246, Sept. 1967. (Distribution authorized to U. S. Government agencies and their contractors; other requests shall be referred to WL/FIMS Wright-Patterson AFB, Ohio 45433-6503.)

[4]Mueller, T. J. and W. P. Sule, "Basic Flow Characteristics of a Linear Aerospike Nozzle Segment," ASME-72-WA/Aero-2, Nov. 1972.

[5]Hill, Philip G. and Carl R. Peterson, *Mechanics and Thermodynamics of Propulsion*, Addison-Wesley Publishing Company, Reading, Massachusetts, 1992, pp. 538–540.

[6]Sutton, George P., *Rocket Propulsion Elements: An Introduction to the Engineering of Rockets*, 5th edition, John Wiley & Sons, New York, 1986, pp. 59–63.

[7]Ruf, J. H., "The Plume Physics Behind Aerospike Nozzle Altitude Compensation and Slipstream Effect," AIAA-97-3218, July 1997.

[8]Conners, Timothy R., *Predicted Performance of a Thrust Enhanced SR-71 Aircraft with an External Payload*, NASA TM-104330, 1997.

[9]Kutin, M. S., "Linear Aerospike SR-71 Experiment (LASRE) Rocket Engine," AIAA-97-3319, July 1997.

[10]Moes, Timothy R., Brent R. Cobleigh, Timothy H. Cox, Timothy R. Conners, Kenneth W. Iliff, and Bruce G. Powers, *Flight Stability and Control and Performance Results from the Linear Aerospike SR-71 Experiment (LASRE)*, NASA TM-1998-206565, 1998.

[11]Moes, Timothy R., Brent R. Cobleigh, Timothy R. Conners, Timothy H. Cox, Stephen C. Smith, and Norm Shirakata, *Wind-Tunnel Development of an SR-71 Aerospike Rocket Flight Test Configuration*, NASA TM-4749, 1996.

[12]Maine, Richard E. and Kenneth W. Iliff, *Application of Parameter Estimation to Aircraft Stability and Control: The Output-Error Approach*, NASA RP-1168, 1986.

[13]Murray, James E. and Richard E. Maine, *pEst Version 2.1 User's Manual*, NASA TM-88280, 1987.

REPORT DOCUMENTATION PAGE

Form Approved
OMB No. 0704-0188

Public reporting burden for this collection of information is estimated to average 1 hour per response, including the time for reviewing instructions, searching existing data sources, gathering and maintaining the data needed, and completing and reviewing the collection of information. Send comments regarding this burden estimate or any other aspect of this collection of information, including suggestions for reducing this burden, to Washington Headquarters Services, Directorate for Information Operations and Reports, 1215 Jefferson Davis Highway, Suite 1204, Arlington, VA 22202-4302, and to the Office of Management and Budget, Paperwork Reduction Project (0704-0188), Washington, DC 20503.

1. AGENCY USE ONLY (Leave blank)

2. REPORT DATE
September 1998

3. REPORT TYPE AND DATES COVERED
Technical Memorandum

4. TITLE AND SUBTITLE
Flight Testing the Linear Aerospike SR-71 Experiment (LASRE)

5. FUNDING NUMBERS
WU 242-33-02-00-23-T15

6. AUTHOR(S)
Stephen Corda, Bradford A. Neal, Timothy R. Moes, Timothy H. Cox,
Richard C. Monaghan, Leonard S. Voelker, Griffin P. Corpening,
Richard R. Larson, and Bruce G. Powers

7. PERFORMING ORGANIZATION NAME(S) AND ADDRESS(ES)
NASA Dryden Flight Research Center
P.O. Box 273
Edwards, California 93523-0273

8. PERFORMING ORGANIZATION REPORT NUMBER
H-2280

9. SPONSORING/MONITORING AGENCY NAME(S) AND ADDRESS(ES)
National Aeronautics and Space Administration
Washington, DC 20546-0001

10. SPONSORING/MONITORING AGENCY REPORT NUMBER
NASA/TM-1998-206567

11. SUPPLEMENTARY NOTES
Presented at 30th Anniversary Symposium of the Society of Flight Test Engineers, Inc., September 15–17, 1998, Reno, Nevada. Stephen Corda, Bradford Neal, Timothy Moes, Timothy Cox, Richard Monaghan, Leonard Voelker, Griffin Corpening, Richard Larson, NASA Dryden Flight Research, Edwards, CA; and Bruce Powers, Analytical Services and Materials, Inc., Hampton, VA.

12a. DISTRIBUTION/AVAILABILITY STATEMENT
Unclassified—Unlimited
Subject Category 07

12b. DISTRIBUTION CODE

13. ABSTRACT (Maximum 200 words)

The design of the next generation of space access vehicles has led to a unique flight test that blends the space and flight research worlds. The new space vehicle designs, such as the X-33 vehicle and Reusable Launch Vehicle (RLV), are powered by linear aerospike rocket engines. Conceived of in the 1960's, these aerospike engines have yet to be flown, and many questions remain regarding aerospike engine performance and efficiency in flight. To provide some of these data before flying on the X-33 vehicle and the RLV, a spacecraft rocket engine has been flight-tested atop the NASA SR-71 aircraft as the Linear Aerospike SR-71 Experiment (LASRE). A 20 percent–scale, semispan model of the X-33 vehicle, the aerospike engine, and all the required fuel and oxidizer tanks and propellant feed systems have been mounted atop the SR-71 airplane for this experiment. A major technical objective of the LASRE flight test is to obtain installed-engine performance flight data for comparison to wind-tunnel results and for the development of computational fluid dynamics–based design methodologies. The ultimate goal of firing the aerospike rocket engine in flight is still forthcoming. An extensive design and development phase of the experiment hardware has been completed, including approximately 40 ground tests. Five flights of the LASRE and firing the rocket engine using inert liquid nitrogen and helium in place of liquid oxygen and hydrogen have been successfully completed.

14. SUBJECT TERMS
Flight test, Flight tests using hydrogen fuel, Linear aerospike rocket engines, SR-71, X-33 space vehicle.

15. NUMBER OF PAGES
27

16. PRICE CODE
A03

17. SECURITY CLASSIFICATION OF REPORT	18. SECURITY CLASSIFICATION OF THIS PAGE	19. SECURITY CLASSIFICATION OF ABSTRACT	20. LIMITATION OF ABSTRACT
Unclassified	Unclassified	Unclassified	Unlimited