NASA/TM-2003-210742

# Experimental Evaluation of Hot Films on Ceramic Substrates for Skin-Friction Measurement

*Gregory K. Noffz*
*NASA Dryden Flight Research Center*
*Edwards, California*

*Adrienne S. Lavine*
*University of California, Los Angeles*
*Los Angeles, California*

*Philip J. Hamory*
*NASA Dryden Flight Research Center*
*Edwards, California*

**March 2003**

## The NASA STI Program Office…in Profile

Since its founding, NASA has been dedicated to the advancement of aeronautics and space science. The NASA Scientific and Technical Information (STI) Program Office plays a key part in helping NASA maintain this important role.

The NASA STI Program Office is operated by Langley Research Center, the lead center for NASA's scientific and technical information. The NASA STI Program Office provides access to the NASA STI Database, the largest collection of aeronautical and space science STI in the world. The Program Office is also NASA's institutional mechanism for disseminating the results of its research and development activities. These results are published by NASA in the NASA STI Report Series, which includes the following report types:

- TECHNICAL PUBLICATION. Reports of completed research or a major significant phase of research that present the results of NASA programs and include extensive data or theoretical analysis. Includes compilations of significant scientific and technical data and information deemed to be of continuing reference value. NASA's counterpart of peer-reviewed formal professional papers but has less stringent limitations on manuscript length and extent of graphic presentations.

- TECHNICAL MEMORANDUM. Scientific and technical findings that are preliminary or of specialized interest, e.g., quick release reports, working papers, and bibliographies that contain minimal annotation. Does not contain extensive analysis.

- CONTRACTOR REPORT. Scientific and technical findings by NASA-sponsored contractors and grantees.

- CONFERENCE PUBLICATION. Collected papers from scientific and technical conferences, symposia, seminars, or other meetings sponsored or cosponsored by NASA.

- SPECIAL PUBLICATION. Scientific, technical, or historical information from NASA programs, projects, and mission, often concerned with subjects having substantial public interest.

- TECHNICAL TRANSLATION. English-language translations of foreign scientific and technical material pertinent to NASA's mission.

Specialized services that complement the STI Program Office's diverse offerings include creating custom thesauri, building customized databases, organizing and publishing research results…even providing videos.

For more information about the NASA STI Program Office, see the following:

- Access the NASA STI Program Home Page at ***http://www.sti.nasa.gov***

- E-mail your question via the Internet to help@sti.nasa.gov

- Fax your question to the NASA Access Help Desk at (301) 621-0134

- Telephone the NASA Access Help Desk at (301) 621-0390

- Write to:
  NASA Access Help Desk
  NASA Center for AeroSpace Information
  7121 Standard Drive
  Hanover, MD 21076-1320

NASA/TM-2003-210742

# Experimental Evaluation of Hot Films on Ceramic Substrates for Skin-Friction Measurement

*Gregory K. Noffz*
*NASA Dryden Flight Research Center*
*Edwards, California*

*Adrienne S. Lavine*
*University of California, Los Angeles*
*Los Angeles, California*

*Philip J. Hamory*
*NASA Dryden Flight Research Center*
*Edwards, California*

National Aeronautics and
Space Administration

Dryden Flight Research Center
Edwards, California 93523-0273

**March 2003**

NOTICE

Use of trade names or names of manufacturers in this document does not constitute an official endorsement of such products or manufacturers, either expressed or implied, by the National Aeronautics and Space Administration.

Available from the following:

NASA Center for AeroSpace Information (CASI)
7121 Standard Drive
Hanover, MD 21076-1320
(301) 621-0390

National Technical Information Service (NTIS)
5285 Port Royal Road
Springfield, VA 22161-2171
(703) 487-4650

# ABSTRACT

An investigation has been performed on the use of low-thermal conductivity, ceramic substrates for hot films intended to measure skin friction. Hot films were deposited on two types of ceramic substrates. Four hot films used composite-ceramic substrates with subsurface thermocouples (TCs), and two hot films were deposited on thin Macor® substrates. All six sensors were tested side by side in the wall of the NASA Glenn Research Center 8-ft by 6-ft Supersonic Wind Tunnel (SWT). Data were obtained from zero flow to Mach 1.98 in air. Control measurements were made with three Preston tubes and two boundary-layer rakes. The tests were repeated at two different hot film power levels. All hot films and subsurface TCs functioned throughout the three days of testing. At zero flow, the films on the high-thermal conductivity Macor® substrates required approximately twice the power as those on the composite-ceramic substrates. Skin-friction results were consistent with the control measurements. Estimates of the conduction heat losses were made using the embedded TCs but were hampered by variability in coating thicknesses and TC locations.


# NOMENCLATURE

## Acronyms

| | |
|---|---|
| APSO | adjustable-protrusion surface-obstacle |
| BL | boundary layer |
| HRSI | high-temperature reusable surface insulation |
| NASA | National Aeronautics and Space Administration |
| RCG | reaction cured glass |
| RTD | resistance temperature detector |
| SWT | 8-ft by 6-ft Supersonic Wind Tunnel |
| TC | thermocouple |

## Symbols

| | |
|---|---|
| $A$ | calibration constant slope, $(\rho_w \tau_w)^{1/3}/(I^2 R/\Delta T)$ |
| $B$ | calibration constant offset, $(\rho_w \tau_w)^{1/3}$ |
| $C_p$ | specific heat, J/kgK |
| $I$ | hot film current, amps |
| $k$ | thermal conductivity, W/mK |
| $R$ | electrical resistance, $\Omega$ |
| $t$ | time, sec |
| $T$ | temperature, K |
| $\alpha$ | thermal diffusivity, $m^2/s$ |

| | |
|---|---|
| $\Delta T$ | temperature difference between film and fluid, K |
| $\rho$ | density, kg/m$^3$ |
| $\tau_w$ | wall shear stress, N/m$^2$ |
| $\mu$ | dynamic viscosity, kg/ms |
| $\perp$ | perpendicular |

## Subscripts

| | |
|---|---|
| f | fluid property |
| s | substrate property |
| w | wall property |

## INTRODUCTION

Measuring skin friction on the surfaces of wind tunnel models, aircraft, watercraft, and other vehicles is crucial to validating computational fluid dynamics and boundary-layer codes. Skin-friction measurement is also crucial to characterizing the effectiveness of skin-friction reduction schemes. Accurate skin-friction measurements are generally more difficult to attain than more fundamental flow measurements such as pressure and temperature. The available methods of skin-friction measurement include floating-element gages,[1,2,3,4] total pressure rakes to determine boundary-layer profiles,[5] Stanton gages or Preston tubes to measure the difference between total and static pressure at the surface,[6,7] the observation of oil flow on the surface,[8] and surface-mounted hot films.[9,10,11] Of these methods, floating-element gages are the most direct method of measurement, but they still require a static calibration. All other methods are indirect and require some type of flow calibration or analysis. These calibrations are usually dependent on flow conditions (that is, Reynolds number, laminar as opposed to turbulent, subsonic as opposed to supersonic). Supplementary measurements often are required to determine the flow condition and then determine the calibration to use.

Hot film sensors, consisting of a metallic film on an electrically nonconducting substrate, have been used to measure skin friction as early as 1931.[12] The film is kept at a fixed elevated temperature relative to that of the local flow, and the required electrical power is measured. The rate of heat transfer to the flow is related to the velocity gradient at the surface, which in turn is related to the skin friction. Because of their small thermal mass, hot films quickly respond to fluctuations in the local flow and thus are used to determine flow direction (with multiple hot films) and local flow regime (laminar, transitional, or turbulent). Fabricating hot film substrates from low-thermal conductivity ceramics serves to decrease heat conduction to the substrate. Furthermore, the layered nature of the fabrication allows the installation of thermocouple (TC) junctions underneath the hot film, which can provide additional information on the conduction heat loss.

When the hot film is used to measure skin friction, the heat supplied to maintain an elevated temperature is related to skin friction by a variety of calibrations stemming from both experiment and analysis. Most are of the following form[13]

$$(\rho_w \tau_w)^{1/3} = A\left(\frac{I^2 R}{\Delta T}\right) - B \tag{1}$$

where $\Delta T$ is the temperature difference between the film and the fluid. The information available from the hot film anemometry is the total heat dissipated from the film ($I^2R$). This information includes not only heat transferred directly to the fluid, but also heat conducted to the substrate accounted for by $B$ in eq. 1. The distance the heat penetrates into the substrate increases with increasing substrate conductivity. Any substrate will allow some heat to conduct parallel to the surface before it is removed by the fluid, thus increasing the "effective length" of the hot film in the streamwise direction. The parameter $A$ varies inversely with the effective length.[13,14] Thus, a hot film substrate with a high-thermal conductivity will have lower sensitivity (lower $A$) and a larger conduction heat loss (larger $B$). All hot film skin-friction measurements must overcome this complication. The use of a low-thermal conductivity substrate can reduce $B$ and increase $A$, making the hot film more sensitive to changes in skin friction.

This research investigates the possible advantages of using low-thermal conductivity ceramics for hot film substrates. Hot films were deposited on two types of ceramic substrates. The first is a homogeneous substrate fabricated from Macor® (Corning, Inc., Corning, New York), a commercially available, machinable ceramic. The second is a composite-ceramic substrate composed of high-temperature reusable surface insulation (HRSI), a porous, low-density ($\rho$ = 352 kg/m$^3$) ceramic, and coated with reaction cured glass (RCG), a high-density, nonporous glass. The RCG provides a tough exterior, and the composite nature of the substrate allows for the installation of small TCs under the coating. The TCs are positioned under the hot film and potentially can be used to estimate conduction heat loss. The ceramic substrates will reduce the conduction heat loss, hopefully leading to increased sensitivity and a gage better suited for measuring changes in skin friction.

A previous report[15] documented conjugate heat transfer studies of hot films on composite-ceramic, Macor®, and quartz substrates. Time step constraints prevented modeling of the high-speed flows seen in the tunnel experiment described in the succeeding paragraphs; however, the modeling that was done confirmed the trend toward smaller film effective lengths with decreasing thermal conductivity. The thermal properties are presented in the next section.

This report presents results from the hot film tests conducted in the NASA Glenn Research Center (Cleveland, Ohio) 8-ft by 6-ft Supersonic Wind Tunnel (SWT). Data from zero flow to Mach 1.98 in air were obtained and repeated (for some of the films) at different hot film overheats.

## SENSOR DESCRIPTION

The composite-ceramic substrate is a cylinder, 12.70 mm in diameter and 15.88 mm long. Figure 1 shows a cross-sectional view. The RCG coating (approximately 0.127 mm thick) extends over the face of the cylinder and approximately one-third of the way down the sides, thus providing a surface on which the metallic hot film can be deposited. Figure 2 shows one of the hot film sensors (designated "CC1") on a composite-ceramic substrate. The sensor is potted into the white Macor® sleeve. The RCG coating is so thin that the three TC junctions are visible underneath. The hot film runs perpendicular to the lands of the TCs, and the hot film leads run down the sides of the substrate to the end of the RCG coating. Small gage wires are attached to the end of the leads with electrically conductive epoxy.

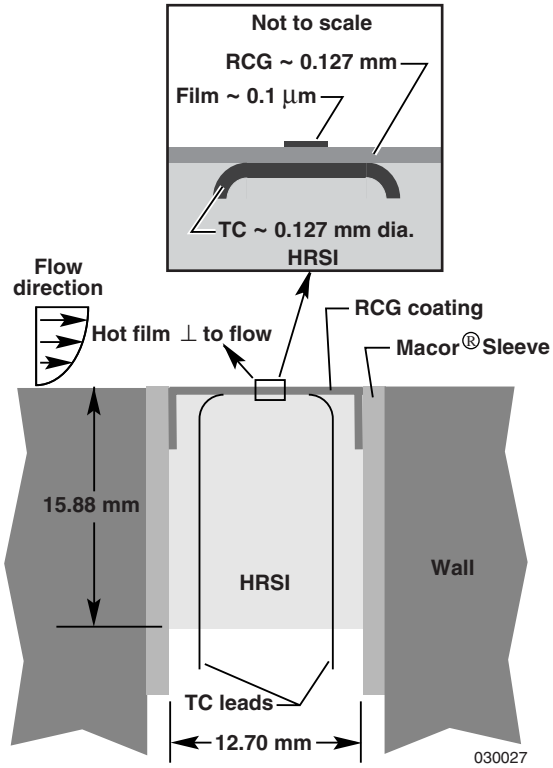


Figure 1. Cross section of composite-ceramic hot film.

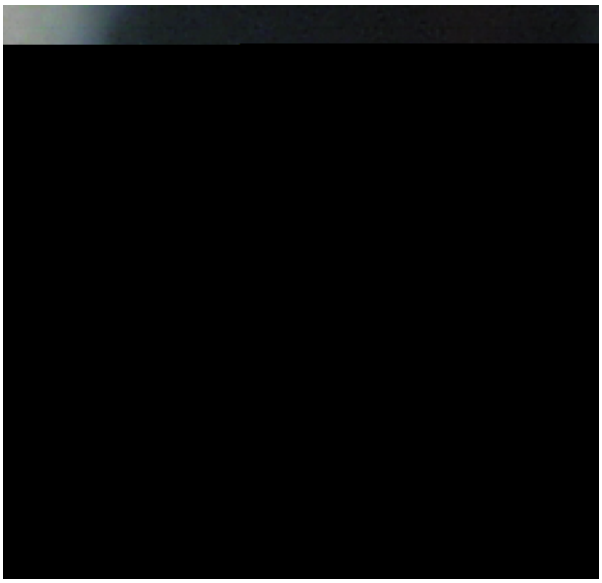

Figure 2. Hot film on composite-ceramic substrate.

The middle TC temperature of CC3 is approximately equal to, yet lower than, the right and left TC temperatures, which probably reflects a nonuniform RCG coating thickness. Likewise, the right TC of CC4 is the warmest of the CC4 TCs throughout the test, indicating that the right TC is under a thinner RCG coating. Variations in coating thicknesses and uncertainties in the precise locations of the TC junctions create difficulty in estimating the conduction heat loss component for these particular prototypes. Nevertheless, improvements in packaging and coating control offer promise in this regard.

The higher temperature measured by the middle TC of CC2, relative to the middle TCs of the other composite-ceramic sensors, indicates that heat is being conducted away from the films through the TC wire, particularly in the case of CC1, CC3, and CC4 where the TC wire is perpendicular to the films. These additional conduction paths raise the issue of whether or not the presence of the TCs is helping to thwart the advantage of the low-thermal conductivity substrates. Testing another composite-ceramic hot film without subsurface TCs installed would have been enlightening, but none was fabricated for this test.

## CONCLUSIONS

Four novel hot films on low-thermal conductivity ceramic substrates with subsurface TCs, along with two hot films on machinable ceramic substrates, were fabricated and tested in a supersonic wind tunnel. Skin-friction results from two of the hot films on low-thermal conductivity substrates matched the control measurement, from Mach 0.25 to nearly Mach 2, to within 3 percent. For the other two hot films on low-thermal conductivity substrates, packaging and tunnel integration shortcomings might have led to large discrepancies at supersonic Mach numbers; however, these sensors matched the control measurement better at subsonic points than at supersonic points. The hot films on low-thermal conductivity substrates showed lower zero-flow heat losses and offsets than those of the hot films on machinable ceramic substrates. The subsurface TCs in the low-thermal conductivity substrates were installed to estimate the conduction heat loss from the films. While the results are intriguing, coating tolerance and TC position uncertainties prevented conduction estimates from these prototypes.

## REFERENCES


1. Frei, D. and H. Thomann, “Direct measurements of skin friction in a turbulent boundary layer with a strong adverse pressure gradient,” *Journal of Fluid Mechanics*, vol. 101, pt. 1, 1980, pp. 79–95.

2. Garringer, Darwin J. and Edwin J. Saltzman, *Flight Demonstration of a Skin-Friction Gage to a Local Mach Number of 4.9*, NASA TN D-3830, Feb. 1967.

3. Mabey, Dennis G. and Laurie Gaudet, “Performance of Small Skin Friction Balances at Supersonic Speeds,” *Journal of Aircraft*, vol. 12, no. 10, Oct. 1975, pp. 819–825.

4. Schmidt, Martin A., Roger T. Howe, Stephen D. Senturia, and Joseph H. Haritonidis, “Design and Calibration of a Microfabricated Floating-Element Shear-Stress Sensor,” *IEEE Transactions on Electron Devices*, vol. 35, no. 6, June 1988, pp. 750–757.

5. Clauser, Francis H., “Turbulent Boundary Layers in Adverse Pressure Gradients,” *Journal of Aeronautical Science*, vol. 21, no. 91, Feb. 1954, pp. 91–108.

6. Allen, Jerry M., *Reevaluation of Compressible-Flow Preston Tube Calibrations*, NASA TM X-3488, March 1977.

7. Preston, J.H., "The Determination of Turbulent Skin Friction by Means of Pitot Tubes," *Journal of the Royal Aeronautical Society*, vol. 58, no. 518, Feb. 1954, pp. 109–121.

8. Zilliac, Gregory G., *Further Developments of the Fringe-Imaging Skin-Friction Technique*, NASA TM 110425, Dec. 1996.

9. Liepmann, H.W. and G.T. Skinner, *Shearing-Stress Measurements by Use of a Heated Element*, NACA TN 3268, 1954.

10. Ludwieg, H., *Instrument for Measuring the Wall Shearing Stress of Turbulent Boundary Layers*, NACA TM 1284, 1950.

11. Ludwieg, H. and W. Tillmann, *Investigations of the Wall-Shearing Stress in Turbulent Boundary Layers*, NACA TM 1285, May 1950.

12. Fage, A. and V.M. Falkner, "On the Relation Between Heat Transfer and Surface Friction for Laminar Flow," *Aeronautical Research Council R&M No. 1408*, London, 1931.

13. Hanratty, Thomas J. and Jay A. Campbell, "Measurement of Wall Shear Stress" in *Fluid Mechanics Measurements*, ed. by Richard J. Goldstein, Taylor & Francis, Bristol, Pennsylvania, 1996, pp. 590–611.

14. Bellhouse, B.J. and D.L. Schultz, "Determination of mean and dynamic skin friction, separation and transition in low-speed flow with a thin-film heated element," *Journal of Fluid Mechanics*, vol. 24, pt. 2, 1966, pp. 379–400.

15. Noffz, Gregory K. and Adrienne S. Lavine, "Finite Element Studies of Hot-Films for Skin-Friction Measurement," *Proceedings of the 5th ASME/JSME Joint Thermal Engineering Conference*, AJTE99-6147, San Diego, California, March 1999.

16. Liang, P.W. and K.D. Cole, "Transient Conjugated Heat Transfer From a Rectangular Hot Film," *Journal of Thermophysics and Heat Transfer*, vol. 6, no. 2, April–June 1992, pp. 349–355.

17. Chiles, Harry R., *The Design and Use of a Temperature-Compensated Hot-Film Anemometer System for Boundary-Layer Flow Transition Detection on Supersonic Aircraft*, NASA TM 100421, May 1988.

18. Soeder, Ronald H., *NASA Lewis 8- By 6-Foot Supersonic Wind Tunnel User Manual*, NASA TM 105771, Feb. 1993.

19. Hakkinen, Raimo J., Jeremy S. Neubauer, Philip J. Hamory, Trong T. Bui, and Gregory K. Noffz, "Exploratory Calibration of Adjustable-Protrusion Surface-Obstacle (APSO) Skin Friction Vector Gage," *41st Aerospace Sciences Meeting and Exhibit*, AIAA 2003-0740, Reno, Nevada, Jan. 6–9, 2003.

20. Bui, Trong T., David L. Oates, and Jose C. Gonsalez, *Design and Evaluation of a New Boundary-Layer Rake for Flight Testing*, NASA TM-2000-209014, Jan. 2000.

21. Bradshaw, P. and K. Unsworth, "Comment on 'Evaluation of Preston Tube Calibration Equations in Supersonic Flow,'" *AIAA Journal*, vol. 12, no. 9, Sept. 1974, pp. 1293–1296.

# REPORT DOCUMENTATION PAGE

Form Approved
OMB No. 0704-0188

Public reporting burden for this collection of information is estimated to average 1 hour per response, including the time for reviewing instructions, searching existing data sources, gathering and maintaining the data needed, and completing and reviewing the collection of information. Send comments regarding this burden estimate or any other aspect of this collection of information, including suggestions for reducing this burden, to Washington Headquarters Services, Directorate for Information Operations and Reports, 1215 Jefferson Davis Highway, Suite 1204, Arlington, VA 22202-4302, and to the Office of Management and Budget, Paperwork Reduction Project (0704-0188), Washington, DC 20503.

**1. AGENCY USE ONLY (Leave blank)**

**2. REPORT DATE**
March 2003

**3. REPORT TYPE AND DATES COVERED**
Technical Memorandum

**4. TITLE AND SUBTITLE**
Experimental Evaluation of Hot Films on Ceramic Substrates for Skin-Friction Measurement

**5. FUNDING NUMBERS**
WU 710 55 04 SE RR 00 FTT

**6. AUTHOR(S)**
Gregory K. Noffz, Adrienne S. Lavine, and Philip J. Hamory

**7. PERFORMING ORGANIZATION NAME(S) AND ADDRESS(ES)**
NASA Dryden Flight Research Center
P.O. Box 273
Edwards, California 93523-0273

**8. PERFORMING ORGANIZATION REPORT NUMBER**
H-2517

**9. SPONSORING/MONITORING AGENCY NAME(S) AND ADDRESS(ES)**
National Aeronautics and Space Administration
Washington, DC 20546-0001

**10. SPONSORING/MONITORING AGENCY REPORT NUMBER**
NASA/TM-2003-210742

**11. SUPPLEMENTARY NOTES**
Also presented at the 6th ASME-JSME Thermal Engineering Joint Conference, Hawaii Island, Hawaii, March 16–20, 2003.

**12a. DISTRIBUTION/AVAILABILITY STATEMENT**
Unclassified—Unlimited
Subject Category 34

This report is available at http://www.dfrc.nasa.gov/DTRS/

**12b. DISTRIBUTION CODE**

**13. ABSTRACT (Maximum 200 words)**

An investigation has been performed on the use of low-thermal conductivity, ceramic substrates for hot films intended to measure skin friction. Hot films were deposited on two types of ceramic substrates. Four hot films used composite-ceramic substrates with subsurface thermocouples (TCs), and two hot films were deposited on thin Macor® substrates. All six sensors were tested side by side in the wall of the NASA Glenn Research Center 8-ft by 6-ft Supersonic Wind Tunnel (SWT). Data were obtained from zero flow to Mach 1.98 in air. Control measurements were made with three Preston tubes and two boundary-layer rakes. The tests were repeated at two different hot film power levels. All hot films and subsurface TCs functioned throughout the three days of testing. At zero flow, the films on the high-thermal conductivity Macor® substrates required approximately twice the power as those on the composite-ceramic substrates. Skin-friction results were consistent with the control measurements. Estimates of the conduction heat losses were made using the embedded TCs but were hampered by variability in coating thicknesses and TC locations.

**14. SUBJECT TERMS**
Ceramic substrates, Hot film, Hot film calibration, Hot film substrates, Skin friction

**15. NUMBER OF PAGES**
25

**16. PRICE CODE**
A03

**17. SECURITY CLASSIFICATION OF REPORT**
Unclassified

**18. SECURITY CLASSIFICATION OF THIS PAGE**
Unclassified

**19. SECURITY CLASSIFICATION OF ABSTRACT**
Unclassified

**20. LIMITATION OF ABSTRACT**
Unlimited